Ledinaire Wall-mounted WL060V

WL060V LED11S/830 PSU II WH

830 warm white - Power supply unit - Safety class II (II) - White

The Ledinaire range contains a selection of popular off-the-shelf LED luminaires, each of which come with the high Philips quality levels and competitive price. Reliable, energy-efficient and affordable – just what you need.

Product data

General Information	
Beam angle of light source	120 °
Light source colour	830 warm white
Light source replaceable	No
Number of gear units	1 unit
Driver/power unit/transformer	PSU [Power supply unit]
Driver included	Yes
Optic type	120 [Beam angle 120°]
Luminaire light beam spread	120°
Control interface	-
Connection	PI [Push-in connector 3-pole]
Cable	-
Protection class IEC	Safety class II (II)
Glow-wire test	650/30 [Temperature 650 °C, duration 30 s]
Flammability mark	NO [-]
CE mark	CE mark
ENEC mark	-
Warranty period	3 years

Remarks	*- According to the Lighting Europe guidance paper 'Evaluating performance of LED based luminaires – January 2018': statistically there is no relevant difference in lumen maintenance between the B50 and, for example, the B10. Therefore, the median useful life (B50) value also represents the B10 value.
Constant light output	No
Number of products on MCB (16 A type B)	50
EU RoHS compliant	Yes

Operating and Electrical	
Input Voltage	220-240 V
Input frequency	50 to 60 Hz
Inrush current	3.24 A
Inrush time	0.043 ms
Power factor (min.)	0.9

Ledinaire Wall-mounted WL060V

Controls and Dimming	
Dimmable	No

Mechanical and Housing	
Housing material	Polypropylene
Reflector material	Polycarbonate
Optic material	Polymethyl methacrylate
Optical cover/lens material	Polymethyl methacrylate
Fixation material	-
Optical cover/lens finish	Opal
Overall length	285 mm
Overall width	285 mm
Overall height	88 mm
Overall diameter	285 mm
Colour	White
Dimensions (height x width x depth)	88 x 285 x 285 mm (3.5 x 11.2 x 11.2 in)

Approval and Application	
Ingress protection code	IP44 [Wire-protected, splash-proof]
Mech. impact protection code	IK03 [0.3 J]
Sustainability rating	-

Initial Performance (IEC Compliant)	
Initial luminous flux (system flux)	1100 lm
Luminous flux tolerance	+/-10%
Initial LED luminaire efficacy	90 lm/W
Init. Corr. Colour Temperature	3000 K
Init. Colour rendering index	>80
Initial chromaticity	(0.43, 0.40) SDCM ≤5
Initial input power	12 W
Power consumption tolerance	+/-10%

Over Time Performance (IEC Compliant)	
Control gear failure rate at median useful life 50,000 h	2.24 %
Lumen maintenance at median useful life* 50,000 h	L70

Application Conditions	
Ambient temperature range	-20 to +40 °C
Performance ambient temperature Tq	25 °C
Maximum dimming level	Not applicable
Suitable for random switching	Not applicable

Product Data	
Full product code	871016333909299
Order product name	WL060V LED11S/830 PSU II WH
EAN/UPC – product	8710163339092
Order code	33909299
SAP numerator – quantity per pack	1
Numerator – packs per outer box	5
SAP material	911401802080
SAP net weight (piece)	0.410 kg

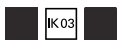

Dimensional drawing

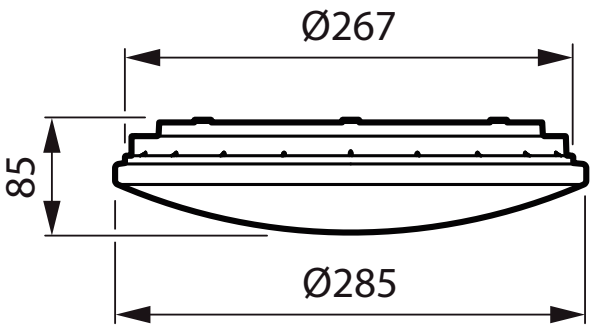

WL060V LED11S/830 PSU II WH

Ledinaire Wall-mounted WL060V

© 2022 Signify Holding All rights reserved. Signify does not give any representation or warranty as to the accuracy or completeness of the information included herein and shall not be liable for any action in reliance thereon. The information presented in this document is not intended as any commercial offer and does not form part of any quotation or contract, unless otherwise agreed by Signify. Philips and the Philips Shield Emblem are registered trademarks of Koninklijke Philips N.V.