SAMSUNG

User Manual

F27T85*

The colour and the appearance may differ depending on the product, and the specifications are subject to change without prior notice to improve the performance.

The contents of this manual are subject to change without notice to improve quality.

© Samsung Electronics

Samsung Electronics owns the copyright for this manual.

Use or reproduction of this manual in parts or entirety without the authorization of Samsung Electronics is prohibited.

Trademarks other than that of Samsung Electronics are owned by their respective owners.

An administration fee may be charged in the following situations:

(a) An engineer is called out at your request, but it is found that the product has no defect (i.e., where the user manual has not been read).

(b) You bring the unit to a repair centre, but it is found that the product has no defect (i.e., where the user manual has not been read).

You will be informed of the administration fee amount before a technician visits.

Table of contents

Before Using the Product

Safety Precautions	**5**
Electricity and Safety	5
Installation	6
Operation	7
Cleaning	**8**
Correct posture to use the product	**9**

Preparations

Installation	**10**
Attaching the Stand	10
Removing the Stand	11
Precautions for moving the product	11
Checking the space around the product	12
Adjusting the Product Tilt and Height	12
Rotating the Product	13
Anti-theft Lock	13
Installing a Wall-mount Kit or Desktop Stand	14
Control Panel	**15**
Direct Key Guide	**16**

Connecting and Using a Source Device

Read below before connecting the product.	**17**
Ports	**17**
Connecting and Using a PC	**18**
Connection Using the HDMI Cable	18
Connection Using an HDMI-DVI Cable	18
Connection Using an DP Cable	18
Connecting to headphones or earphones	18
Connecting the Power	18
Connecting the Product to a PC as a USB HUB	19
Tidying Up the Connected Cables	**20**
Setting Optimum Resolution	**21**

Screen Setup

Picture Mode	**22**
Brightness	**23**
Contrast	**23**
Sharpness	**23**
Color	**23**
Black Level	**24**
Eye Saver Mode	**24**
Response Time	**24**
Game Mode	**24**
Screen Ratio	**25**
Screen Adjustment	**25**

Table of contents

Configuring the PIP/PBP Settings

PIP/PBP Mode 26
Mode Type 26
Screen Size 26
Screen Position 26
Sound Source 26
Source 27
Screen Ratio 27
Contrast 27

Adjusting OSD (On Screen Display) settings

Transparency 28
Position 28
H-Position 28
V-Position 28
Language 28
Display Time 28

Setup and Reset

DisplayPort Ver. 29
FreeSync 29
Volume 30
Eco Saving Plus 30
Off Timer Plus 31
PC/AV Mode 31
Auto Source Switch 31
Key Repeat Time 31
Power LED On 31

Support

Self Diagnosis 32
Software Update 32
Information 33
Reset All 33

Installing the Software

Easy Setting Box 34
Restrictions and Problems with the Installation 34
System Requirements 34
Driver Installation 34

Troubleshooting Guide

Requirements Before Contacting Samsung Customer Service Centre 35
Product diagnosis (Screen issue) 35
Checking the Resolution and Frequency 35
Check the following. 35
Q & A 37

Table of contents

Specifications

General	38
Standard Signal Mode Table	39

Appendix

Responsibility for the Pay Service (Cost to Customers)	41
Not a product defect	41
A Product damage caused by customer's fault	41
Others	41
Extended warranty	42

Chapter 01
Before Using the Product

Safety Precautions

Warning A serious or fatal injury may result if instructions are not followed.

Caution Personal injury or damage to properties may result if instructions are not followed.

CAUTION			
RISK OF ELECTRIC SHOCK. DO NOT OPEN.			
CAUTION: TO REDUCE THE RISK OF ELECTRIC SHOCK, DO NOT REMOVE COVER (OR BACK). THERE ARE NO USER SERVICEABLE PARTS INSIDE. REFER ALL SERVICING TO QUALIFIED PERSONNEL.			
	This symbol indicates that high voltage is present inside. It is dangerous to make any kind of contact with any internal part of this product.		AC voltage: Rated voltage marked with this symbol is AC voltage.
	This symbol indicates that this product has included important literature concerning operation and maintenance.		DC voltage: Rated voltage marked with this symbol is DC voltage.
	Class II product: This symbol indicates that a safety connection to electrical earth (ground) is not required. If this symbol is not present on a product with a mains lead, the product MUST have a reliable connection to protective earth (ground).		Caution. Consult instructions for use: This symbol instructs the user to consult the user manual for further safety related information.

Electricity and Safety

Warning

- Do not use a damaged power cord or plug, or a loose power socket.
- Do not use multiple products with a single power socket.
- Do not touch the power plug with wet hands.
- Insert the power plug all the way in so it is not loose.
- Connect the power plug to a grounded power socket (type 1 insulated devices only).
- Do not bend or pull the power cord with force. Be careful not to leave the power cord under a heavy object.
- Do not place the power cord or product near heat sources.
- Clean any dust around the pins of the power plug or the power socket with a dry cloth.

Caution

- Do not disconnect the power cord while the product is being used.
- Only use the power cord provided with your product by Samsung. Do not use the power cord with other products.
- Keep the power socket where the power cord is connected unobstructed.
  - The power cord must be disconnected to cut off power to the product when an issue occurs.
- Hold the plug when disconnecting the power cord from the power socket.

Installation

Warning

- DO NOT PLACE CANDLES, INSECT REPELLANTS OR CIGARETTES ON TOP OF THE PRODUCT. DO NOT INSTALL THE PRODUCT NEAR HEAT SOURCES.
- Keep the plastic packaging out of the reach of children.
  - Children may suffocate.
- Do not install the product on an unstable or vibrating surface (insecure shelf, sloped surface, etc.)
  - The product may fall and become damaged and/or cause an injury.
  - Using the product in an area with excess vibration may damage the product or cause a fire.
- Do not install the product in a vehicle or a place exposed to dust, moisture (water drips, etc.), oil, or smoke.
- Do not expose the product to direct sunlight, heat, or a hot object such as a stove.
  - The product lifespan may be reduced or a fire may result.
- Do not install the product within the reach of young children.
  - The product may fall and injure children.
- Edible oil (such as soybean oil) may damage or distort the product. Keep the product away from oil pollution. And do not install or use the product in the kitchen or near the kitchen stove.

Caution

- Do not drop the product while moving.
- Do not set down the product on its front.
- When installing the product on a cabinet or shelf, make sure that the bottom edge of the front of the product is not protruding.
  - The product may fall and become damaged and/or cause an injury.
  - Install the product only on cabinets or shelves of the right size.
- Set down the product gently.
  - Product failure or personal injury may result.
- Installing the product in an unusual place (a place exposed to a lot of fine dust, chemical substances, extreme temperatures or a significant presence of moisture, or a place where the product will operate continuously for an extended period of time) may seriously affect its performance.
  - Be sure to consult Samsung Customer Service Centre if you want to install the product at such a place.
- Before assembling the product, place the product down on a flat and stable surface so that the screen is facing downwards.

Operation

Warning

- There is a high voltage inside the product. Never disassemble, repair or modify the product yourself.
  - Contact Samsung Customer Service Centre for repairs.
- To move the product, first disconnect all the cables from it, including the power cable.
- If the product generates abnormal sounds, a burning smell or smoke, disconnect the power cord immediately and contact Samsung Customer Service Centre.
- Do not let children hang from the product or climb on top of it.
  - Children may become injured or seriously harmed.
- If the product is dropped or the outer case is damaged, turn off the power and disconnect the power cord. Then contact Samsung Customer Service Centre.
  - Continued use can result in a fire or electric shock.
- Do not leave heavy objects or items that children like (toys, sweets, etc.) on top of the product.
  - The product or heavy objects may fall as children try to reach for the toys or sweets resulting in a serious injury.
- During a lightning or thunderstorm, power off the product and remove the power cable.
- Do not drop objects on the product or apply impact.
- Do not move the product by pulling the power cord or any cable.
- If a gas leakage is found, do not touch the product or power plug. Also, ventilate the area immediately.
- Do not lift or move the product by pulling the power cord or any cable.
- Do not use or keep combustible spray or an inflammable substance near the product.
- Ensure the vents are not blocked by tablecloths or curtains.
  - An increased internal temperature may cause a fire.
- Do not insert metallic objects (chopsticks, coins, hairpins, etc) or objects that burn easily (paper, matches, etc) into the product (via the vent or input/output ports, etc).
  - Be sure to power off the product and disconnect the power cord when water or other foreign substances have entered the product. Then contact Samsung Customer Service Centre.
- Do not place objects containing liquid (vases, pots, bottles, etc) or metallic objects on top of the product.
  - Be sure to power off the product and disconnect the power cord when water or other foreign substances have entered the product. Then contact Samsung Customer Service Centre.

Caution

- Leaving the screen fixed on a stationary image for an extended period of time may cause afterimage burn-in or defective pixels.
  - Set the screen to power-saving mode or moving-picture screen saver when not using the product for an extended period of time.
- Disconnect the power cord from the power socket if you do not plan on using the product for an extended period of time (vacation, etc).
  - Dust accumulation combined with heat can cause a fire, electric shock or electric leakage.
- Use the product at the recommended resolution and frequency.
  - Your eyesight may deteriorate.
- Do not hold the product upside-down or move it by holding the stand.
  - The product may fall and become damaged or cause an injury.
- Looking at the screen too close for an extended period of time can deteriorate your eyesight.
- Do not use humidifiers or stoves around the product.
- Rest your eyes for more than 5 minutes or look at distance objects for every 1 hour of product use.
- Do not touch the screen when the product has been turned on for an extended period of time as it will become hot.
- Store small accessories out of the reach of children.
- Exercise caution when adjusting the product angle or stand height.
  - Your hand or finger may get stuck and injured.
  - Tilting the product at an excessive angle may cause the product to fall and an injury may result.
- Do not place heavy objects on the product.
  - Product failure or personal injury may result.
- When using headphones or earphones, do not turn the volume too high.
  - Having the sound too loud may damage your hearing.

Cleaning

High-glossy models can develop white stains on the surface if an ultrasonic wave humidifier is used nearby.

— Contact your nearest Samsung Customer Service Centre if you want to clean the inside of the product (Service fee will be charged.)

Do not press the product screen with hands or other objects. There is a risk of damaging the screen.

— Exercise care when cleaning as the panel and exterior of advanced LCDs are easily scratched.

Take the following steps when cleaning.

1. Power off the product and PC.
2. Disconnect the power cord from the product.

   — Hold the power cable by the plug and do not touch the cable with wet hands. Otherwise, an electric shock may result.
3. Wipe the product with a clean, soft and dry cloth.

   Wet a soft cloth in water, wing it out well, and then use the cloth to wipe the exterior of the product clean.
   - Do not apply a cleaning agent that contains alcohol, solvent, or surfactant to the product.
   - Do not spray water or detergent directly on the product.
4. Connect the power cord to the product when cleaning is finished.
5. Power on the product and PC.

Correct posture to use the product



Use the product in the correct posture as follows:

- Straighten your back.
- Allow a distance of 45 to 50cm between your eye and the screen, and look slightly downward at the screen.
- Keep your eyes directly in front of the screen.
- Adjust the angle so light does not reflect on the screen.
- Keep your forearms perpendicular to your upper arms and level with the back of your hands.
- Keep your elbows at about a right angle.
- Adjust the height of the product so you can keep your knees bent at 90 degrees or more, your heels attached to the floor, and your arms lower than your heart.
- Do the Eye excercises or blink frequently, then eye fatigue will be relieved.

Chapter 02
Preparations

Installation

Attaching the Stand

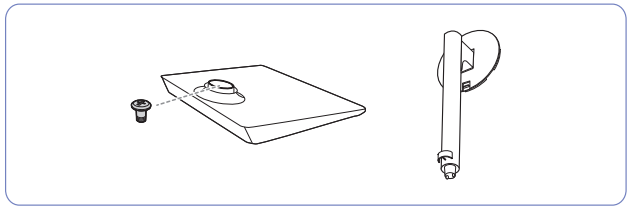

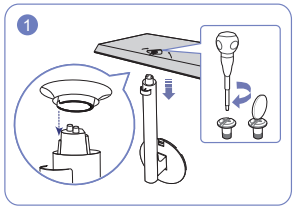

Insert the stand neck into the stand base in the direction shown in the figure. Tightly fasten the connecting screw at the bottom of the stand base.

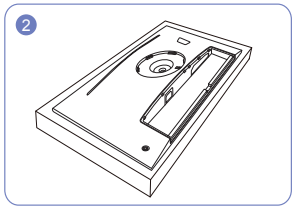

Place the protective Styrofoam (cushion) included in the package on the floor and place the product facing down on the Styrofoam, as shown in the image. If Styrofoam is unavailable, use a thick sitting mat.

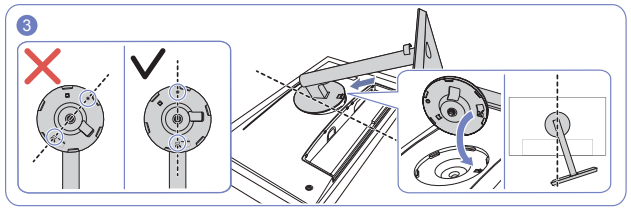

Place the stand neck on the display, as shown in the figure. When you place the stand neck, ensure that the raised button on the display can be inserted into the groove of the stand neck.

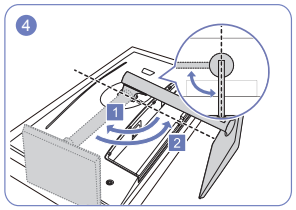

Turn the stand neck of the display clockwise for 90° to ensure that the stand neck of the display is put into place. (Even if you hear a click sound, turn it 90° clockwise for checking.)

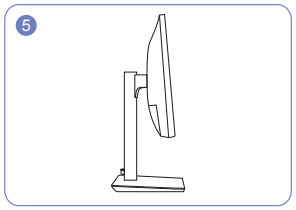

Stand assembly is complete.

Removing the Stand

Before removing the stand from the product, place the product on a flat and stable surface with the screen facing down.

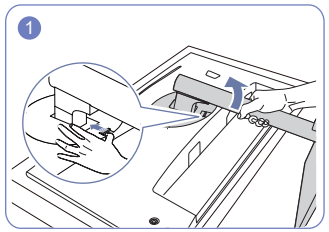

Place the product on a clean and flat floor as shown in the figure. Push the key upward and hold. Turn the stand neck of the display counterclockwise for 10°.

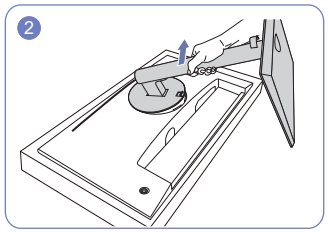

Lift the stand neck in the arrow direction to detach it from the display.

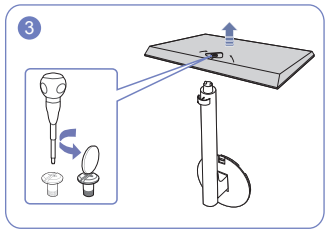

Unfasten the connecting screw at the bottom of the stand base, and then remove the stand neck from the stand base by pulling it in the arrow direction, as shown in the figure.

Precautions for moving the product

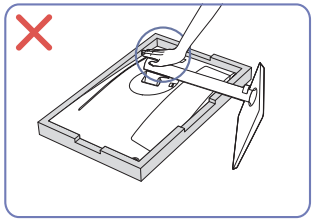

- Do not press down on the product. There is a risk of damaging the product.

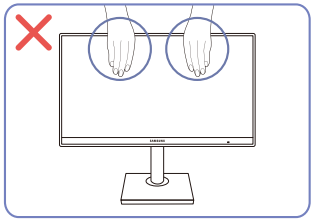

- Do not directly apply pressure on the screen.
- Do not hold the screen when moving the product.

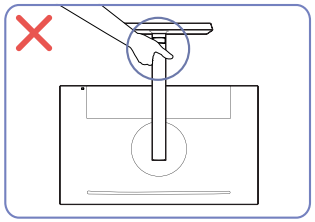

- Do not hold the product upside down only by the stand.

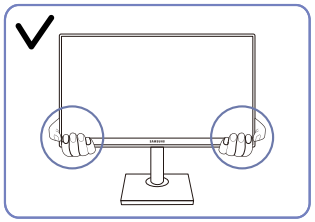

- Hold the lower corners or edges of the product when moving it.

Checking the space around the product

Make sure to have enough space for ventilation when placing the product. An internal temperature rise may cause fire and damage the product. Maintain enough space around the product as shown in the diagram when installing the product.

— The exterior may differ depending on the product.

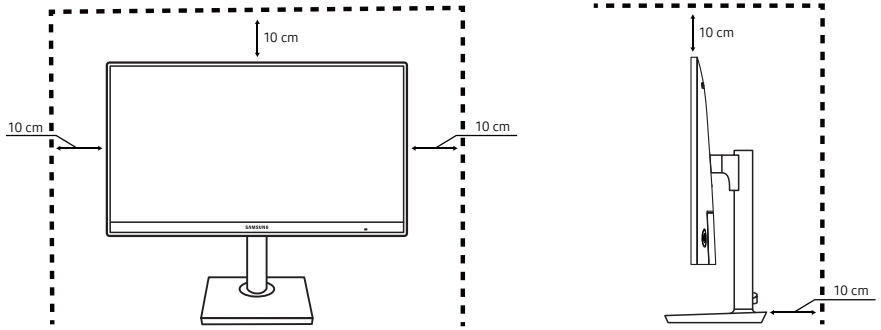

Adjusting the Product Tilt and Height

— The colour and shape of parts may differ from what is shown. Specifications are subject to change without notice to improve quality.

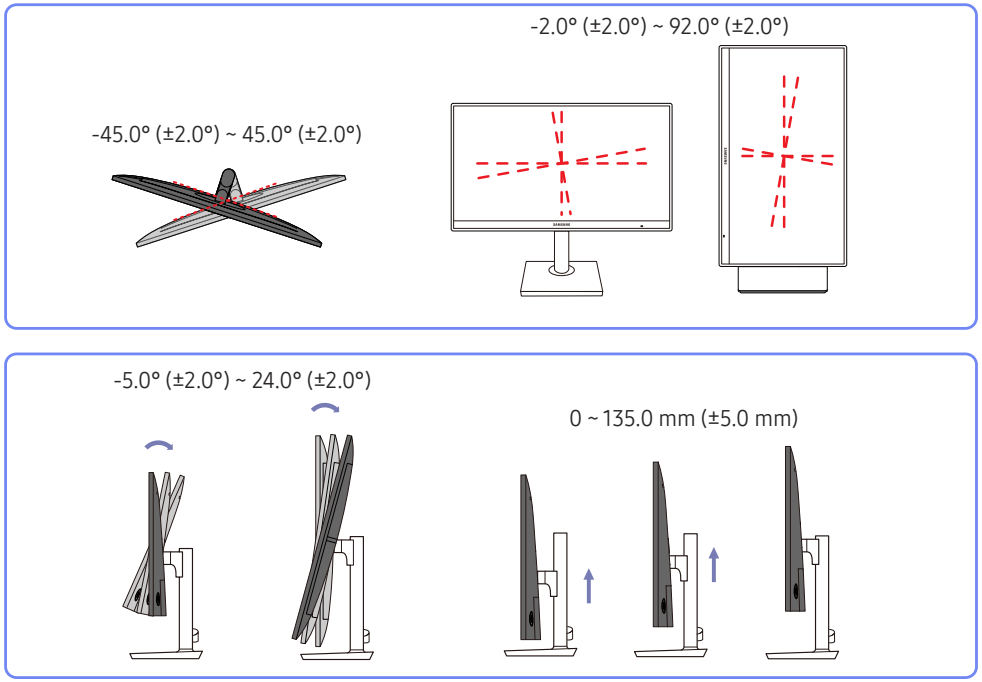

- The product tilt and height can be adjusted.
- Hold the top centre of the product and adjust the height carefully.
- The rotation and height adjustment has a certain tolerance. Stay within the tolerances when rotating or adjusting the height of the product.

Rotating the Product

— The colour and shape of parts may differ from what is shown. Specifications are subject to change without notice to improve quality.

You can rotate your product as shown below.

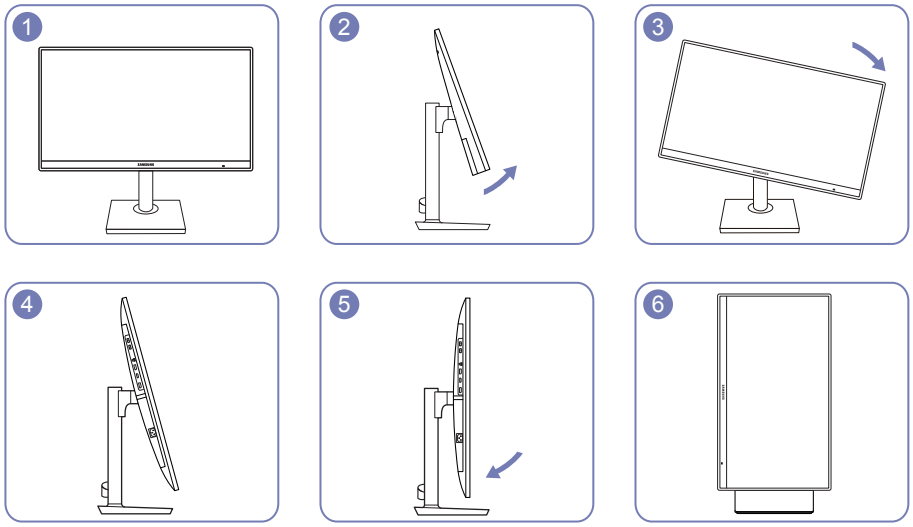

- Be sure to fully extend the stand before rotating the product.
- If you rotate the product without fully extending the stand, the corner of the product may hit the floor and get damaged.
- Do not rotate the product counterclockwise. The product may get damaged.
- When rotating the product, be careful not to damage the product by hitting the object or stand.

Anti-theft Lock

— An anti-theft lock allows you to use the product securely even in public places.

— The locking device shape and locking method depend on the manufacturer. Refer to the user guide provided with your anti-theft locking device for details.

To lock an anti-theft locking device:

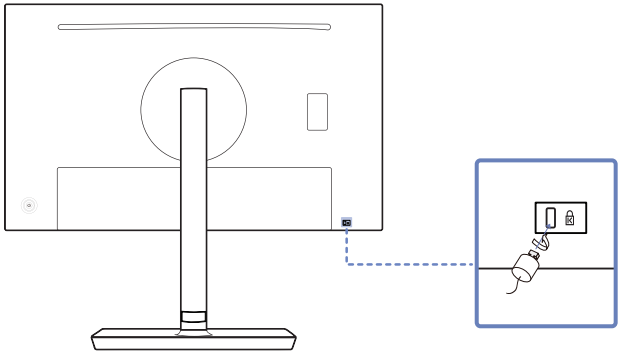

1 Fix the cable of your anti-theft locking device to a heavy object such as a desk.

2 Put one end of the cable through the loop on the other end.

3 Insert the locking device into the anti-theft lock slot at the back of the product.

4 Lock the locking device.

- An anti-theft locking device can be purchased separately.
- Refer to the user guide provided with your anti-theft locking device for details.
- Anti-theft locking devices can be purchased at electronics retailers or online.

Installing a Wall-mount Kit or Desktop Stand

— Power the product off and remove the power cable from the power socket.

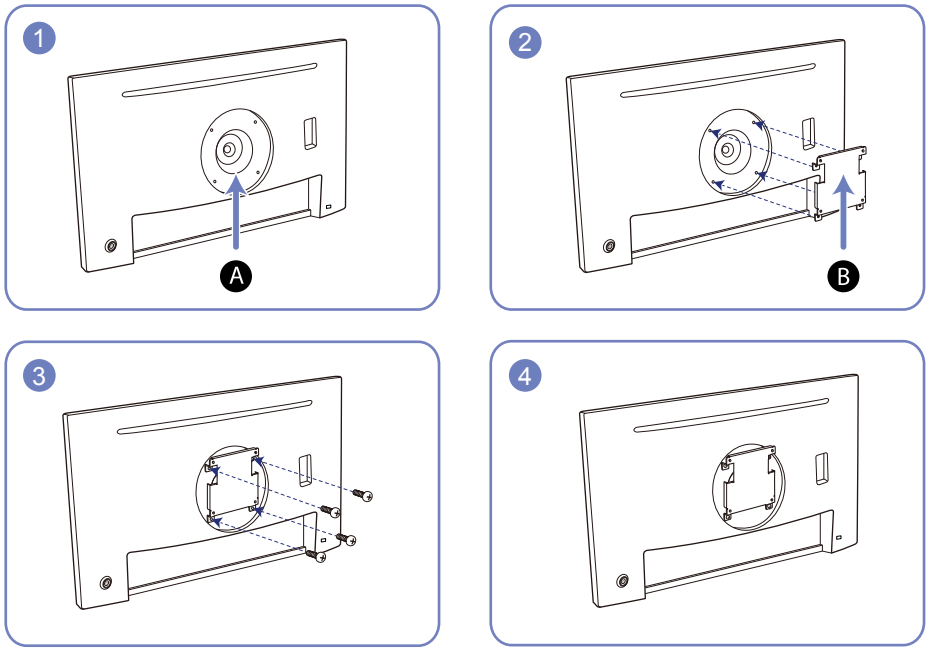

A Attach the wall-mount kit or desktop stand here

B Wall-mount bracket (optional)

Align the grooves and tightly fasten the screws on the bracket on the product with the corresponding parts on the wall-mount kit or desktop stand you want to attach.

- Notes
  - Using a screw longer than the standard length can damage the internal components of the product.
  - The length of screws required for a wall mount that does not comply with the VESA standards may vary depending on the specifications.
  - Do not use screws that do not comply with the VESA standards. Do not attach the wall-mount kit or desktop stand using excessive force. The product may get damaged or fall and cause personal injury. Samsung shall not be held liable for any damage or injury caused by using improper screws or attaching the wall-mount kit or desktop stand using excessive force.
  - Samsung shall not be held liable for any product damage or personal injury caused by using a wall-mount kit other than the one specified or from an attempt to install the wall-mount kit on your own.
  - To mount the product on a wall, ensure you purchase a wall-mount kit that can be installed 10 cm or farther away from the wall.
  - Be sure to use a wall-mount kit that complies with the national standards.
  - To install the monitor using a wall mount, disconnect the stand base from the monitor.

Model name	VESA screw hole specs (A * B) in millimeters	Standard Screw	Quantity
F27T85*	100.0 x 100.0	4.0 mm Φ, 0.7 pitch * 10.0 mm long	4 EA

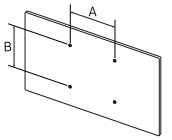

— Do not install your Wall Mount Kit while your product is turned on. It may result in personal injury due to electric shock.

Control Panel

— The colour and shape of parts may differ from what is shown. Specifications are subject to change without notice to improve quality.

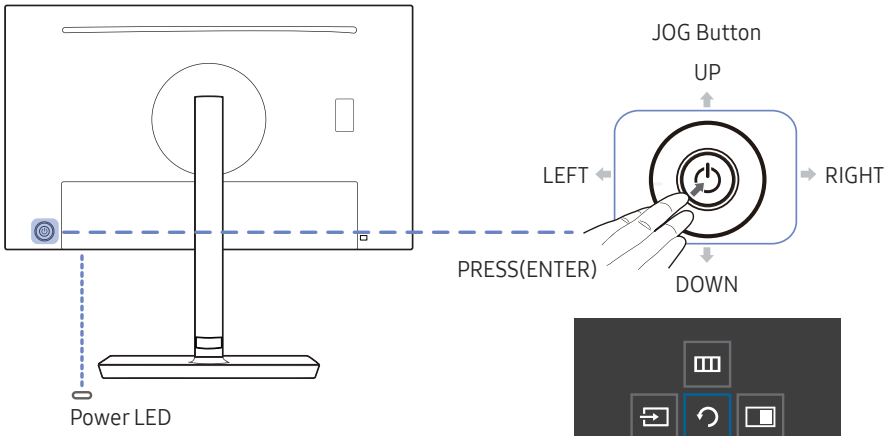

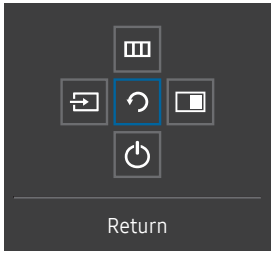

Function Key Guide

Parts		Description
JOG Button		Multi directional button that helps navigate.
Power LED		This LED is power status indicator. — You can select the power LED operation to be enabled or disabled on the menu screen. (→ System → Power LED On)
Function Key Guide		To use the Function Key Guide, press the JOG button when the screen is turned on. — When the product not displays the OSD menu, the JOG Button could be used as below. — Up : Change the settings for Brightness, Contrast, and Eye Saver Mode. — Down : Change the Volume setting. — Left or Right : Change the Source setting. — PRESS(ENTER): The selected item will be applied.
Source		Changes the input source. A message will appear on the top left corner of the screen if the input source has been changed.
Menu		Displays the main on-screen menu. To enable or disable the menu lock, move to the next step (move the jog button to the right) with the “Menu” displayed, and then push the jog button to the left for 10 seconds until the menu screen disappears. If the menu lock is enabled, Brightness, Contrast, Eye Saver Mode, Volume, Self Diagnosis and Information are available.
PIP/PBP		Enables the PIP/PBP mode.
Power Off		Turns off the product.
Return		Exits from the menu page.

Direct Key Guide

— On the Direct Key Guide screen, the following menu options appear when the product screen is switched on or the input source is changed.

— The Direct Key Guide screen shows if Eye Saver Mode is enabled. (: On, : Off)

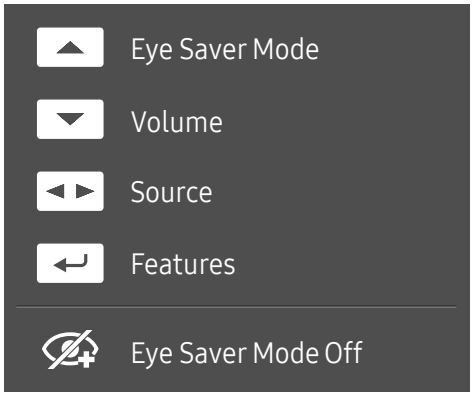

- UP: Adjust Brightness, Contrast, Eye Saver Mode.
- DOWN: Adjust Volume, Mute.
- LEFT/RIGHT: Adjust Source.
- PRESS(ENTER): Display Function Key Guide.

Chapter 03
Connecting and Using a Source Device

Read below before connecting the product.

1 Before connecting the product, check the shapes of both ports of the supplied signal cables and the shapes and locations of the ports on the product and external device.

2 Before connecting the product, make sure you remove the power cables from both the product and the external device to prevent damage to the product due to a short circuit or over current.

3 After all signal cables have been properly connected, connect the power cables back to the product and the external device.

4 After connecting is completed, make sure you read the user guide to acquaint yourself with the product functions, precautions and other information required to use the product properly.

— Connecting parts may differ in different products.

— Provided ports may vary depending on the product.

Ports

— The functions available may vary depending on the product model. The colour and shape of parts may differ from what is shown. Specifications are subject to change without notice to improve quality. Refer to the actual product.

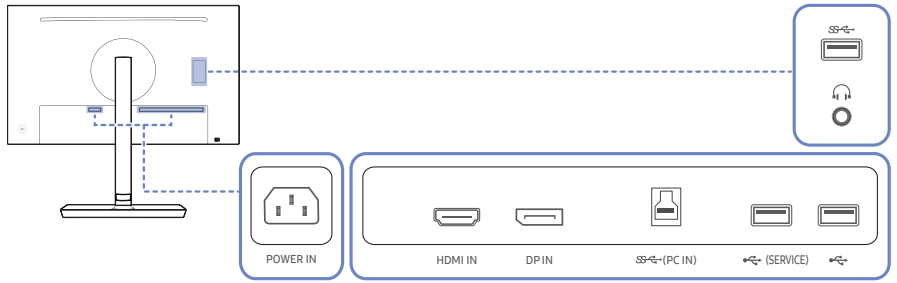

Port	Description
POWER IN	Connect the power cord for your monitor to the **POWER IN** port on the back of the product.
HDMI IN	Connects to a source device using an HDMI cable or HDMI-DVI cable.
DP IN	Connects to a PC using a DP cable.
SS (PC IN)	Connects to a PC using a USB cable. Compatible with a USB cable version 3.0 or lower. — This port can only connect to a PC.
(SERVICE) SS	Connect to a USB device.
	Connect to an audio output device such as headphones or earphones.

Connecting and Using a PC

Select a connection method suitable for your PC.

Connection Using the HDMI Cable



— When connecting an HDMI cable, use the cable that came with the components of the product. If you use an HDMI cable other than provided by Samsung, the image quality may be degraded.

Connection Using an HDMI-DVI Cable



— The audio function is not supported if the source device is connected using the HDMI-DVI cable.

— The optimum resolution may not be available with an HDMI-DVI cable.

Connection Using an DP Cable



— A DP cable shorter under 1.5 m in length is recommended. Using a cable longer than 1.5 m can affect the picture quality.

Connecting to headphones or earphones



— The headphones or earphones jack supports only the 3 conductor tip-ring-sleeve (TRS) type.

Connecting the Power

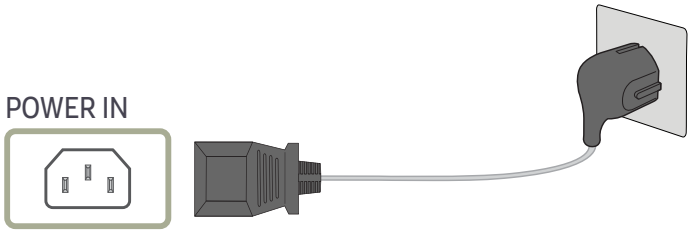

To use the product, connect the power cable to a power outlet and the **POWER IN** port on the product.

— The input voltage is switched automatically.

Connecting the Product to a PC as a USB HUB

Using the product as a hub, connect and use various source devices with the product at a time.

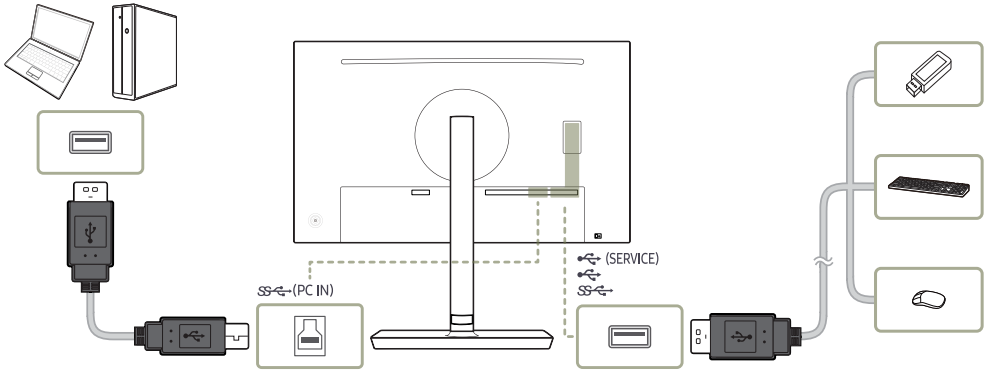

- To detect and start a USB device faster, connect the device to the USB port SS on the product. The read/write rate will be affected by the USB device and your PC.
- For USB-related problems caused by OS, drive programs or software, please contact relevant suppliers.
- With the launch of various USB devices on the market, we cannot guarantee that our products are matched with all USB devices.
- For an external mass-storage HDD requiring external power supply, be sure to connect it to a power source.
- The company is not liable for problems or damages to an external device caused by using an unauthorized cable for the connection.
- Some products do not follow the USB standard, and it may cause a malfunction of the device.

Tidying Up the Connected Cables

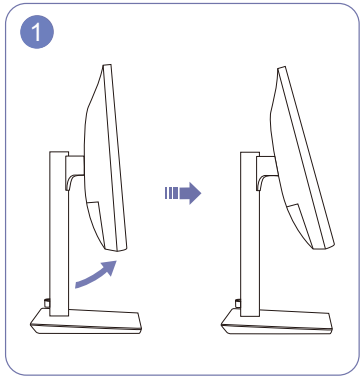

Tilt the display, as shown in the figure.

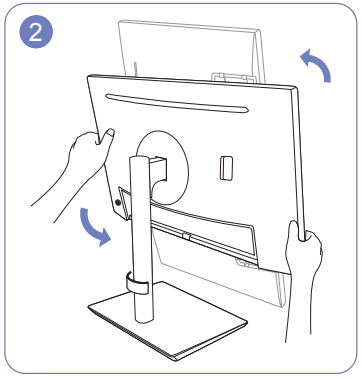

Rotate the product to the highest vertical position.

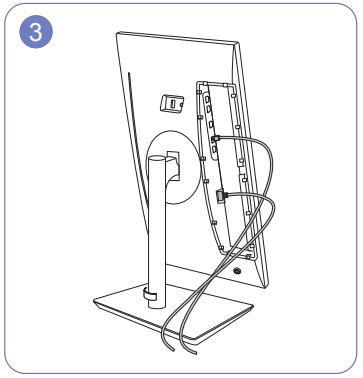

Connect the corresponding cables.

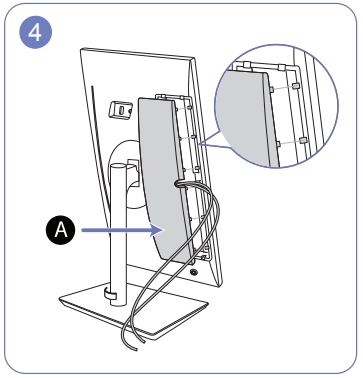

Arrange the cables through the groove on the back of the product, and then attach the COVER-REAR SUB (A). When you attach the COVER-REAR SUB (A), please aim six ribs of the COVER-REAR SUB (A) to the back of the product at first.

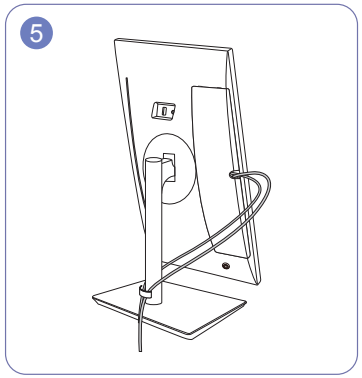

Arrange each of the two cables through either side of the HOLDER-STAND CABLE, as shown in the figure.

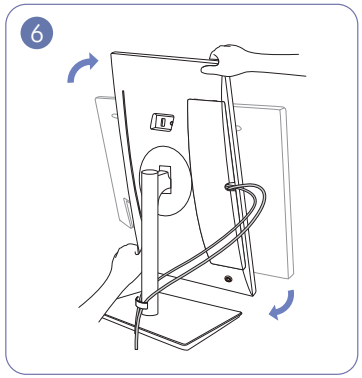

Rotate the product to the horizontal position.

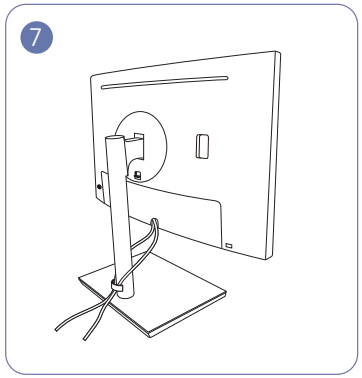

Assembly is complete.

Setting Optimum Resolution

An information message about setting optimum resolution will appear if you power on the product for the first time after purchase.

Select a language on information message and change the resolution on your PC to the optimum setting.

— If the optimum resolution is not selected, the message will appear up to three times for a specified time even when the product is turned off and on again.

— If you want to set the optimum resolution for your computer. Please refer to (Q&A) → "How can I change the resolution?"

Chapter 04
Screen Setup

Function Key Guide → ☰ → Picture

— The functions available may vary depending on the product model. The colour and shape of parts may differ from what is shown. Specifications are subject to change without notice to improve quality.

Picture Mode

This menu provides an optimum picture quality suitable for the environment where the product will be used.

— This menu is not available when Eco Saving Plus is enabled.

— This menu is not available when Game Mode is enabled.

— This menu is not available when Eye Saver Mode is enabled.

— This menu is not available when PIP/PBP Mode is enabled.

In PC mode

- Custom: Customise the contrast and brightness as required.
- Standard: Obtain a picture quality suitable for editing documents or using Internet.
- Cinema: Obtain the brightness and sharpness of monitors suitable for enjoying video and DVD content.
- Dynamic Contrast: Obtain balanced brightness through automatic contrast adjustment.

In AV mode

When the external input is connected through HDMI/DP and PC/AV Mode is set to AV, Picture Mode has four automatic picture settings (Dynamic, Standard, Movie and Custom) that are preset at the factory. You can activate either Dynamic, Standard, Movie or Custom. You can select Custom which automatically recalls your personalised picture settings.

- Dynamic: Select this mode to view a sharper image than in Standard mode.
- Standard: Select this mode when the surroundings are bright.
- Movie: Select this mode when the surroundings are dark. This will save power and reduce eye fatigue.
- Custom: Select this mode when you want to adjust the image according to your preferences.

— The input source is 480p, 576p, 720p, or1080p and product can display normally (Not every model can support all of these signals.).

Brightness

You can adjust the general brightness of the picture. (Range: 0~100)

A higher value will make the picture appear brighter.

— This menu is not available when Picture Mode is set to Dynamic Contrast mode.

— This menu is not available when Eco Saving Plus is enabled.

— This menu is not available when Eye Saver Mode is enabled.

Contrast

Adjust the contrast between the objects and background. (Range: 0~100)

A higher value will increase the contrast to make the object appear clearer.

— This option is not available when Picture Mode is in Cinema or Dynamic Contrast mode.

— This menu is not available when Game Mode is enabled.

— This menu is not available when PIP/PBP Mode is enabled.

Sharpness

Make the outline of objects more clear or blurry. (Range: 0~100)

A higher value will make the outline of objects clearer.

— This option is not available when Picture Mode is in Cinema or Dynamic Contrast mode.

— This menu is not available when Game Mode is enabled.

— This menu is not available when PIP/PBP Mode is enabled.

Color

Adjust the tint of the screen.

— This menu is not available when Picture Mode is set to Cinema or Dynamic Contrast mode.

— This menu is not available when Game Mode is enabled.

— This menu is not available when Eye Saver Mode is enabled.

— This menu is not available when PIP/PBP Mode is enabled.

- Red: Adjust the red saturation level. Values closer to 100 mean greater intensity for the colour.
- Green: Adjust the green saturation level. Values closer to 100 mean greater intensity for the colour.
- Blue: Adjust the blue saturation level. Values closer to 100 mean greater intensity for the colour.
- Color Tone: Select a colour tone that best suits your viewing needs.
  - Cool 2: Set the colour temperature to be cooler than Cool 1.
  - Cool 1: Set the colour temperature to be cooler than Normal mode.
  - Normal: Display the standard colour tone.
  - Warm 1: Set the colour temperature to be warmer than Normal mode.
  - Warm 2: Set the colour temperature to be warmer than Warm 1.
  - Custom: Customise the colour tone.

  — When the external input is connected through HDMI/DP and PC/AV Mode is set to AV, Color Tone has four colour temperature settings (Cool, Normal, Warm and Custom).
- Gamma: Adjust the middle level of luminance.
  - Mode1 / Mode2 / Mode3

Black Level

If a DVD player or set-top box is connected to the product via HDMI, image quality degradation (contrast/colour degradation, black level, etc.) may occur, depending on the connected source device.

In such case, Black Level can be used to adjust the image quality.

— This function is only available in HDMI mode.

— This menu is not available when PIP/PBP Mode is enabled.

- Normal: Select this mode when there is no contrast ratio degradation.
- Low: Select this mode to reduce the black level and increase the white level when there is a contrast ratio degradation.

— Black Level may not be compatible with some source devices.

— The Black Level feature is only activated at a certain AV resolution, such as 720P @ 60 Hz and 1080P @ 60 Hz.

Eye Saver Mode

Set to an optimum picture quality suitable for eye relaxation.

TÜV Rheinland “Low Blue Light Content” is a certification for products which meet requirements for lower blue light levels. When Eye Saver Mode is 'On', the blue light that wavelength is around 400nm will decrease, and it will provide an optimum picture quality suitable for eye relaxation. At the same time, the blue light level is lower than in the default settings, and it was tested by TÜV Rheinland and certified as it met the requirements of TÜV Rheinland “Low Blue Light Content” standards.

Response Time

Accelerate the panel response rate to make video appear more vivid and natural.

— Use Standard mode when not playing a video or game.

— This menu is not available when PIP/PBP Mode is enabled.

Game Mode

Configure the product screen settings for game mode.

Use this feature when playing games on a PC or when a game console such as PlayStation™ or Xbox™ is connected.

— This menu is not available when Eye Saver Mode is enabled.

— This menu is not available when Eco Saving Plus is enabled.

— When the product turns off, enters power-saving mode or changes input sources, Game Mode turns Off even if it is set to On.

— If you want to keep Game Mode enabled all the time, select Always On.

— This menu is not available when PIP/PBP Mode is enabled.

Screen Ratio

Change the picture size.

In PC mode

- Auto: Display the picture according to the aspect ratio of the input source.
- Wide: Display the picture in full screen regardless of the aspect ratio of the input source.

In AV mode

- 4:3: Display the picture with an aspect ratio of 4:3. Suitable for videos and standard broadcasts.
- 16:9: Display the picture with an aspect ratio of 16:9.
- Screen Fit: Display the picture with the original aspect ratio without cutting off.

— The function may not be supported depending on the ports provided with the product.

— Changing the Screen Ratio is available when the following conditions are satisfied.

  — The input source is 480p, 576p, 720p, or 1080p and product can display normally (Not every model can support all of these signals.).

  — This can only be set when the external input is connected through HDMI/DP and PC/AV Mode is set to AV.

  — This option is available when FreeSync is disabled.

Screen Adjustment

— Connection Using the HDMI/DP Cable

  — This option is only available when PC/AV Mode is set to AV.

  — This menu is only available when Screen Ratio is set to Screen Fit in AV Mode.

  When a 480P or 576P or 720P or 1080P signal is input in AV mode and the product can display normally, select Screen Fit to adjust horizontal position and vertical position in 0-6 levels.

— Coarse, Fine: This function is only available in Analog mode.

Configuring H-Position & V-Position

H-Position: Move the screen to the left or right.

V-Position: Move the screen up or down.

Chapter 05
Configuring the PIP/PBP Settings

Function Key Guide → → PIP/PBP

― The functions available may vary depending on the product model. The colour and shape of parts may differ from what is shown. Specifications are subject to change without notice to improve quality.

PIP/PBP Mode

Turn PIP/PBP Mode on or off.

Mode Type

Select the size and aspect ratio of the sub-screen.

- 8:9 | 8:9 / PIP

― This option is available when PIP/PBP Mode is set to On.

Screen Size

Select sub-screen size.

- /

― This option is available when PIP/PBP Mode is set to On.

― This option is available when Mode Type is set to PIP.

Screen Position

Select the position of the sub-screen from the available options.

- / / /

― This option is available when PIP/PBP Mode is set to On.

― This option is available when Mode Type is set to PIP.

Sound Source

Set which screen you want to hear the sound for.

PIP mode

/

PBP mode

/

Source

Select the source for each screen.

— This option is available when PIP/PBP Mode is set to On.

Screen Ratio

Choose the size and aspect ratio of the picture displayed on screen.

In PC mode

- Auto: Display the picture according to the aspect ratio of the input source.
- Wide: Display the picture in full screen regardless of the aspect ratio of the input source.

In AV mode

- 4:3: Display the picture with an aspect ratio of 4:3. Suitable for videos and standard broadcasts.
- 16:9: Display the picture with an aspect ratio of 16:9.
- Screen Fit: Display the picture with the original aspect ratio without cutting off.

— The function may not be supported depending on the ports provided with the product.

— Changing the Screen Ratio is available when the following conditions are satisfied.

  — The input source is 480p, 576p, 720p, or 1080p and product can display normally (Not every model can support all of these signals.).

  — This can only be set when the external input is connected through HDMI/DP and PC/AV Mode is set to AV.

  — This option is available when FreeSync is disabled.

— This option is available when PIP/PBP Mode is set to On.

Contrast

Adjust the contrast level. Values closer to 100 mean a bigger light/dark contrast.

— This option is available when PIP/PBP Mode is set to On.

Chapter 06
Adjusting OSD (On Screen Display) settings

Function Key Guide → ☰ → OnScreen Display

— The functions available may vary depending on the product model. The colour and shape of parts may differ from what is shown. Specifications are subject to change without notice to improve quality.

Transparency

Set the transparency for the menu windows.

Position

H-Position

Move the menu position to the left or right.

V-Position

Move the menu position up or down.

Language

Set the menu language.

— A change to the language setting will only be applied to the onscreen menu display.

— It will not be applied to other functions on your PC.

Display Time

The OSD menu will automatically disappear if the menu is not used for a specified period of time.

Display Time is a function to specify the time which you want the OSD menu to disappear.

Chapter 07
Setup and Reset

Function Key Guide → ☰ → System

— The functions available may vary depending on the product model. The colour and shape of parts may differ from what is shown. Specifications are subject to change without notice to improve quality.

DisplayPort Ver.

Select the DisplayPort version to use.

— Incorrect settings may cause the screen to go blank. If this occurs, check the device specifications.

— If the product (when set to DisplayPort) is displaying the message Check the cable connection and the settings of the source device. press the JOG button to display the Function Key Guide screen and then select ☰ → System → DisplayPort Ver. → 1.1 or 1.2↑.

FreeSync

FreeSync technology is solution that eliminates screen tearing without all the usual lag and latency.

This feature will eliminate screen tearing and lag during game play. Improve your gaming experience.

The displayed FreeSync menu items on the monitor may vary, depending on the monitor model and compatibility with the AMD graphics card.

- Off: Disable FreeSync.
- On: Turn on the AMD graphics cards' FreeSync function. You may experience intermittent flickers when playing some games.

Apply the optimum resolution when using FreeSync.

The refresh rate setting method please refer to Q & A → How can I change the frequency?

— The FreeSync function is only enabled in HDMI or DisplayPort mode.
Use the HDMI/DP cable provided by the manufacturer when using FreeSync.

— This menu is not available when PIP/PBP Mode is enabled.

If you use the FreeSync function while playing a game, the following symptoms may occur:

- The screen may flicker depending on the type of graphics card, the game option settings, or the video being played. Try the following actions: decrease the game setting values, change the current FreeSync mode to Off, or visit the AMD website to check your graphics driver's version and update it with the latest one.
- While you are using the FreeSync function, the screen may flicker due to variation of the output frequency from the graphics card.

- The response rate during the game may fluctuate depending on the resolution. A higher resolution generally decreases the response rate.
- The sound quality of the monitor may be degraded.

— If you encounter any issues when using the function, contact the Samsung Service Centre.

— If you change the screen resolution while the function is On, the screen may intermittently blank out due to the graphic card. Set FreeSync to Off and change the resolution.

— The function is unavailable in the devices (e.g. AV devices) that have no AMD graphic card. If the function is applied, the screen may have malfunction.

FreeSync Max Resolution

- HDMI: 2560 x 1440 @ 72 Hz
- DisplayPort: 2560 x 1440 @ 75 Hz

The models in the Graphics Cards list supports FreeSync

FreeSync can only be used with specific AMD graphics card models. Refer to the following list for supported graphics cards:

Make sure to install the latest official graphics drivers from AMD that support FreeSync.

— For additional AMD graphics card models that support the FreeSync feature, visit the official AMD website.

— Select FreeSync Off if you are using a graphics card from a different manufacturer.

— When applying the FreeSync function via the HDMI cable, it may fail to work due to the bandwidth limitation of certain AMD graphics card.

- Radeon™ RX Vega series
- Radeon™ RX 500 series
- Radeon™ RX 400 series
- Radeon™ R9/R7 300 series (excluding R9 370/X, R7 370/X, R7 265)
- Radeon™ Pro Duo (2016 edition)
- Radeon™ R9 Nano series
- Radeon™ R9 Fury series
- Radeon™ R9/R7 200 series (excluding R9 270/X, R9 280/X)

Volume

Change the Volume setting.

Eco Saving Plus

Reduce energy consumption compared to consumption at the maximum brightness level.

— This option is not available when Picture Mode is in Dynamic Contrast mode.

— This menu is not available when Game Mode is enabled.

— This menu is not available when Eye Saver Mode is enabled.

— This menu is not available when PIP/PBP Mode is enabled.

- Off: Deactivate the Eco Saving Plus function.
- Auto: The power consumption will automatically be reduced by about 10% over the current setting. (The reduction of power consumption depends on the customer screen brightness condition.)
- Low: Saves up to 25 % energy compared to the maximum brightness.
- High: Saves up to 50 % energy compared to the maximum brightness.

Off Timer Plus

Configuring Off Timer

Off Timer: Turn on Off Timer mode.

Turn Off After: The off timer can be set within a range of 1 to 23 hours. The product will automatically power off after the specified number of hours.

— This option is only available when Off Timer is set to On.

— For products for the market in some regions, the Off Timer is set to automatically activate 4 hours after the product powers on. This is done in accordance with power supply regulations. If you do not want the timer to activate, go to ☰ → System → Off Timer Plus and set Off Timer to Off.

Configuring Eco Timer

Eco Timer: Turn on Eco Timer mode.

Eco Off After: The Eco Timer can be set between 10 and 180 minutes. The product will automatically power off after the specified time has elapsed.

— This option is only available when Eco Timer is set to On.

PC/AV Mode

Set PC/AV Mode to AV. The picture size will be enlarged.

This option is useful when you view a movie.

- PC: Set to PC when connected to a PC.
- AV: Set to AV when connected to an AV device.

— Products with a display area of 16:9 or 16:10 are only supported.

— If the product is in HDMI, DisplayPort mode and the screen says Check the cable connection and the settings of the source device. press the JOG button to display the Function Key Guide screen and then select ☰ → System → PC/AV Mode → HDMI, DisplayPort → PC or AV.

Auto Source Switch

By activating, a new connected source is displayed automatically.

— This function may not be supported depending on the model or geographical area.

Key Repeat Time

Control the response rate of a button when the button is pressed.

Acceleration, 1 sec, or 2 sec can be selected. If No Repeat is selected, a command responds only once when a button is pressed.

Power LED On

Configure the settings to enable or disable the power LED located at the lower part of the product.

- Working: The power LED is on when the product is turned on.
- Stand-by: The power LED is on when the product is turned off.

Chapter 08
Support

Function Key Guide → ☰ → Support

— The functions available may vary depending on the product model. The colour and shape of parts may differ from what is shown. Specifications are subject to change without notice to improve quality.

Self Diagnosis

Perform this test when you experience a problem with your monitor's picture.

— Never turn off the power nor change the input source during self diagnosis. If possible, try not to interrupt testing.

Software Update

Update software using an update file on a USB device.

1 Save the update file (in .bin format) that you downloaded from the Samsung Electronics website (http://www.samsung.com/sec) to a USB device.

2 Connect the USB device to the SERVICE port (⇜ (SERVICE)) on the monitor.
Select ☰ → Support → Software Update.

3 Follow the instructions on the screen to proceed with update.

4 Your product will turn itself off and on again automatically after completing update, and then turn off your product.

5 Remove the power cord from the power outlet and then reconnect the cord after turning off.

— To perform software update by using a USB device, first format the USB device to FAT32.

— When updating by a USB device, be sure to use the device whose version of USB 3.0 or lower.

— When performing update, make sure that only one BIN file (.bin) is saved in the root directory.

— If the No USB devices detected. Please check and try again. message is displayed, this is probably due to the following reasons.

  — A USB device is not connected to the SERVICE port (⇜ (SERVICE)).

  — The files in the connected USB device are not compatible formats.

  — There are no valid update files found in the connected USB device. (There are no update files saved in the memory or the file names are incorrect.)

  — The update will not start if the downloaded software does not match the software installed on the monitor. To check the software for consistency, select Menu (☰) → Support → Information.

— Do not turn off the product. And prevent the updating from any interruption as far as possible. In general, the product returns to the previous version if an update is interrupted.

Information

View the current input source mode, frequency and resolution that are in use and the current product version.

Reset All

Return all the settings for the product to the default factory settings.

Chapter 09
Installing the Software

Easy Setting Box



Easy Setting Box enables users to use the product by partitioning multiple sections.

To install the latest version of **Easy Setting Box**, download it from the Samsung Electronics website at http://www.samsung.com.

— The software may not work properly if you do not restart the PC after the installation.

— The **Easy Setting Box** icon may not appear depending on the PC system and the product specifications.

— If the shortcut icon does not appear, press the F5 key.

Restrictions and Problems with the Installation

The **Easy Setting Box** installation may be affected by the Graphics Card, Motherboard and the Networking Environment.

System Requirements

OS	Hardware
• Windows 7 32Bit/64Bit • Windows 8 32Bit/64Bit • Windows 8.1 32Bit/64Bit • Windows 10 32Bit/64Bit	• At least 32MB of memory • At least 60MB of free space on the hard disk drive

Driver Installation

To install the latest version of the product driver, download it from the Samsung Electronics website at http://www.samsung.com.

— You can set the optimum resolution and frequency for this product by installing the corresponding drivers.

Chapter 10
Troubleshooting Guide

Requirements Before Contacting Samsung Customer Service Centre

— Before calling Samsung Customer Service Centre, test your product as follows. If the problem persists, contact Samsung Customer Service Centre.

Product diagnosis (Screen issue)

If a problem occurs with the product screen, run Self Diagnosis to check that the product is working properly.

Checking the Resolution and Frequency

If a resolution that is not supported (see the Standard Signal Mode Table) is selected, the Not Optimum Mode message may appear for a short time or the screen may not be displayed properly.

— The displayed resolution may vary, depending on the PC system settings and cables.

Check the following.

Installation issue

The screen keeps switching on and off.

Check the cable connection between the product and PC, and ensure the connectors are locked.

Blank spaces are found on all four sides of the screen when an HDMI or HDMI-DVI cable is connected to the product and PC.

The blank spaces found on the screen have nothing to do with the product.

Blank spaces on the screen are caused by the PC or graphics card. To resolve the problem, adjust the screen size in the HDMI or DVI settings for the graphics card.

If the graphics card settings menu does not have an option to adjust the screen size, update the graphics card driver to the latest version.

(Please contact the graphics card or PC manufacturer for further details about how to adjust the screen settings.)

Screen issue

The power LED is off. The screen will not switch on.

Check that the power cable is connected properly.

If a problem occurs with the product screen, run Self Diagnosis to check that the product is working properly.

The message Check the cable connection and the settings of the source device. appears.

Check that the cable is properly connected to the product.

Check that the device connected to the product is powered on.

If the product is in HDMI or DisplayPort mode, press the JOG button to display the Function Key Guide screen and select the ☰ → System → PC/AV Mode → HDMI, DisplayPort → PC or AV.

Not Optimum Mode is displayed.

This message appears when the signal from the graphics card exceeds the maximum resolution or frequency for the product.

Change the maximum resolution and frequency to suit the product performance, referring to Standard Signal Mode Table (P.39).

The images on the screen look distorted.

Check the cable connection to the product.

The screen is not clear. The screen is blurry.

Remove any accessories (video extension cable, etc.) and try again.

Set the resolution and frequency to the recommended level.

The screen appears unstable and shaky. There are shadows or ghost images left on the screen.

Check that the resolution and frequency for the PC are within the range of resolution and frequency compatible with the product. Next, if required, change the settings, referring to Standard Signal Mode Table (P.39) in this manual and the Information menu on the product.

The screen is too bright. The screen is too dark.

Adjust Brightness and Contrast.

Screen colour is inconsistent.

Change the Color settings.

The colours on the screen have a shadow and are distorted.

Change the Color settings.

White does not really look white.

Change the Color settings.

There is no image on the screen and the power LED blinks every 0.5 to 1 second.

The product is operating in power-saving mode.

Press any key on the keyboard or move the mouse to return to normal operating mode.

Text is blurry.

If using a Windows OS (e.g. Windows 7, Windows 8, Windows 8.1 or Windows 10): Go to **Control Panel** → **Fonts** → **Adjust ClearType text** and change **Turn on ClearType**.

Video playback is choppy.

Playback of high-definition large video files can be choppy. This may be because the video player is not optimised for the PC resource.

Try playing the file on another video player.

Sound issue

There is no sound.

Re-check the condition of the connected audio cable and/or adjust the volume.

Check the volume.

Check whether audio is set to mute.

The volume is too low.

Adjust the volume.

If the volume is still low after turning it up to the maximum level, adjust the volume on your PC sound card or software programme.

Video is available but there is no sound.

Sound cannot be heard if an HDMI-DVI cable is used to connect the input device.

Connect the device using an HDMI cable or a DP cable.

Source device issue

A beeping sound is heard when my PC is booting.

If a beeping sound is heard when your PC is booting, have your PC serviced.

Q & A

Refer to the user manual for your PC or graphics card for further instructions on adjustment.

How can I change the frequency?

Set the frequency on your graphics card.

- Windows 7: Go to **Control Panel** → **Appearance and Personalization** → **Display** → **Screen Resolution** → **Advanced settings** → **Monitor**, and adjust **Screen Refresh Rate** under **Monitor settings**.
- Windows 8(Windows 8.1): Go to **Settings** → **Control Panel** → **Appearance and Personalization** → **Display** → **Screen Resolution** → **Advanced settings** → **Monitor**, and adjust **Refresh rate** under **Monitor settings**.
- Windows 10: Go to **Settings** → **System** → **Display** → **Advanced display settings** → **Display adapter properties** → **Monitor**, and adjust **Screen refresh rate** under **Monitor settings**.

How can I change the resolution?

- Windows 7: Go to **Control Panel** → **Appearance and Personalization** → **Display** → **Screen Resolution** → **Adjust Resolution**.
- Windows 8(Windows 8.1): Go to **Settings** → **Control Panel** → **Appearance and Personalization** → **Display** → **Adjust Resolution**, and adjust the resolution.
- Windows 10: Go to **Settings** → **System** → **Display** → **Advanced display settings**, and adjust the resolution.

How do I set power-saving mode?

- Windows 7: Go to **Control Panel** → **Appearance and Personalization** → **Personalization** → **Screen Saver Settings** → **Power options** or BIOS SETUP on the PC.
- Windows 8(Windows 8.1): Go to **Settings** → **Control Panel** → **Appearance and Personalization** → **Personalize** → **Screen Saver Settings** → **Power options** or BIOS SETUP on the PC.
- Windows 10: Go to **Settings** → **Personalization** → **Lock screen** → **Screen timeout settings** → **Power & sleep** or BIOS SETUP on the PC.

Chapter 11
Specifications

General

Model Name	F27T85*
Size	27 Class (26.9 Inches / 68.4 cm)
Display area	596.74 mm (H) x 335.66 mm (V)
Pixel Pitch	0.2331 mm (H) x 0.2331 mm (V)
Maximum Pixel Clock	250 MHz
Power Supply	AC100-240V~ 50/60Hz Refer to the label at the back of the product as the standard voltage can vary in different countries.
Signal connectors	HDMI, DisplayPort
Environmental conditions	**Operating** Temperature: 10 °C – 40 °C (50 °F – 104 °F) Humidity: 10 % – 80 %, non-condensing
	Storage Temperature: -20 °C – 45 °C (-4 °F – 113 °F) Humidity: 5 % – 95 %, non-condensing

— Plug-and-Play
This product can be installed and used with any Plug-and-Play compatible systems. Two-way data exchange between the product and PC system optimises the product settings. Product installation takes place automatically. However, you can customise the installation settings if desired.

— Panel Dots (Pixels)
Due to the nature of the manufacturing of this product, approximately 1 pixel per million (1ppm) may be brighter or darker on the LCD panel. This does not affect product performance.

— The above specifications are subject to change without notice to improve quality.

— For detailed device specifications, visit the Samsung Electronics website.

Standard Signal Mode Table

Model Name		F27T85*
Synchronization	Horizontal Frequency	71.3 ~ 117 kHz
	Vertical Frequency	48 ~ 76 Hz
Resolution	Optimum Resolution	2560 x 1440 @ 60 Hz
	Maximum Resolution	2560 x 1440 @ 72 Hz (HDMI)
		2560 x 1440 @ 75 Hz (DisplayPort)

If a signal that belongs to the following standard signal modes is transmitted from your PC, the screen will automatically be adjusted. If the signal transmitted from the PC does not belong to the standard signal modes, the screen may be blank even though the power LED turns on. In such a case, change the settings according to the following table by referring to the graphics card user manual.

Resolution	Horizontal Frequency (kHz)	Vertical Frequency (Hz)	Pixel Clock (MHz)	Sync Polarity (H/V)
IBM, 720 x 400	31.469	70.087	28.322	-/+
VESA, 640 x 480	31.469	59.940	25.175	-/-
MAC, 640 x 480	35.000	66.667	30.240	-/-
VESA, 640 x 480	37.861	72.809	31.500	-/-
VESA, 640 x 480	37.500	75.000	31.500	-/-
VESA, 800 x 600	35.156	56.250	36.000	+/+
VESA, 800 x 600	37.879	60.317	40.000	+/+
VESA, 800 x 600	48.077	72.188	50.000	+/+
VESA, 800 x 600	46.875	75.000	49.500	+/+
MAC, 832 x 624	49.726	74.551	57.284	-/-
VESA, 1024 x 768	48.363	60.004	65.000	-/-
VESA, 1024 x 768	56.476	70.069	75.000	-/-
VESA, 1024 x 768	60.023	75.029	78.750	+/+
VESA, 1152 x 864	67.500	75.000	108.000	+/+
MAC, 1152 x 870	68.681	75.062	100.000	-/-
VESA, 1280 x 720	45.000	60.000	74.250	+/+
VESA, 1280 x 800	49.702	59.810	83.500	-/+
VESA, 1280 x 1024	63.981	60.020	108.000	+/+

Resolution	Horizontal Frequency (kHz)	Vertical Frequency (Hz)	Pixel Clock (MHz)	Sync Polarity (H/V)
VESA, 1280 x 1024	79.976	75.025	135.000	+/+
VESA, 1440 x 900	55.935	59.887	106.500	-/+
VESA, 1600 x 900RB	60.000	60.000	108.000	+/+
VESA, 1680 x 1050	65.290	59.954	146.250	-/+
VESA, 1920 x 1080	67.500	60.000	148.500	+/+
VESA, 2560 x 1440	88.787	59.951	241.500	+/-

— Horizontal Frequency
The time required to scan a single line from the left to the right side of the screen is called a horizontal cycle. The reciprocal number of a horizontal cycle is called horizontal frequency. Horizontal frequency is measured in kHz.

— Vertical Frequency
Repeating the same picture dozens of times per second allows you to view natural pictures. The repeat frequency is called "vertical frequency" or "refresh rate" and is indicated in Hz.

— This product can be set to only one resolution for each screen size to obtain the optimum picture quality due to the nature of the panel. Using a resolution other than the specified resolution may degrade the picture quality. To avoid this, it is recommended that you select the optimum resolution specified for your product.

— Some resolutions listed in the table above may not be available depending on graphics card specifications.

Chapter 12
Appendix

Responsibility for the Pay Service (Cost to Customers)

When the service is requested, in spite of in warranty, we may charge you for a visit from a service technician in the following cases.

Not a product defect

Cleaning of the product, Adjustment, Explanation, Re-installation and etc.

- If a service technician is requested to give instructions on how to use product or simply adjusts options without disassembling product.
- If a defect is caused by external environmental factors (Internet, Antenna, Wired Signal, etc.)
- If a product is reinstalled or devices are connected additionally after installing the purchased product for the first time.
- If a product is reinstalled to move to a different spot or to move to a different house.
- If the customer requests instructions on how to use another company's product.
- If customer requests instructions on how to use the network or another company's Programme.
- If customer requests software installation and setup for the product.
- If a service technician removes/cleans dusts or foreign materials inside of the product.
- If customer requests an installation additionally after purchasing a product through home-shopping or online.

A Product damage caused by customer's fault

Product damage caused by customer's mishandling or wrong repair

If a product damage is caused by;

- External impact or drop.
- Use of supplies or separately sold product unspecified by Samsung.
- Repair from a person besides an engineer of outsourcing service company or partner of Samsung Electronics Co., Ltd.
- Remodeling or repairing the product by customer.
- Using it with incorrect voltage or non-authorised electrical connections.
- Not following the "cautions" in User Manual.

Others

- If product fails by natural disaster. (lightning, fire, earthquake, flood damage, etc)
- If consumable components are all used up. (Battery, Toner, Fluorescent lights, Head, Vibrator, Lamp, Filter, Ribbon, etc.)

If customer requests a service in case the product has no defect, service fee may be charged. So please read User Manual first.

Extended warranty

You can buy an extended warranty within 90 days of purchasing the product. The extended warranty will cover an additional period of 3 years, beyond the standard 3 year warranty. Samsung guarantee that replacement parts will be available for 5 years after the end of production. After 5 years, in the event that the Samsung's service center has run out of replacement parts and cannot repair the product, Samsung will replace your product at no additional charge. If the model you purchased is no longer available, Samsung replace it with the current equivalent model.