

MASTER LEDspot LV AR111

MAS LED ExpertColor 15-75W 927 AR111 40D

Delivering a warm, halogen-like accent beam, MASTER LEDspot LV AR111 is an ideal retrofit solution for spot and general lighting applications in the hospitality and retail industry. It is particularly suitable for general lighting where the light is on all the time, such as creative accent lighting applications in shops, restaurants, hotels, and especially for galleries, exhibitions and museums. The robustly designed MASTER LEDspot LV AR111 offers various beam angles for a clearly defined beam spread. There is no UV or IR in the beam, making it suitable for illuminating heat-sensitive objects (food, organic materials, paintings, etc.). The patented intelligent driver enables broad compatibility with existing electromagnetic and electronic halogen transformers. MASTER LEDspot LV AR111 delivers huge energy savings and minimises maintenance cost without any reduction in brightness.

Product data

General Information	
Cap base	G53 [G53]
Nominal lifetime (nom.)	40000 h
Switching cycle	50000X
Technical type	15-75W

Light Technical	
Colour code	927
Beam Angle (Nom)	40 °
Luminous flux (nom.)	850 lm
Colour designation	Warm white (WW)
Correlated colour temperature (nom.)	2700 K
Luminous efficacy (rated) (nom.)	56.00 lm/W
Colour consistency	<4
Color rendering index (nom.)	97
LLMF at end of nominal lifetime (nom.)	70 %
Luminous Flux in 90° Cone (Rated)	850 lm

Operating and Electrical	
Power (Rated) (Nom)	15 W
Lamp current (nom.)	1800 mA
Wattage equivalent	75 W
Starting time (nom.)	0.5 s
Warm-up time to 60% light (nom.)	0.5 s
Power factor (nom.)	0.7
Voltage (Nom)	ac electronic 12 V

MASTER LEDspot LV AR111

Temperature	
T-Case maximum (nom.)	74 °C

Controls and Dimming	
Dimmable	Yes

Approval and Application	
Energy efficiency label (EEL)	A
Suitable for accent lighting	Yes
Energy Consumption kWh/1000 h	17 kWh

Product Data	
Full product code	871869968702100
Order product name	MAS LED ExpertColor 15-75W 927 AR111 40D
EAN/UPC – product	8718699687021
Order code	68702100
Numerator – quantity per pack	1
Numerator – packs per outer box	6
Material no. (12NC)	929002239302
Net weight (piece)	0.160 kg

Dimensional drawing

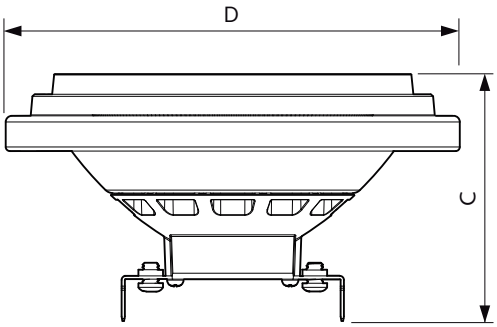

AR111 12V 15-75W 900lm 40D 2700K G53 D

Product	D	C
MAS LED ExpertColor 15-75W 927 AR111 40D	111 mm	62 mm

Photometric data

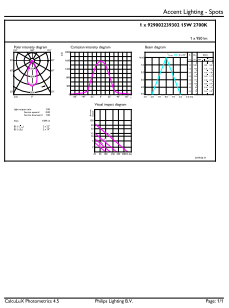

LEDspots 75W G53 AR111 927 40D

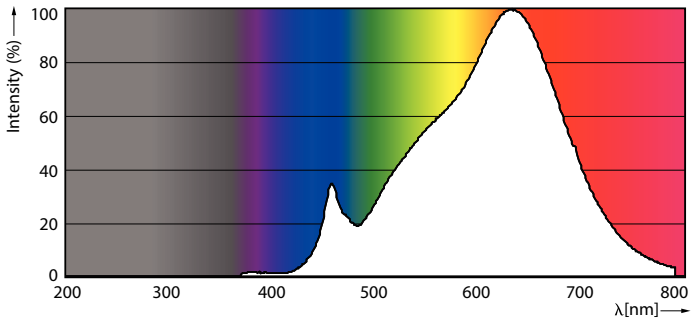

LEDspots 75W G53 AR111 927

MASTER LEDspot LV AR111

Photometric data

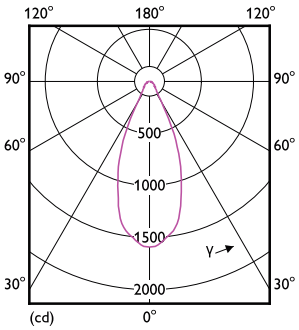

LEDspots 75W G53 AR111 927 40D

Lifetime

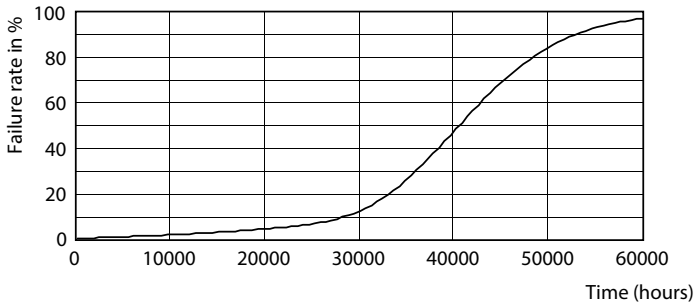

LEDspots LED 40K

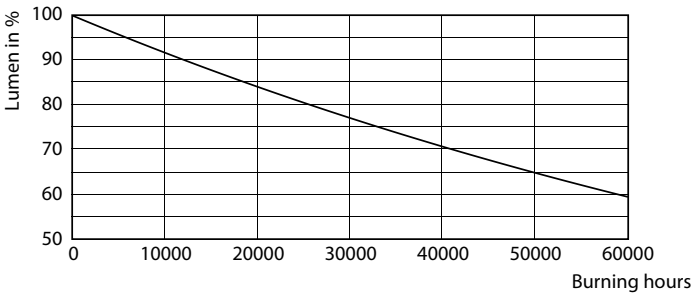

LEDspots LMP 40K

© 2020 Signify Holding All rights reserved. Signify does not give any representation or warranty as to the accuracy or completeness of the information included herein and shall not be liable for any action in reliance thereon. The information presented in this document is not intended as any commercial offer and does not form part of any quotation or contract, unless otherwise agreed by Signify. Philips and the Philips Shield Emblem are registered trademarks of Koninklijke Philips N.V.