

MASTER LEDspot LV AR111

MAS LEDspotLV D 20-100W 930 AR111 24D

Delivering a warm, halogen-like accent beam, MASTER LEDspot LV AR111 is an ideal retrofit solution for spot and general lighting applications in the hospitality and retail industry. It is particularly suitable for general lighting where the light is on all the time, such as creative accent lighting applications in shops, restaurants, hotels, and especially for galleries, exhibitions and museums. The robustly designed MASTER LEDspot LV AR111 offers various beam angles for a clearly defined beam spread. There is no UV or IR in the beam, making it suitable for illuminating heat-sensitive objects (food, organic materials, paintings, etc.). The patented intelligent driver enables broad compatibility with existing electromagnetic and electronic halogen transformers. MASTER LEDspot LV AR111 delivers huge energy savings and minimises maintenance cost without any reduction in brightness.

Product data

General Information	
Cap base	G53 [G53]
Nominal lifetime (nom.)	25000 h
Switching cycle	50000X
Technical type	20-100W

Light Technical	
Colour code	930 [CCT of 3,000 K]
Beam Angle (Nom)	24 °
Luminous flux (nom.)	1200 lm
Luminous intensity (nom.)	3800 cd
Colour designation	White (WH)
Correlated colour temperature (nom.)	3000 K
Luminous efficacy (rated) (nom.)	60.00 lm/W

Colour consistency	<4
Color rendering index (nom.)	91
LLMF at end of nominal lifetime (nom.)	70 %
Luminous Flux in 90° Cone (Rated)	1200 lm

Operating and Electrical	
Power (Rated) (Nom)	20 W
Lamp current (nom.)	2400 mA
Wattage equivalent	100 W
Starting time (nom.)	0.5 s
Warm-up time to 60% light (nom.)	0.5 s
Power factor (nom.)	0.7
Voltage (Nom)	ac electronic 12 V

MASTER LEDspot LV AR111

Temperature	
T-Case maximum (nom.)	80 °C

Controls and Dimming	
Dimmable	Yes

Approval and Application	
Energy efficiency label (EEL)	A
Suitable for accent lighting	Yes
Energy Consumption kWh/1000 h	22 kWh

Product Data	
Full product code	871869970515200
Order product name	MAS LEDspotLV D 20-100W 930 AR111 24D
EAN/UPC – product	8718699705152
Order code	70515200
Numerator – quantity per pack	1
Numerator – packs per outer box	6
Material no. (12NC)	929002050502
Net weight (piece)	0.160 kg

Dimensional drawing

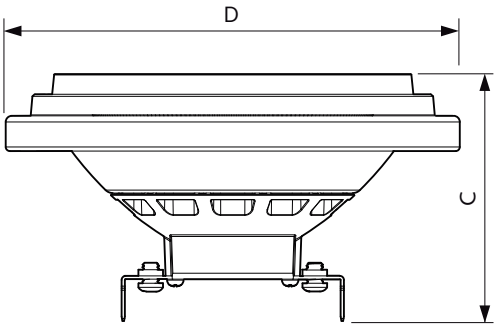

MAS LEDspotLV D 20-100W 930 AR111 24D

Product	D	C
MAS LEDspotLV D 20-100W 930 AR111 24D	111 mm	62 mm

Photometric data

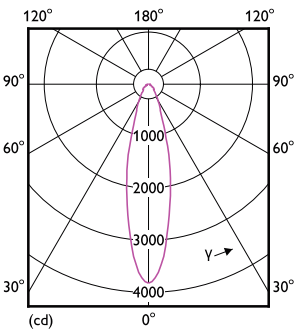

LEDspots 100W G53 AR111 930 24D

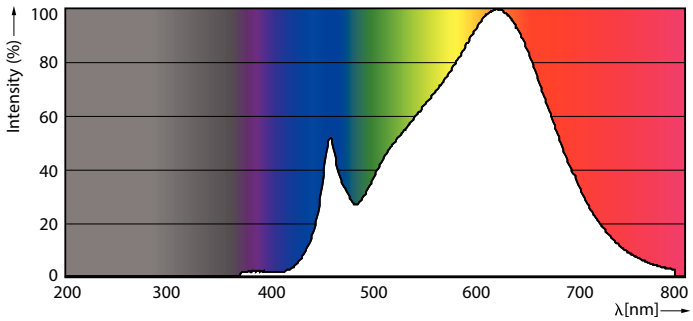

LEDspots 100W G53 AR111 930

MASTER LEDspot LV AR111

Photometric data

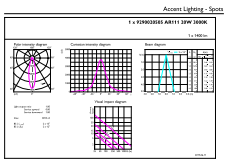

LEDspots 100W G53 AR111 930 24D

Lifetime

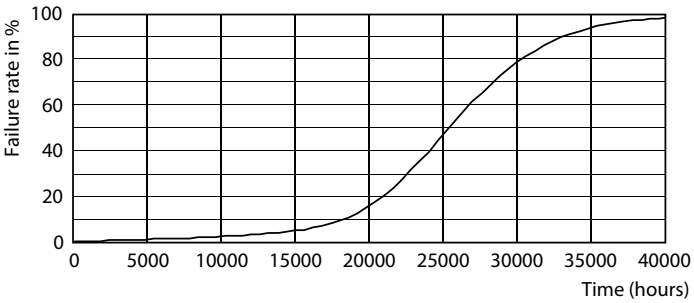

LEDspots LED 25K

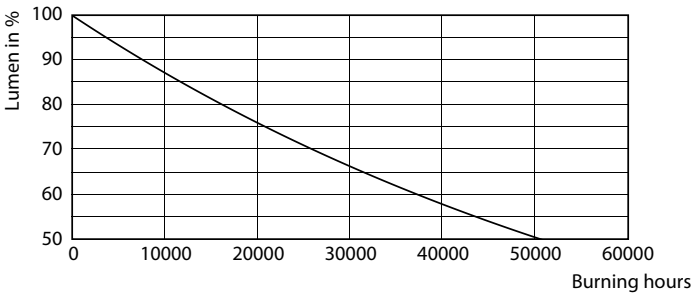

LEDspots LMP 25K

© 2020 Signify Holding All rights reserved. Signify does not give any representation or warranty as to the accuracy or completeness of the information included herein and shall not be liable for any action in reliance thereon. The information presented in this document is not intended as any commercial offer and does not form part of any quotation or contract, unless otherwise agreed by Signify. Philips and the Philips Shield Emblem are registered trademarks of Koninklijke Philips N.V.