


# MASTER LEDspot LV AR111

## MAS LED ExpertColor 11-50W 927 AR111 40D

Delivering a warm, halogen-like accent beam, MASTER LEDspot LV AR111 is an ideal retrofit solution for spot and general lighting applications in the hospitality and retail industry. It is particularly suitable for general lighting where the light is on all the time, such as creative accent lighting applications in shops, restaurants, hotels, and especially for galleries, exhibitions and museums. The robustly designed MASTER LEDspot LV AR111 offers various beam angles for a clearly defined beam spread. There is no UV or IR in the beam, making it suitable for illuminating heat-sensitive objects (food, organic materials, paintings, etc.). The patented intelligent driver enables broad compatibility with existing electromagnetic and electronic halogen transformers. MASTER LEDspot LV AR111 delivers huge energy savings and minimises maintenance cost without any reduction in brightness.

### Product data

| General Information | |
|---|---|
| **Cap base** | G53 [ G53] |
| **Nominal lifetime (nom.)** | 40000 h |
| **Switching cycle** | 50000X |
| **Technical type** | 11-50W |

| Light Technical | |
|---|---|
| **Colour code** | 927 |
| **Beam Angle (Nom)** | 40 ° |
| **Luminous flux (nom.)** | 600 lm |
| **Colour designation** | Warm white (WW) |
| **Correlated colour temperature (nom.)** | 2700 K |
| **Luminous efficacy (rated) (nom.)** | 54.00 lm/W |
| **Colour consistency** | <4 |
| **Color rendering index (nom.)** | 97 |
| **LLMF at end of nominal lifetime (nom.)** | 70 % |
| **Luminous Flux in 90° Cone (Rated)** | 600 lm |

| Operating and Electrical | |
|---|---|
| **Power (Rated) (Nom)** | 11 W |
| **Lamp current (nom.)** | 1300 mA |
| **Wattage equivalent** | 50 W |
| **Starting time (nom.)** | 0.5 s |
| **Warm-up time to 60% light (nom.)** | 0.5 s |
| **Power factor (nom.)** | 0.7 |
| **Voltage (Nom)** | ac electronic 12 V |

# MASTER LEDspot LV AR111

| Temperature | |
|---|---|
| T-Case maximum (nom.) | 70 °C |

| Controls and Dimming | |
|---|---|
| Dimmable | Yes |

| Approval and Application | |
|---|---|
| Energy efficiency label (EEL) | A |
| Suitable for accent lighting | Yes |
| Energy Consumption kWh/1000 h | 13 kWh |

| Product Data | |
|---|---|
| Full product code | 871869968694900 |
| Order product name | MAS LED ExpertColor 11-50W 927 AR111 40D |
| EAN/UPC – product | 8718699686949 |
| Order code | 68694900 |
| Numerator – quantity per pack | 1 |
| Numerator – packs per outer box | 6 |
| Material no. (12NC) | 929002238802 |
| Net weight (piece) | 0.160 kg |

## Dimensional drawing

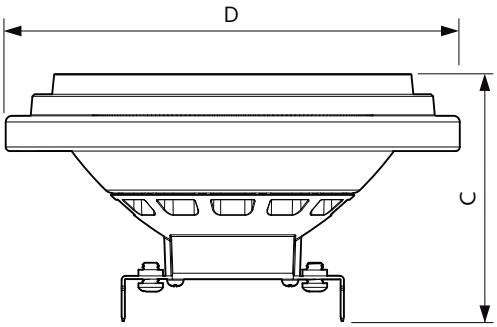


AR111 12V 11-50W 650lm 40D 2700K G53 D

| Product | D | C |
|---|---|---|
| MAS LED ExpertColor 11-50W 927 AR111 40D | 111 mm | 62 mm |

## Photometric data

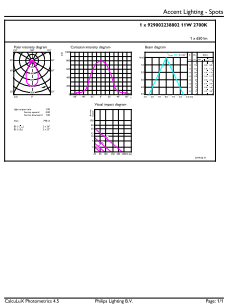

LEDspots 50W G53 AR111 927 40D

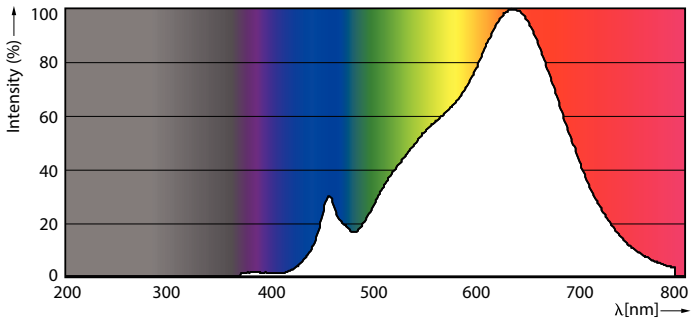


LEDspots 50W G53 AR111 927

# MASTER LEDspot LV AR111

## Photometric data

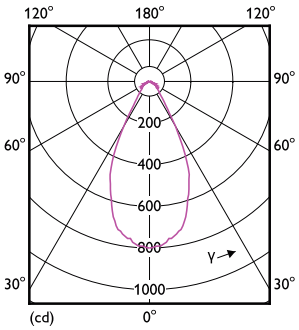


**LEDspots 50W G53 AR111 927 40D**

## Lifetime

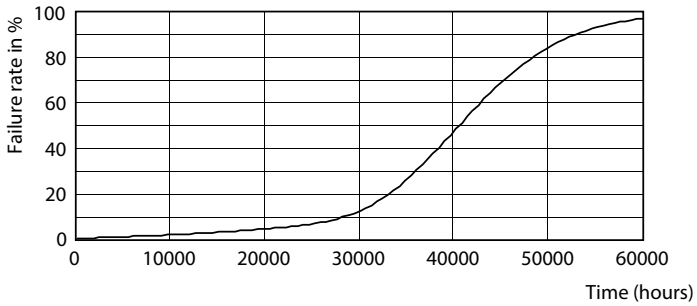


**LEDspots LED 40K**

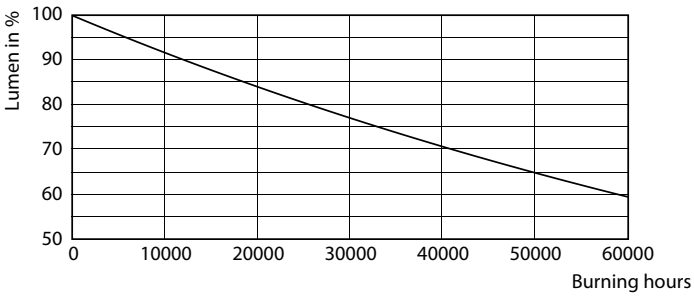


**LEDspots LMP 40K**

© 2020 Signify Holding All rights reserved. Signify does not give any representation or warranty as to the accuracy or completeness of the information included herein and shall not be liable for any action in reliance thereon. The information presented in this document is not intended as any commercial offer and does not form part of any quotation or contract, unless otherwise agreed by Signify. Philips and the Philips Shield Emblem are registered trademarks of Koninklijke Philips N.V.