DATASHEET - AING8

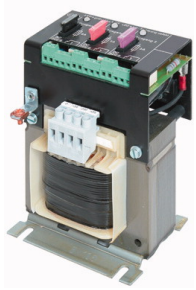

Power supply unit, 1p, 192VA, prim 230VAC, sec. 24VAC, 24 V DC, 10 V DC

Part no.	**AING8**
Catalog No.	**269517**
Alternate Catalog No.	**AING8**

Powering Business Worldwide™

Delivery program

Product range			Universal power supply unit AING
Basic function			Single-phase power supply
			Every output voltage a fuse, an LED and a changeover contact for monitoring and annunciation Non-standard voltages on request
Rated input voltage		V	230± 5 %
Rated output voltage		V	24 AC, 10 DC, 24 DC
Rated power		kVA	0.192
Max. output current		A	8 1 3
Cu factor 3,60			

Notes

- Circuit diagram:

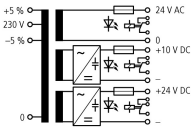

Signal contacts

Switching voltage max. 250 V AC/110 V DC

max. 1 A

Switching duty 62 VA/30 W

LED indication

- Output voltage present: LED = green
- Fuse fault/missing: LED = red

Size/part no. FK2 fuses are used.

Technical data

General

Standards			
Built and tested to			Safety transformer to IEC/EN 61558-2-2/2-6 VDE 0570 part 2-2/2-6
Suitable for use to			IEC/EN 60204-1 VDE 0113
Ambient temperature			-25 - 40

Characteristics

Terminations			●
Insulation class			B
Rated frequency		Hz	50 - 60
Primary tapping			± 5 %
Degree of Protection			IP20
Separate windings			●
Fully vacuum-impregnated			●
Reinforced insulation			●
Rated duty factor		% DF	100

Design verification as per IEC/EN 61439

Technical data for design verification			
Rated operational current for specified heat dissipation	I_n	A	0
Heat dissipation per pole, current-dependent	P_{vid}	W	0
Equipment heat dissipation, current-dependent	P_{vid}	W	0
Static heat dissipation, non-current-dependent	P_{vs}	W	50
Heat dissipation capacity	P_{diss}	W	0
Operating ambient temperature min.		°C	-25
Operating ambient temperature max.		°C	40
IEC/EN 61439 design verification			
10.2 Strength of materials and parts			
10.2.2 Corrosion resistance			Meets the product standard's requirements.
10.2.3.1 Verification of thermal stability of enclosures			Meets the product standard's requirements.
10.2.3.2 Verification of resistance of insulating materials to normal heat			Meets the product standard's requirements.
10.2.3.3 Verification of resistance of insulating materials to abnormal heat and fire due to internal electric effects			Meets the product standard's requirements.
10.2.4 Resistance to ultra-violet (UV) radiation			Meets the product standard's requirements.
10.2.5 Lifting			Does not apply, since the entire switchgear needs to be evaluated.
10.2.6 Mechanical impact			Does not apply, since the entire switchgear needs to be evaluated.
10.2.7 Inscriptions			Meets the product standard's requirements.
10.3 Degree of protection of ASSEMBLIES			Does not apply, since the entire switchgear needs to be evaluated.
10.4 Clearances and creepage distances			Meets the product standard's requirements.
10.5 Protection against electric shock			Does not apply, since the entire switchgear needs to be evaluated.
10.6 Incorporation of switching devices and components			Does not apply, since the entire switchgear needs to be evaluated.
10.7 Internal electrical circuits and connections			Is the panel builder's responsibility.
10.8 Connections for external conductors			Is the panel builder's responsibility.
10.9 Insulation properties			
10.9.2 Power-frequency electric strength			Is the panel builder's responsibility.
10.9.3 Impulse withstand voltage			Is the panel builder's responsibility.
10.9.4 Testing of enclosures made of insulating material			Is the panel builder's responsibility.
10.10 Temperature rise			The panel builder is responsible for the temperature rise calculation. Eaton will provide heat dissipation data for the devices.
10.11 Short-circuit rating			Is the panel builder's responsibility. The specifications for the switchgear must be observed.
10.12 Electromagnetic compatibility			Is the panel builder's responsibility. The specifications for the switchgear must be observed.
10.13 Mechanical function			The device meets the requirements, provided the information in the instruction leaflet (IL) is observed.

Technical data ETIM 7.0

PLC's (EG000024) / PLC system power supply (EC000599)		
Electric engineering, automation, process control engineering / Control / Programmable logic control (SPS) / SPS system power supply (ecl@ss10.0.1-27-24-22-09 [AKE532014])		
Input voltage at AC 50 Hz	V	230 - 230
Input voltage at AC 60 Hz	V	230 - 230
Input voltage at DC	V	0 - 0
Type of voltage (input voltage)		AC
Max. input current AC 50 Hz	A	0.83
Max. input current AC 60 Hz	A	0.83
Max. input current DC	A	0
Type of output voltage		AC/DC
Output voltage at AC 50 Hz	V	24 - 24
Output voltage at AC 60 Hz	V	24 - 24
Output voltage at DC	V	24 - 24
Max. output current AC 50 Hz	A	8
Max. output current AC 60 Hz	A	8
Max. output current DC	A	3
Power output	W	192

Redundancy			No
Suitable for safety functions			Yes
Width		mm	110
Height		mm	155
Depth		mm	90

Dimensions

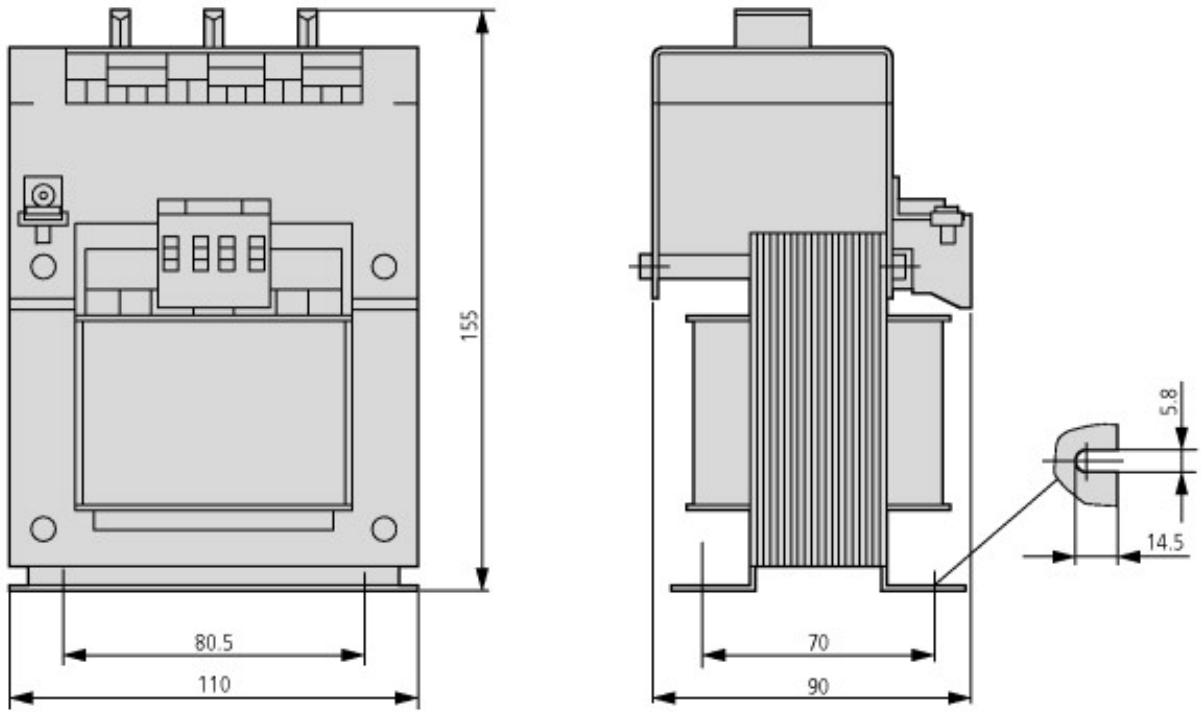

© 07/2021 by Eaton Industries GmbH