

Coreline tempo X-Large

BVP140 LED480-4S 40K3/740 PSU OFA52

CORELINE TEMPO X-LARGE - LED module 48000 lm - 740 neutral white - Optiflux asymmetrical axis angle 52°

Coreline tempo X-Large delivers on the Coreline promise of innovative, easy to use and high quality luminaires;Designed to be a plug-and-play 1:1 retrofit of conventional floodlights with short payback time, its extensive options open a lot more opportunities to optimize performance and savings in many different applications, such as recreational sports facilities, industrial/commercial areas, parking lots, etc.;This floodlight is equipped with the QR code-based Philips Service tag, which supports installation and maintenance work and enables you to create your digital library of lighting assets and spare parts.;As an option, Coreline tempo X-Large is also ready to be connected to lighting asset management systems such as Interact City and Interact Sports recreational

Product data

General Information	
Lamp family code	LED480 [LED module 48000 lm]
Light source color	740 neutral white
Light source replaceable	Yes
Number of gear units	2 units
Driver/power unit/transformer	Power supply unit
Driver included	Yes
Optical cover/lens type	Flat glass
Luminaire light beam spread	103° - 8° x 57°
Control interface	-
Connection	Connection unit 3-pole

Cable	Cable 1.0 m with plug Wieland/Adels compatible 3-pole
Protection class IEC	Safety class I
Flammability mark	For mounting on easily flammable surfaces
CE mark	CE mark
ENEC mark	ENEC plus mark
Warranty period	5 years
Optic type outdoor	Optiflux asymmetrical axis angle 52°
Remarks	* At extreme ambient temperatures the luminaire might automatically dim down to protect components

Coreline tempo X-Large

Constant light output	No
Number of products on MCB of 16 A type B	4
EU RoHS compliant	Yes
Light source engine type	LED
Serviceability class	Class C, luminaire without serviceable parts, not serviceable
Product family code	BVP140 [CORELINE TEMPO X-LARGE]

Light Technical

Upward light output ratio	0
Standard tilt angle posttop	0°
Standard tilt angle side entry	0°

Operating and Electrical

Input Voltage	220 to 240 V
Input Frequency	50 to 60 Hz
Inrush current	53 A
Inrush time	0.3 ms
Power Factor (Min)	0.99

Controls and Dimming

Dimmable	No

Mechanical and Housing

Housing Material	Aluminum die cast
Reflector material	-
Optic material	Acrylate
Optical cover/lens material	Glass
Fixation material	Steel
Mounting device	Mounting bracket adjustable
Optical cover/lens shape	Flat
Optical cover/lens finish	Clear
Overall length	540 mm
Overall width	560 mm
Overall height	70 mm
Effective projected area	0.26 m²
Color	Gray
Dimensions (Height x Width x Depth)	70 x 560 x 540 mm (2.8 x 22 x 21.3 in)

Approval and Application

Ingress protection code	IP66 [Dust penetration-protected, jet-proof]
Mech. impact protection code	IK08 [5 J vandal-protected]
Surge Protection (Common/Differential)	-

Initial Performance (IEC Compliant)

Initial luminous flux (system flux)	40320 lm
Luminous flux tolerance	+/-7%
Initial LED luminaire efficacy	137 lm/W
Init. Corr. Color Temperature	4000 K
Init. Color Rendering Index	>70
Initial chromaticity	(0.38, 0.38) SDCM <5
Initial input power	295 W
Power consumption tolerance	+/-11%

Over Time Performance (IEC Compliant)

Control gear failure rate at median useful life 75000 h	7.6 %
Control gear failure rate at median useful life 100000 h	10 %
Lumen maintenance at median useful life* 75000 h	L90
Lumen maintenance at median useful life* 100000 h	L89

Application Conditions

Ambient temperature range	-40 to +50 °C
Performance ambient temperature Tq	25 °C

Product Data

Full product code	871869987278600
Order product name	BVP140 LED480-4S 40K3/740 PSU OFA52
EAN/UPC - Product	8718699872786
Order code	912300024334
Numerator - Quantity Per Pack	1
Numerator - Packs per outer box	1
Material Nr. (12NC)	912300024334
Net Weight (Piece)	17.010 kg

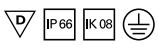

Coreline tempo X-Large

Dimensional drawing

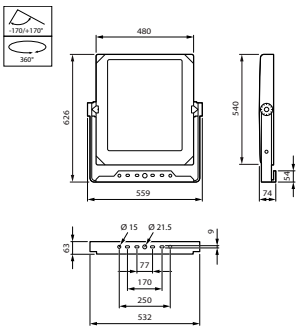

CoreLine Tempo BVP110/120/125/130/140

Photometric data

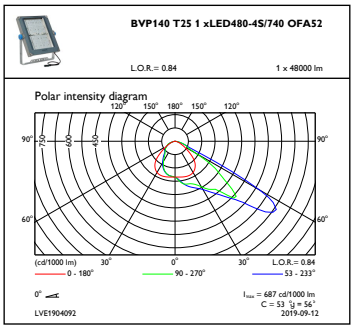

OFPC1_BVP140T251xLED480-4S740OFA52

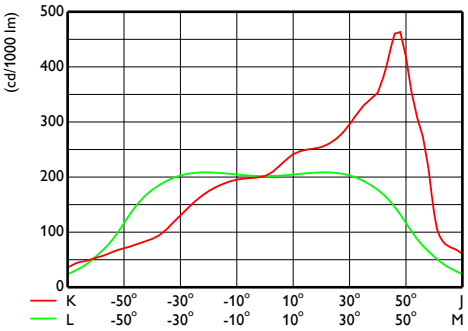

OFCS1_BVP140T251xLED480-4S740OFA52

© 2020 Signify Holding All rights reserved. Signify does not give any representation or warranty as to the accuracy or completeness of the information included herein and shall not be liable for any action in reliance thereon. The information presented in this document is not intended as any commercial offer and does not form part of any quotation or contract, unless otherwise agreed by Signify. Philips and the Philips Shield Emblem are registered trademarks of Koninklijke Philips N.V.