ideacentre 310S Series Hardware Maintenance Manual

Machine Types:90GA [310S-08 I A P /Energy Star] / 90G9 [310S-08ASR/Energy Star]

ideacentre 310S Series
Hardware Maintenance Manual

Machine Types:90GA [310S-08 I A P /Energy Star] / 90G9 [310S-08ASR/Energy Star]

First Edition (February 2017)4th

© Copyright Lenovo 2016.

LIMITED AND RESTRICTED RIGHTS NOTICE: If data or software are delivered pursuant a General Services Administration “GSA” contract, use, reproduction, or disclosure is subject to restrictions set forth in Contract No. GS-35F-05925

Contents

Chapter 1. About this manual 1
Important Safety Information 1

Chapter 2. Safety information 3
General safety 3
Electrical safety 3
Safety inspection guide 5
Handling electrostatic discharge-sensitive devices 5
Grounding requirements 6
Safety notices 6

Chapter 3. General information 9
Specifications 9

Chapter 4. General Checkout 11

Chapter 5. Using the Setup Utility. . . 13
Starting the Lenovo BIOS Setup Utility program . 13
Viewing and changing settings 13
Using passwords. 13
Enabling or disabling a device 15
Selecting a startup device 16
Exiting the Lenovo BIOS Setup Utility program . . 17

Chapter 6. Symptom-to-FRU Index . . 19
Hard disk drive boot error 19
Power Supply Problems 19
Additional Service Information 19
POST error codes 20
Undetermined problems 20

Chapter 7. Locations 23
Identifying internal components 23
Identifying parts on the motherboard 24

Chapter 8. Replacing hardware 27
General information. 27
Replacing the keyboard and mouse 28
Replacing the adapter. 28
Removing the computer cover 28
Removing the front bezel 29
Replacing a hard disk drive. 30
Replacing an optical drive 30
Replacing a graphics card 31
Replacing a memory module 32
Replacing the heat-sink assembly 33
Replacing the Wi-Fi card. 33
Replacing the motherboard. 34
Replacing the front I/O bracket, power button and the card reader 35
Ideacentre 310S-08IAP FRU list 39
Ideacentre 310S-08ASR FRU list 46

Chapter 9. General information 55
Additional Service Information 55

© Copyright Lenovo 2016

Chapter 1. About this manual

This manual contains service and reference information for ideacntre 310s series desktop computers listed on the cover. It is intended only for trained servicers who are familiar with Lenovo computer products.

Before servicing a Lenovo product, be sure to read the Safety Information.

The description of the TV card in this manual is only used for the machines which have the TV card. It is invalid for those machines which do not have TV card.

Important Safety Information

Be sure to read all caution and danger statements in this book before performing any of the instructions.

Veuillez lire toutes les consignes de type DANGER et ATTENTION du présent document avant d'exécuter les instructions.

Lesen Sie unbedingt alle Hinweise vom Typ "ACHTUNG" oder "VORSICHT" in dieser Dokumentation, bevor Sie irgendwelche Vorgänge durchführen

Leggere le istruzioni introdotte da ATTENZIONE e PERICOLO presenti nel manuale prima di eseguire una qualsiasi delle istruzioni

Certifique-se de ler todas as instruções de cuidado e perigo neste manual antes de executar qualquer uma das instruções

Es importante que lea todas las declaraciones de precaución y de peligro de este manual antes de seguir las instrucciones.

执行任何说明之前，请确保已阅读本书中的所有警告和危险声明。

執行任何指示前，請確實閱讀本書中的所有警告及危險聲明。

© Copyright Lenovo 2016

Chapter 2. Safety information

This chapter contains the safety information that you need to be familiar with before servicing a computer.

General safety

Follow these rules to ensure general safety:

- Observe good housekeeping in the area of the machines during and after maintenance.
- When lifting any heavy object:
  1. Ensure you can stand safely without slipping.
  2. Distribute the weight of the object equally between your feet.
  3. Use a slow lifting force. Never move suddenly or twist when you attempt to lift.
  4. Lift by standing or by pushing up with your leg muscles; this action removes the strain from the muscles in your back.
     Do not attempt to lift any objects that weigh more than 16 kg (35 lb) or objects that you think are too heavy for you.
- Do not perform any action that causes hazards to the customer, or that makes the equipment unsafe.
- Before you start the machine, ensure that other service representatives and the customer's personnel are not in a hazardous position.
- Place removed covers and other parts in a safe place, away from all personnel, while you are servicing the machine.
- Keep your tool case away from walk areas so that other people will not trip over it.
- Do not wear loose clothing that can be trapped in the moving parts of a machine. Ensure that your sleeves are fastened or rolled up above your elbows. If your hair is long, fasten it.
- Insert the ends of your necktie or scarf inside clothing or fasten it with a nonconductive clip, approximately 8 centimeters (3 inches) from the end.
- Do not wear jewelry, chains, metal-frame eyeglasses, or metal fasteners for your clothing.
  Remember: Metal objects are good electrical conductors.
- Wear safety glasses when you are: hammering, drilling soldering, cutting wire, attaching springs, using solvents, or working in any other conditions that might be hazardous to your eyes.
- After service, reinstall all safety shields, guards, labels, and ground wires. Replace any safety device that is worn or defective.
- Reinstall all covers correctly before returning the machine to the customer.

Electrical safety



CAUTION:
Electrical current from power, telephone, and communication cables can be hazardous. To avoid personal injury or equipment damage, disconnect the attached power cords, telecommunication systems, networks, and modems before you open the computer covers, unless instructed otherwise in the installation and configuration procedures.

© Copyright Lenovo 2016

Observe the following rules when working on electrical equipment.

Important: Use only approved tools and test equipment. Some hand tools have handles covered with a soft material that does not insulate you when working with live electrical currents. Many customers have, near their equipment, rubber floor mats that contain small conductive fibers to decrease electrostatic discharges. Do not use this type of mat to protect yourself from electrical shock.

- Find the room emergency power-off (EPO) switch, disconnecting switch, or electrical outlet. If an electrical accident occurs, you can then operate the switch or unplug the power cord quickly.
- Do not work alone under hazardous conditions or near equipment that has hazardous voltages.
- Disconnect all power before:
  - Performing a mechanical inspection
  - Working near power supplies
  - Removing or installing Field Replaceable Units (FRUs)
- Before you start to work on the machine, unplug the power cord. If you cannot unplug it, ask the customer to power-off the wall box that supplies power to the machine and to lock the wall box in the off position.
- If you need to work on a machine that has exposed electrical circuits, observe the following precautions:
  - Ensure that another person, familiar with the power-off controls, is near you.
    Remember: Another person must be there to switch off the power, if necessary.
  - Use only one hand when working with powered-on electrical equipment; keep the other hand in your pocket or behind your back.
    Remember: There must be a complete circuit to cause electrical shock. By observing the above rule, you may prevent a current from passing through your body.
  - When using a tester, set the controls correctly and use the approved probe leads and accessories for that tester.
  - Stand on suitable rubber mats (obtained locally, if necessary) to insulate you from grounds such as metal floor strips and machine frames.

  Observe the special safety precautions when you work with very high voltages; these instructions are in the safety sections of maintenance information. Use extreme care when measuring high voltages.
- Regularly inspect and maintain your electrical hand tools for safe operational condition.
- Do not use worn or broken tools and testers.
- *Never assume* that power has been disconnected from a circuit. First, *check* that it has been powered-off.
- Always look carefully for possible hazards in your work area. Examples of these hazards are moist floors, nongrounded power extension cables, power surges, and missing safety grounds.
- Do not touch live electrical circuits with the reflective surface of a plastic dental mirror. The surface is conductive; such touching can cause personal injury and machine damage.
- Do not service the following parts with the power on when they are removed from their normal operating places in a machine:
  - Power supply units
  - Pumps
  - Blowers and fans
  - Motor generators

  and similar units. (This practice ensures correct grounding of the units.)
- If an electrical accident occurs:
  - Use caution; do not become a victim yourself.
  - Switch off power.

– Send another person to get medical aid.

Safety inspection guide

The intent of this inspection guide is to assist you in identifying potentially unsafe conditions on these products. Each machine, as it was designed and built, had required safety items installed to protect users and service personnel from injury. This guide addresses only those items. However, good judgment should be used to identify potential safety hazards due to attachment of features or options not covered by this inspection guide.

If any unsafe conditions are present, you must determine how serious the apparent hazard could be and whether you can continue without first correcting the problem.

Consider these conditions and the safety hazards they present:

- Electrical hazards, especially primary power (primary voltage on the frame can cause serious or fatal electrical shock).
- Explosive hazards, such as a damaged CRT face or bulging capacitor
- Mechanical hazards, such as loose or missing hardware

The guide consists of a series of steps presented in a checklist. Begin the checks with the power off, and the power cord disconnected.

Checklist:

1. Check exterior covers for damage (loose, broken, or sharp edges).
2. Power-off the computer. Disconnect the power cord.
3. Check the power cord for:
   a. A third-wire ground connector in good condition. Use a meter to measure third-wire ground continuity for 0.1 ohm or less between the external ground pin and frame ground.
   b. The power cord should be the appropriate type as specified in the parts listings.
   c. Insulation must not be frayed or worn.
4. Remove the cover.
5. Check for any obvious alterations. Use good judgment as to the safety of any alterations.
6. Check inside the unit for any obvious unsafe conditions, such as metal filings, contamination, water or other liquids, or signs of fire or smoke damage.
7. Check for worn, frayed, or pinched cables.
8. Check that the power-supply cover fasteners (screws or rivets) have not been removed or tampered with.

Handling electrostatic discharge-sensitive devices

Any computer part containing transistors or integrated circuits (ICs) should be considered sensitive to electrostatic discharge (ESD). ESD damage can occur when there is a difference in charge between objects. Protect against ESD damage by equalizing the charge so that the machine, the part, the work mat, and the person handling the part are all at the same charge.

Notes:

1. Use product-specific ESD procedures when they exceed the requirements noted here.
2. Make sure that the ESD protective devices you use have been certified (ISO 9000) as fully effective.

When handling ESD-sensitive parts:

- Keep the parts in protective packages until they are inserted into the product.

- Avoid contact with other people while handling the part.
- Wear a grounded wrist strap against your skin to eliminate static on your body.
- Prevent the part from touching your clothing. Most clothing is insulative and retains a charge even when you are wearing a wrist strap.
- Use the black side of a grounded work mat to provide a static-free work surface. The mat is especially useful when handling ESD-sensitive devices.
- Select a grounding system, such as those listed below, to provide protection that meets the specific service requirement.

  Note: The use of a grounding system is desirable but not required to protect against ESD damage.

  – Attach the ESD ground clip to any frame ground, ground braid, or green-wire ground.
  – Use an ESD common ground or reference point when working on a double-insulated or battery-operated system. You can use coax or connector-outside shells on these systems.
  – Use the round ground-prong of the ac plug on ac-operated computers.

Grounding requirements

Electrical grounding of the computer is required for operator safety and correct system function. Proper grounding of the electrical outlet can be verified by a certified electrician.

Safety notices

The caution and danger safety notices in this section are provided in the the language of English.



DANGER

Electrical current from power, telephone and communication cables is hazardous.

To avoid a shock hazard:

- **Do not connect or disconnect any cables or perform installation, maintenance, or reconfiguration of this product during an electrical storm.**
- **Connect all power cords to a properly wired and grounded electrical outlet.**
- **Connect to properly wired outlets any equipment that will be attached to this product.**
- **When possible, use one hand only to connect or disconnect signal cables.**
- **Never turn on any equipment when there is evidence of fire, water, or structural damage.**
- **Disconnect the attached power cords, telecommunications systems, networks, and modems before you open the device covers, unless instructed otherwise in the installation and configuration procedures.**
- **Connect and disconnect cables as described in the following table when installing, moving, or opening covers on this product or attached devices.**

To Connect	To Disconnect
1. Turn everything OFF. 2. First, attach all cables to devices. 3. Attach signal cables to connectors. 4. Attach power cords to outlet. 5. Turn device ON.	1. Turn everything OFF. 2. First, remove power cords from outlet. 3. Remove signal cables from connectors. 4. Remove all cables from devices.



CAUTION:
When replacing the lithium battery, use only Part Number 45C1566 or an equivalent type battery recommended by the manufacturer. If your system has a module containing a lithium battery, replace it only with the same module type made by the same manufacturer. The battery contains lithium and can explode if not properly used, handled, or disposed of.
Do not:

- **Throw or immerse into water**
- **Heat to more than 100°C (212°F)**
- **Repair or disassemble**

Dispose of the battery as required by local ordinances or regulations.



CAUTION:
When laser products (such as CD-ROMs, DVD-ROM drives, fiber optic devices, or transmitters) are installed, note the following:

- **Do not remove the covers. Removing the covers of the laser product could result in exposure to hazardous laser radiation. There are no serviceable parts inside the device.**
- **Use of controls or adjustments or performance of procedures other than those specified herein might result in hazardous radiation exposure.**



**DANGER**

Some laser products contain an embedded Class 3A or Class 3B laser diode. Note the following:

Laser radiation when open. Do not stare into the beam, do not view directly with optical instruments, and avoid direct exposure to the beam.



		
≥18 kg(37 lbs)	≥32 kg(70.5 lbs)	≥55 kg(121.2 lbs)

CAUTION:
Use safe practices when lifting.



CAUTION:
The power control button on the device and the power switch on the power supply do not turn off the electrical current supplied to the device. The device also might have more than one power cord. To remove all electrical current from the device, ensure that all power cords are disconnected from the power source.



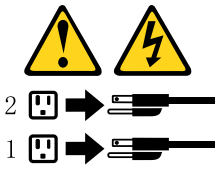



CAUTION:
Do not place any object weighing more than 82 kg (180 lbs.) on top of rack-mounted devices.



Chapter 3. General information

This chapter provides general information that applies to all machine types supported by this publication.

Specifications

This section lists the physical specifications for your computer.

This section lists the physical specifications for your computer.

Type ideacentre 310s

This section lists the physical specifications.

Environment

Air temperature:

- Operating: 10° to 35°C
- Transit: -20° to 55°C

Humidity:

- Operating: 35% to 80%
- Transit: 20% to 90% (40°C)
- Altitude: 86KPa to 106KPa

Electrical input:

- Input voltage: 90V-264V(AC)
- Input frequency: 47Hz-63Hz

© Copyright Lenovo 2016

Chapter 4. General Checkout

Attention: The drives in the computer you are servicing might have been rearranged or the drive startup sequence changed. Be extremely careful during write operations such as copying, saving, or formatting. Data or programs can be overwritten if you select an incorrect drive.

General error messages appear if a problem or conflict is found by an application program, the operating system, or both. For an explanation of these messages, refer to the information supplied with that software package.

Use the following procedure to help determine the cause of the problem:

1. Power-off the computer and all external devices.
2. Check all cables and power cords.
3. Set all display controls to the middle position.
4. Power-on all external devices.
5. Power-on the computer.
   - Look for displayed error codes
   - Look for readable instructions or a main menu on the display.

     If you did not receive the correct response, proceed to step 6.

     If you do receive the correct response, proceed to step 7.
6. Look at the following conditions and follow the instructions:
   - If the computer displays a POST error, go to “POST error codes”.
   - If the computer hangs and no error is displayed, continue at step 7.
7. If the test stops and you cannot continue, replace the last device tested.

© Copyright Lenovo 2016

Chapter 5. Using the Setup Utility

The Setup Utility program is used to view and change the configuration settings of your computer, regardless of which operating system you are using. However, the operating-system settings might override any similar settings in the Setup Utility program.

Starting the Lenovo BIOS Setup Utility program

To start the Lenovo BIOS Setup Utility program, do the following:

1. If your computer is already on when you start this procedure, shut down the operating system and turn off the computer.
2. Press and hold the **F1** key then turn on the computer. When the Lenovo BIOS Setup Utility program is displayed, release the **F1** key.

Note: If a Power-On Password or an Administrator Password has been set, the Setup Utility program menu is not displayed until you type your password. For more information, see “Using passwords.”

Viewing and changing settings

System configuration options are listed in the Lenovo BIOS Setup Utility program menu. To view or change settings, see “Starting the Setup Utility program.”

You must use the keyboard when using the Lenovo BIOS Setup Utility menu. The keys used to perform various tasks are displayed on the bottom of each screen.

Using passwords

You can use the Lenovo BIOS Setup Utility program to set passwords to prevent unauthorized persons from gaining access to your computer and data. See “Starting the Setup Utility program.” The following types of passwords are available:

- Set Administrator Password
- Set Power-On Password

You do not have to set any passwords to use your computer. However, if you decide to set passwords, read the following sections.

Password considerations

A password can be any combination of letters and numbers up to 16 character (a-z, and 0-9). For security reasons, it is a good idea to use a strong password that cannot be easily compromised. We suggest that passwords should follow these rules:

- Strong passwords contain 7-16 characters, combine letters and numbers.
- Do not use your name or your user name.
- Do not use a common word or a common name.
- Be significantly different from your previous password.

Attention: Administrator and Power-On passwords are not case sensitive

© Copyright Lenovo 2016

Administrator Password

Setting an Administrator Password deters unauthorized persons from changing configuration settings. You might want to set an Administrator Password if you are responsible for maintaining the settings of several computers.

After you set an Administrator Password, a password prompt is displayed every time you access the Lenovo BIOS Setup Utility program.

If both the Administrator and Power-On Password are set, you can type either password. However, you must use your Administrator Password to change any configuration settings.

Setting, changing, or deleting an Administrator password

To set an Administrator Password, do the following:

Note: A password can be any combination of letters and numbers up to 16 character (a-z, and 0-9). For more information, see “Password considerations” on page 13.

1. Start the Lenovo BIOS Setup Utility program (see “Starting the Lenovo BIOS Setup Utility program” on page 13).
2. From the **Security** menu, select **Set Administrator Password** and press the **Enter** key.
3. The password dialog box will be displayed. Type the password then press the **Enter** key.
4. Re-type the password to confirm, then press the **Enter** key. If you type the password correctly, the password will be installed.

To change an Administrator Password, do the following:

1. Start the Lenovo BIOS Setup Utility program (see “Starting the Lenovo BIOS Setup Utility program” on page 13).
2. From the **Security** menu, select **Set Administrator Password** and press the **Enter** key.
3. The password dialog box will be displayed. Type the current password then press **Enter** key.
4. Type the new password, then press **Enter** key. Re-type the password to confirm the new password, if you type the new password correctly, the new password will be installed. A Setup Notice will display that changes have been saved.

To delete a previously set Administrator Password, do the following :

1. From the **Security** menu, select **Set Administrator Password** and press the **Enter** key.
2. The password dialog box will be displayed. Type the current password and press the **Enter** key.
3. To delete an **Administrator Password**, **Enter** blank fields for each new password line item. A setup notice will display that changes have been saved.
4. Return to the Lenovo BIOS Setup Utility program menu and select the **Exit** option.
5. Select **Save changes and Exit** from the menu.

Power-On Password

When a Power-On Password is set, you cannot start the Lenovo BIOS Setup Utility program until a valid password is typed from the keyboard.

Setting, changing, or deleting a Power-On Password

Note: A password can be any combination of letters and numbers up to 16 character (a-z, and 0-9).

To set a Power-On Password, do the following:

1. Start the Lenovo BIOS Setup Utility program (See ”Starting the Lenovo BIOS Setup Utility program” on page 13.)
2. From the **Security** menu, select **Set Power-On Password** and press the **Enter** key.
3. The password dialog box will be displayed. Type the password, and press the **Enter** key.
4. Re-type the password to confirm, if you type the password correctly, the password will be installed.

To change a Power-On Password, do the following:

1. Start the Lenovo BIOS Setup Utility program (See ”Starting the Lenovo BIOS Setup Utility program” on page 13.)
2. From the **Security** menu, select **Set Power-On Password** and press the **Enter** key.
3. The password dialog box will be displayed. Type the current password then press the **Enter** key.
4. Type the new password, then press the **Enter** key. Re-type the password to confirm the new password, if you type the new password correctly, the new password will be installed. A setup notice will display that changes have been saved.

To delete a previously set Power-On Password, do the following :

1. From the **Security** menu, select **Set Power-On Password** and press the **Enter** key.
2. The password dialog box will be displayed. Type the current password and press the **Enter** key.
3. To delete the **Power-On Password**, **Enter** blank fields for each new password line item. A setup notice will display that changes have been saved.
4. Return to the Lenovo BIOS Setup Utility program menu and select the **Exit** option.
5. Select **Save changes and Exit** from the menu.

Enabling or disabling a device

The **Devices** options is used to enable or disable user access to the following devices:	
USB Functions	Select whether to enable or disable **USB** (Universal Serial Bus) functions. If the functions are disabled, no **USB** devices can be used.
ATA Drive Setup	Select IDE or ACHI mode. Device driver support is required for ACHI mode. Depending on how the hard disk image was installed, changing this setting may prevent the system from booting.
Onboard Audio Controller	Select whether to enable or disable the **Onboard Audio Controller**, when feature is set to Disabled all devices connected to the audio connectors (e.g. a headphone or a microphone) are disabled and can’t be used.
Onboard Ethernet Controller or Boot Agent	Select whether to enable or disable **Onboard Ethernet Controller**, or select whether to enable or disable load onboard **PXE** (**Preboot Execution Environment**), or **SMC** (**Secure Managed Client**). This feature will allow the computer to boot from a server image.

To enable or disable a device, do the following:

1. Start the Setup Utility program (see “Starting the Setup Utility program” on page 13).
2. From the Setup Utility program menu, select **Devices**.
3. Select:

USB Setup press the **Enter** key, and then select **USB Functions**.

ATA Device Setup press the **Enter** key. Select **Configure SATA as**, press the **Enter** key and then select SATA mode.

Audio Setup press the **Enter** key, and then select **Onboard Audio Controller**.

Network Setup press the **Enter** key, then select **Onboard Ethernet Support** or **Boot Agent**.

4. Select **Disabled** or **Enabled** and press the **Enter** key.
5. Return to the Lenovo BIOS Setup Utility program menu and select the **Exit** option.
6. Select **Save changes and Exit** from the menu.

   Note: If you do not want to save the settings, select **Discard changes and Exit** from the menu.

Selecting a startup device

If your computer does not boot from a device such as the CD/DVD-ROM drive disk or hard disk as expected, follow one of the procedures below.

Selecting a temporary startup device

Use this procedure to startup from any boot device.

Note: Not all CDs, DVDs or hard disk drives are bootable.

1. Turn off your computer.
2. Press and hold the **F12** key then turn on the computer. When the **Startup Device Menu** appears, release the **F12** key.

   Note: If the **Startup Device Menu** does not display using these steps, repeatedly press and release the **F12** key rather than keeping it pressed when turning on the computer.
3. Use ↑ and ↓ arrows to select the desired startup device from the **Startup Device Menu** and press the **Enter** key to begin.

   Note: Selecting a startup device from the **Startup Device Menu** does not permanently change the startup sequence.

Selecting or changing the startup device sequence

To view or permanently change the configured startup device sequence, do the following:

1. Start the Lenovo BIOS Setup Utility program (see “Starting the Lenovo BIOS Setup Utility program” on page 13).
2. From the Lenovo BIOS Setup Utility program main menu, select the **Startup** option.
3. Press the **Enter** key, and select the devices for the **Primary Boot Sequence**. Read the information displayed on the right side of the screen.
4. Use - and ¯ arrows to select a device. Use the **<+>** or **<->** keys to move a device up or down. Use the **<x>** key to exclude the device from or include the device in the boot sequence.
5. Return to the Lenovo BIOS Setup Utility program menu and select the **Exit** option.
6. Select **Save changes and Exit** from the menu.

   Notes:

   a. If you do not want to save the settings, select **Discard changes and Exit** from the menu.

b. If you have changed these settings and want to return to the default settings, select **Load Optimal Defaults** from the menu.

Exiting the Lenovo BIOS Setup Utility program

After you finish viewing or changing settings, press the **Esc** key to return to the Lenovo BIOS Setup Utility program main menu. You might have to press the **Esc** key several times. Do one of the following:

- If you want to save the new settings, select **Save changes and Exit** from the menu. When the **Save & reset** window shows, select the **Yes** button, and then press the **Enter** key to exit the Lenovo BIOS Setup Utility program.
- If you do not want to save the settings, select **Discard changes and Exit** from the menu. When the **Reset Without Saving** window shows, select the **Yes** button, and then press the **Enter** key to exit the Setup Utility program.

Chapter 6. Symptom-to-FRU Index

The Symptom-to-FRU index lists error symptoms and possible causes. The most likely cause is listed first. Always begin with Chapter 4, “General Checkout,” on page 11. This index can also be used to help you decide which FRUs to have available when servicing a computer. If you are unable to correct the problem using this index, go to “Undetermined problems” on page 20.

Notes:

- If you have both an error message and an incorrect audio response, diagnose the error message first.
- If you cannot run the diagnostic tests or you get a diagnostic error code when running a test but did receive a POST error message, diagnose the POST error message first.
- If you did not receive any error message look for a description of your error symptoms in the first part of this index.

Hard disk drive boot error

A hard disk drive boot error can have the following causes.

Error	FRU/Action
The startup drive is not included in the boot sequence in configuration.	Check the configuration and ensure the startup drive is in the boot sequence.
No operating system installed on the boot drive.	Install an operating system on the boot drive.
The boot sector on the startup drive is corrupted.	The drive must be formatted. Do the following: 1. Attempt to back-up the data on the failing hard disk drive. 2. Use the operating system to format the hard disk drive.
The drive is defective.	Replace the hard disk drive.

Power Supply Problems

Follow these procedures if you suspect there is a power supply problem.

Check/Verify	FRU/Action
Check that the following are properly installed: • Power Cord • On/Off Switch connector • System Board Power Supply connectors • Microprocessor(s) connection	Reseat connectors
Check the power cord.	Power Cord
Check the power-on switch.	Power-on Switch

Additional Service Information

This chapter provides additional information that the service representative might find helpful.

© Copyright Lenovo 2016

Power management

Power management reduces the power consumption of certain components of the computer such as the system power supply, processor, hard disk drives, and some monitors.

Advanced configuration and power interface (ACPI) BIOS

As this computer has an ACPI BIOS system, the operating system is allowed to control the power management features of the computer and the settings for Advanced Power Management (APM) BIOS mode is ignored. Not all operating systems support ACPI BIOS mode.

Automatic Power-On features

The Automatic Power-On features within the Power Management menu allow you to enable and disable features that turn on the computer automatically.

- Wake Up on Alarm: You can specify a date and time at which the computer will be turned on automatically. This can be either a single event , a daily event or a weekly event.
- Wake Up on LAN: This feature allows LAN adapter card to wake the System.

POST error codes

Each time you turn the computer on, it performs a series of tests to check that the system is operating correctly and that certain options are set. This series of tests is called the *Power-On Self-Test*, or *POST*. POST does the following:

- Checks some basic system-board operations
- Checks that the memory is working correctly
- Starts video operations
- Verifies that the boot drive is working

POST Error Message	Description/Action
Keyboard error	Cannot initialize the keyboard. Make sure the keyboard is properly connected to the computer and that no keys are held pressed during POST. To purposely configure the computer without a keyboard, select **Keyboardless operation** in **Startup** option to **Enabled**. The BIOS then ignores the missing keyboard during POST.
Reboot and Select proper Boot device or Insert Boot Media in selected Boot device	The BIOS was unable to find a suitable boot device. Make sure the boot drive is properly connected to the computer. Make sure you have bootable media in the boot device.

Undetermined problems

1. Power-off the computer.
2. Remove or disconnect the following components (if connected or installed) one at a time.
   a. External devices (modem, printer, or mouse)
   b. Extended video memory
   c. External Cache
   d. External Cache RAM
   e. Hard disk drive
   f. Disk drive

3. Power-on the computer to re-test the system.
4. Repeat steps 1 through 3 until you find the failing device or component.

If all devices and components have been removed and the problem continues, replace the system board.

Chapter 7. Locations

This section provides illustrations to help locate the various connectors, controls and components of the computer.

Identifying internal components

The following illustration shows the components inside your computer.

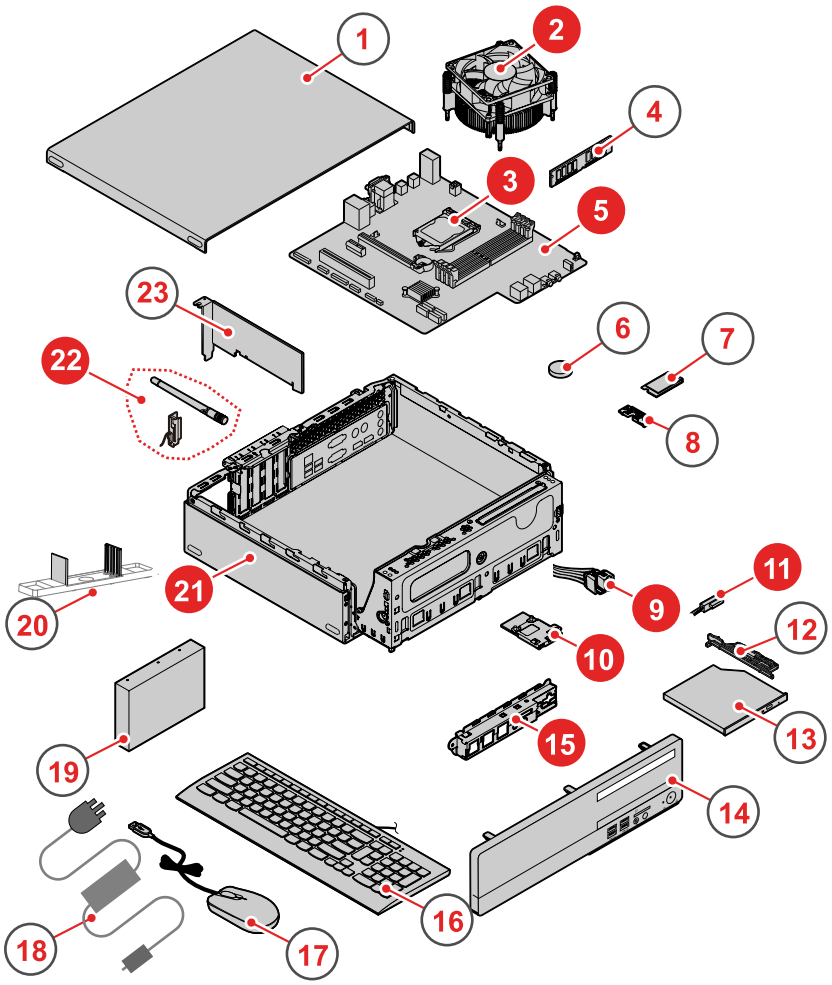

No.	Description	Self-service CRU	Optional-service CRU
1	Side cover	Yes	No
2	Heat-sink module	No	No
3	Memory module	Yes	No
4	CPU	NO	No
5	Motherboard	No	Yes
6	Coin-cell battery	No	Yes
7	Wi-Fi card	No	Yes

© Copyright Lenovo 2016

8	Wi-Fi card bracket	No	No
9	Power button	No	No
10	Card reader	No	No
11	Hard disk drive/Optical drive cable	No	Yes
12	Optical drive bracket	Yes	No
13	Optical drive	Yes	No
14	Front cover	Yes	No
15	Front I/O bracket	No	No
16	Keyboard	Yes	No
17	Mouse	Yes	No
18	Adapter	Yes	No
19	Hard disk drive	Yes	No
20	Computer bracket	Yes	No
21	Chassis	No	No
22	Wi-Fi antenna	No	Yes
23	Graphic card	Yes	No

Identifying parts on the motherboard

The motherboard (sometimes called the planar or system board) is the main circuit board in your computer. It provides basic computing functions and supports a variety of devices that are factory-installed or that you can install later. The following illustration shows the location of connectors and components on the front of the motherboard.

Table 1. 310s–08ASR

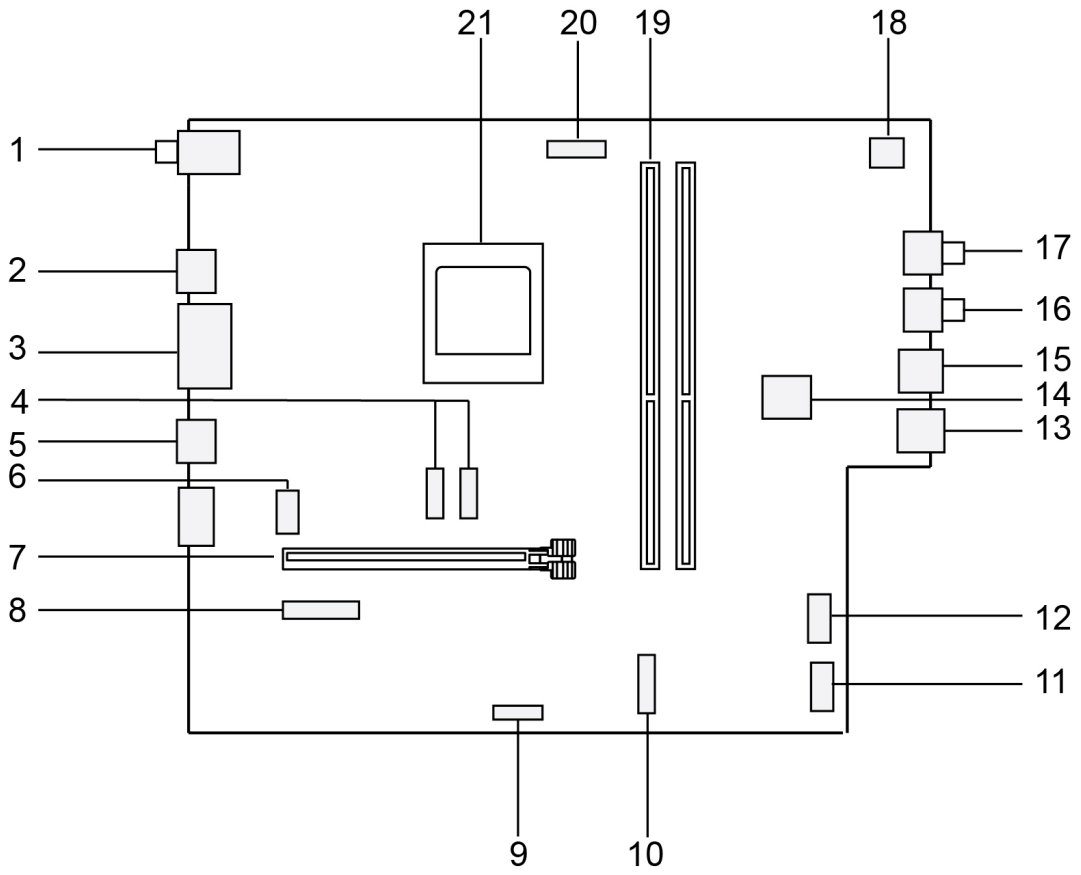

1. Audio connectors	12. Front panel connector
2. HDMI-out connector	13. USB 2.0 connectors (2)
3. VGA-out connector	14. Storage drive power connector
4. SATA connectors (2)	15. USB 3.0 connectors (2)
5. USB 2.0 and Ethernet connectors	16. Headphone connector
6. System fan connector	17. Microphone connector
7. PCI express X 16 adapter slot	18. Power button board connector
8. PCI express X 1 adapter slot	19. Memory slots (2)
9. Front USB connector	20. Microprocessor fan connector
10. M.2 Wi-Fi card slot	21. Microprocessor socket
11. Auxiliary power connector	

Table 2. 310s–08IAP

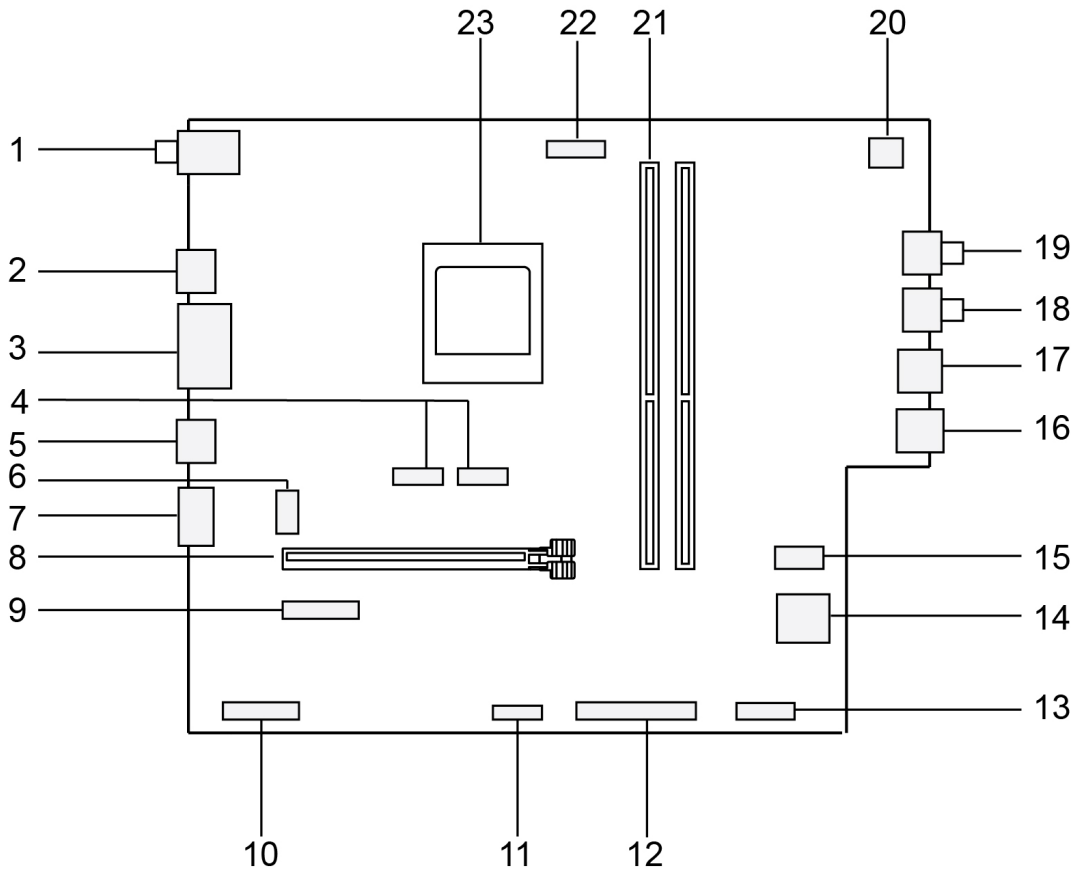

1. Audio connectors	13. Front panel connector
2. HDMI-out connector	14. SATA power connector
3. VGA-out connector	15. Auxiliary fan connector
4. SATA connectors (2)	16. USB 2.0 connectors (2)
5. USB 2.0 and Ethernet connectors	17. USB 3.0 connectors (2)
6. System fan connector	18. Headphone connector
7. Power connector	19. Microphone connector
8. PCI express X 16 adapter slot	20. Power button board connector
9. PCI express X 1 adapter slot	21. Memory slots (2)
10. Serial connector	22. Microprocessor fan connector
11. Front USB connector	23. Microprocessor socket
12. Parallel connector	

Chapter 8. Replacing hardware

Attention: Do not remove the computer cover or attempt any repair before reading the “Important safety information” in the *Safety and Warranty Guide* that was included with your computer. To obtain copies of the Safety and Warranty Guide, go to the Support Web site at:
http://consumersupport.lenovo.com

General information

Pre-disassembly instructions

Before proceeding with the disassembly procedure, make sure that you do the following:

1. Turn off the power to the system and all peripherals.
2. Unplug all power and signal cables from the computer.
3. Place the system on a flat, stable surface.

General information

Pre-disassembly instructions

Before proceeding with the disassembly procedure, make sure that you do the following:

1. Turn off the power to the system and all peripherals.
2. Unplug all power and signal cables from the computer.
3. Place the system on a flat, stable surface.

© Copyright Lenovo 2016

Replacing the keyboard and mouse

Note: Your keyboard will be connected to a USB connector at either front or at the rear of the computer.

To replace the keyboard:

Step 1. Remove any media (disks, CDs, or memory cards) from the drives, shut down the computer, and turn off all attached devices.

Step 2. Unplug all power cords from electrical outlets.

Step 3. Locate the connector for the keyboard. Refer to “Front view of the chassis” and “Rear view of the chassis”.

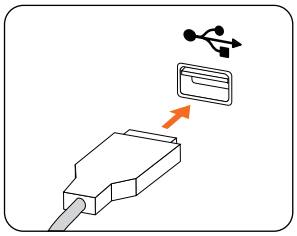

Step 4. Disconnect the defective keyboard cable from the computer and connect the new keyboard cable to the same connector.

Step 5. The mouse can be replaced using the same method.

Replacing the adapter

To replace the adapter:

Step 1. Disconnect the power cable from the connector on the computer. a

Step 2. Disconnect the adapter from the power source. b

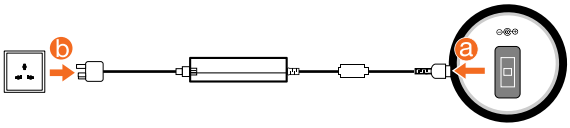

Step 3. Install the new adapter :

a. Connect the adapter to the computer.

b. Connect the adapter to a power source.

Removing the computer cover

Attention:

- Turn off the computer and wait 3 to 5 minutes to let it cool down before removing the cover.
- For this procedure, it helps to lay the computer on a flat, stable surface.

To remove the computer cover:

Step 1. Remove any media (disks, CDs, or memory cards) from the drives, shut down the computer, and turn off all attached devices.

Step 2. Unplug all power cords from electrical outlets.

Step 3. Disconnect all cables attached to the computer. This includes power cords, input/output (I/O) cables, and any other cables that are connected to the computer. Refer to “Locating connectors on the rear of the computer”.

Step 4. Remove the two screws that secures the cover, slide the computer cover outward as shown.

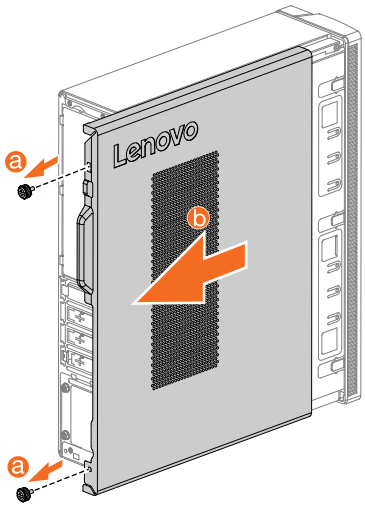

Step 5. Reinstall the computer cover:

a. Align the cover with the guide track on the computer case, then slide the cover in.

b. Secure the computer cover with the two screws.

Removing the front bezel

Note: For this procedure, it helps to lay the computer flat.

To remove the front bezel:

Step 1. Remove the computer cover. Refer to “Removing the computer cover”.

Step 2. Remove the front bezel by releasing the three plastic tabs as shown. 2

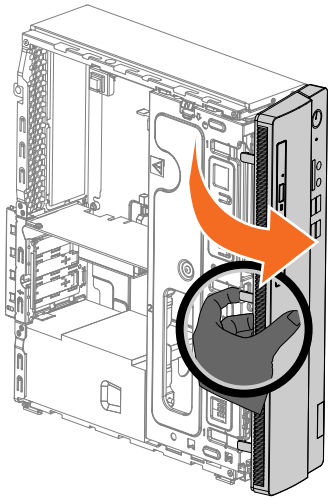

Step 3. To reattach the bezel, align the plastic tabs with the corresponding holes in the chassis, and then snap it into position.

Step 4. Reattach the computer cover.

Replacing a hard disk drive

Note: For this procedure, it helps to lay the computer flat.

To replace a hard disk drive:

Step 1. Remove the computer cover. Refer to “Removing the computer cover”.

Step 2. Remove the front bezel. Refer to “Removing the front bezel”.

Step 3. Open the drive bay as show. **a**

Step 4. Remove the four screws that secure the hard disk drive to the drive bay. **b**

Step 5. Disconnect the data and power cables from the hard disk drive. **c**

Step 6. Slide the hard disk drive out of the drive bay. **d**

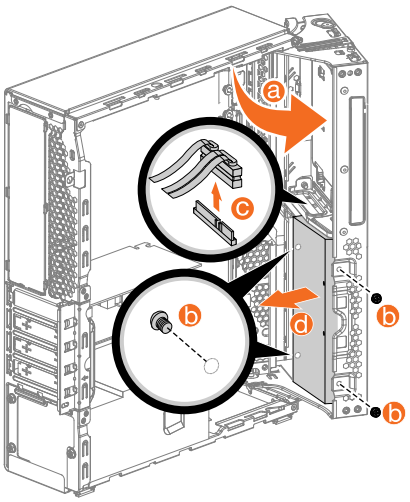

Step 7. Line up the new hard disk drive with the mounting holes in the drive bay and secure the new hard disk drive with the four screws.

Step 8. Connect the power and signal cables to the new hard disk drive.

Step 9. Slide the drive bay back to close it.

Step 10. Reattach the front bezel and the computer cover.

Replacing an optical drive

Note: For this procedure, it helps to lay the computer flat,stable surface.

To replace an optical drive:

Step 1. Remove the computer cover. Refer to “Removing the computer cover”.

Step 2. Remove the front bezel. Refer to “Removing the front bezel”.

Step 3. Disconnect the data and power cables from the rear of the optical drive. a

Step 4. Press the release button and push the optical drive straight out of the front of the chassis. b

Step 5. Detach the bracket from the optical drive as shown. c

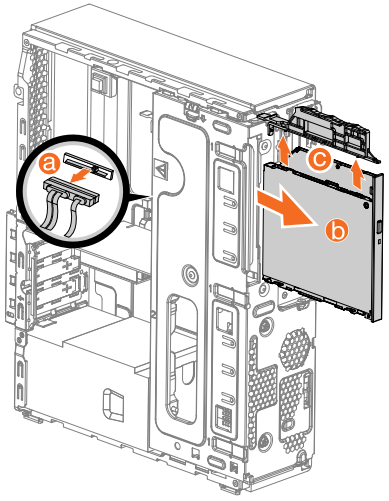

Step 6. Attach the new optical drive to the bracket.

Step 7. Slide the new optical drive into the bay from the front until it snaps into position.

Step 8. Connect the data and power cables to the new disk drive.

Step 9. Reattach the front bezel and computer cover.

Replacing a graphics card

Note: For this procedure, it helps to lay the computer on a flat, stable surface.

To replace a graphics card:

Step 1. Remove the computer cover. Refer to “Removing the computer cover”.

Step 2. Remove the front bezel. Refer to “Removing the front bezel”.

Step 3. Open the drive bay as shown. a

Step 4. Open the metal tab that secure the graphic card to the chassis. b

Step 5. Push the locking pin on the motherboard to release the graphic card. c

Step 6. Lift the graphic card straight up to remove it.

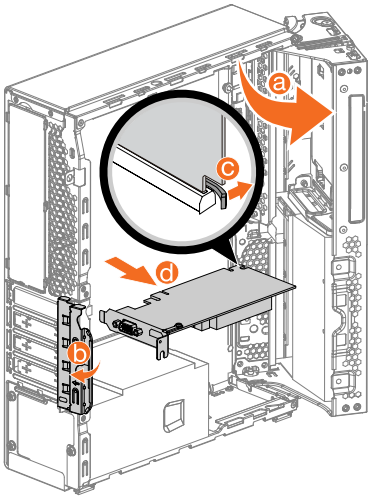

Step 7. To install the new graphics card:

a. Attach the new graphics card to the same adapter connector.

b. Close the latches and the drive bay.

Step 8. Reattach the front bezel and computer cover.

Replacing a memory module

Note: For this procedure, it helps to lay the computer flat.

To replace a memory module:

Step 1. Remove the computer cover. Refer to “Removing the computer cover”.

Step 2. Remove the front bezel. Refer to “Removing the front bezel”.

Step 3. Remove the memory module to be replaced by opening the retaining clips as shown. a b

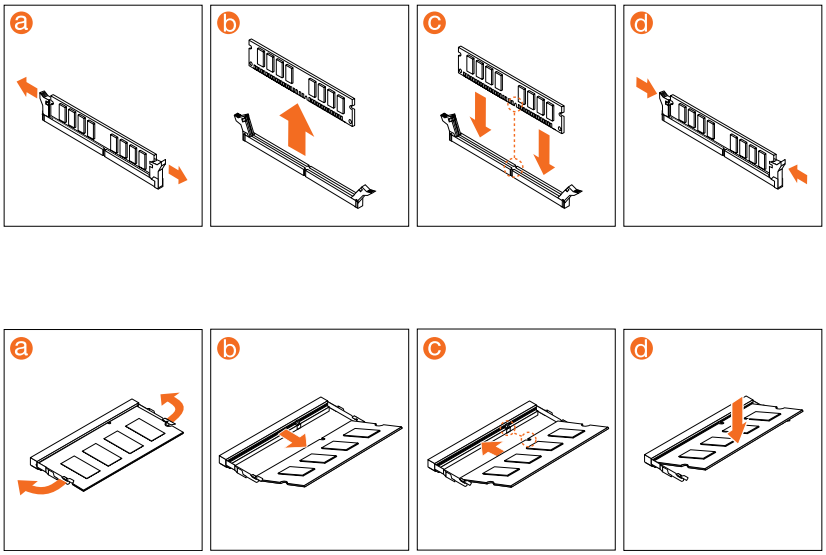

Step 4. Position the new memory module over the memory connector. Make sure that the notch c on the memory module aligns correctly with the connector key d on the system board. Push the memory module straight down into the connector until the retaining clips close.

Step 5. Reattach the front bezel and computer cover.

Replacing the heat-sink assembly

To replace the heat-sink assembly:

Step 1. Remove any media (disks, CDs, DVDs, or memory cards) from the drives, shut down the operating system, and turn off the computer and all attached devices.

Step 2. Unplug all power cords from electrical outlets.

Step 3. Disconnect all cables attached to the computer. This includes power cords, input/output (I/O) cables, and any other cables that are connected to the computer. Refer to “Left and right view” and “Rear view” for help with locating the various connectors.

Step 4. Remove the computer cover. Refer to “Removing the computer cover”.

Step 5. Remove the front bezel. Refer to “Removing the front bezel”.

Step 6. Disconnect the fan power cable from the connector on the motherboard.

Step 7. Remove the 4 screws that secure the heat-sink to the motherboard and lift up the heat-sink to remove it.

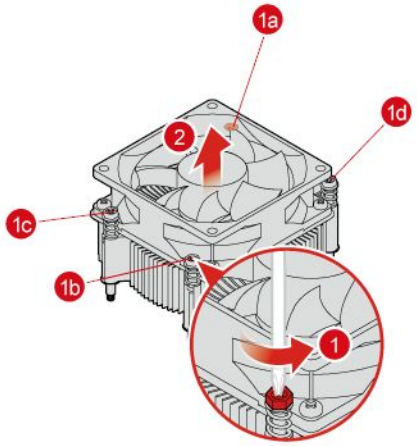

Step 8. To install the new heat-sink assembly:

a. Line up the new heat-sink assembly with the mounting holes on the motherboard, secure the new heat-sink assembly with 4 screws.

b. Connect the fan power cable to the connector on the board.

Step 9. Reattach the front bezel and computer cover.

Replacing the Wi-Fi card

Note: For this procedure, it helps to lay the computer flat.

To replace the Wi-Fi card:

Step 1. Remove any media (disks, CDs, DVDs, or memory cards) from the drives, shut down the operating system, and turn off the computer and all attached devices.

Step 2. Unplug all power cords from electrical outlets.

Step 3. Disconnect all cables attached to the computer. This includes power cords, input/output (I/O) cables, and any other cables that are connected to the computer. Refer to “Left and right view” and “Rear view” for help with locating the various connectors.

Step 4. Remove the computer cover. Refer to “Removing the computer cover”.

Step 5. Remove the front bezel. Refer to “Removing the front bezel”.

Step 6. Disconnect the 2 antenna cables from the Wi-Fi card.

Step 7. Remove the screw that secures the Wi-Fi card to the motherboard. 1

Step 8. Remove the card bracket and pull the Wi-Fi card upward to remove it from the card port. 2

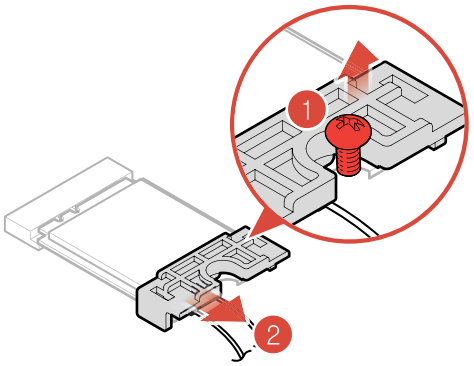

Step 9. Install the new Wi-Fi card:

a. Line up the new Wi-Fi card, then insert it into the same card port.

b. Attach the card bracket to the new Wi-Fi card.

c. Secure the Wi-Fi card to the motherboard with the screw.

d. Connect the 2 antenna cables to the new Wi-Fi card.

Step 10. Reattach the front bezel and the computer cover.

Replacing the motherboard

Note: For this procedure, it helps to lay the computer flat.

To replace the motherboard:

Step 1. Remove any media (disks, CDs, DVDs, or memory cards) from the drives, shut down the operating system, and turn off the computer and all attached devices.

Step 2. Unplug all power cords from electrical outlets.

Step 3. Disconnect all cables attached to the computer. This includes power cords, input/output (I/O) cables, and any other cables that are connected to the computer. Refer to “Left and right view” and “Rear view” for help with locating the various connectors.

Step 4. Remove the computer cover. Refer to “Removing the computer cover”.

Step 5. Remove the front bezel. Refer to “Removing the front bezel”.

Step 6. Remove the memory module. Refer to “Replacing a memory module”.

Step 7. Remove the heat-sink assembly. Refer to “Replacing the heat-sink assembly”.

Step 8. Remove the graphic card. Refer to “Replacing the graphic card”.

Step 9. Remove the Wi-Fi card. Refer to “Replacing the Wi-Fi card”.

Step 10. Disconnect the all cables from the connectors on motherboard.

Step 11. Remove the seven screws that secure the motherboard to the chassis.

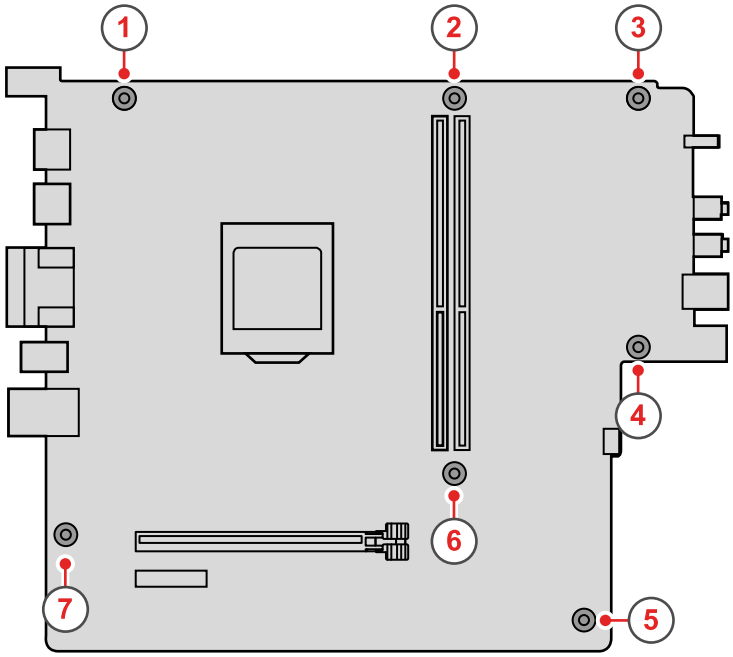

Step 12. Slide then lift the motherboard out of the chassis to remove it.

Step 13. Install the new motherboard:

a. Line up the holes on the new motherboard with mounting holes on the chassis and secure it with screws.

b. Reattach the memory module, Wi-Fi card and the heat-sink assembly to the new motherboard.

c. Connect the all cables to the new motherboard.

d. Attach the graphic card to the new motherboard.

Step 14. Reattach the front bezel and the computer cover.

Replacing the front I/O bracket, power button and the card reader

Note: For this procedure, it helps to lay the computer flat.

To replace the the front I/O bracket, power button or the card reader.

Step 1. Remove any media (disks, CDs, DVDs, or memory cards) from the drives, shut down the operating system, and turn off the computer and all attached devices.

Step 2. Unplug all power cords from electrical outlets.

Step 3. Disconnect all cables attached to the computer. This includes power cords, input/output (I/O) cables, and any other cables that are connected to the computer. Refer to “Left and right view” and “Rear view” for help with locating the various connectors.

Step 4. Remove the computer cover. Refer to “Removing the computer cover”.

Step 5. Remove the front bezel. Refer to “Removing the front bezel”.

Step 6. Follow the below illustration to replace the front I/O bracket, power button or card reader.

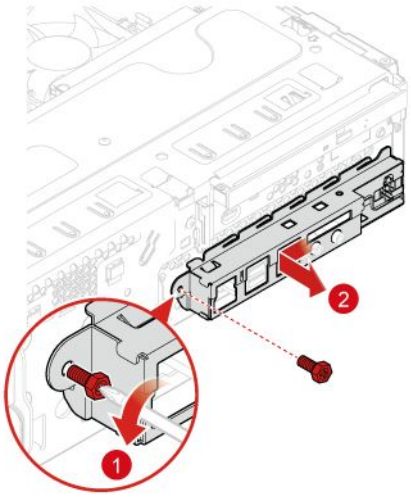
2
1

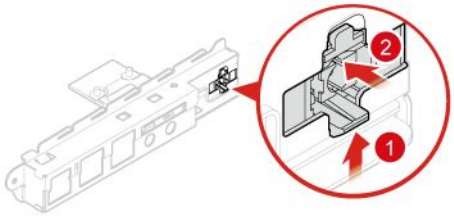
2
1

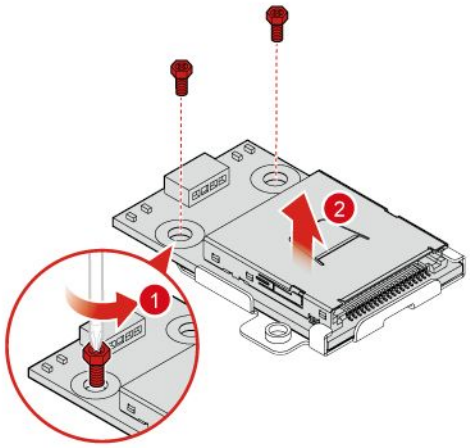

Step 7. Install the new front I/O bracket, power button or card reader follow the below illustrations:

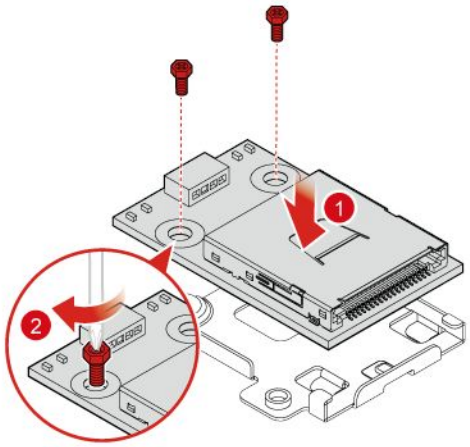

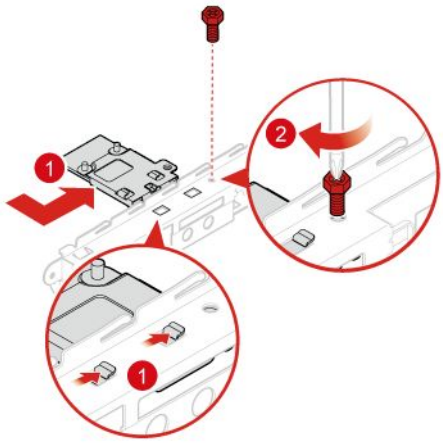
1
2
1

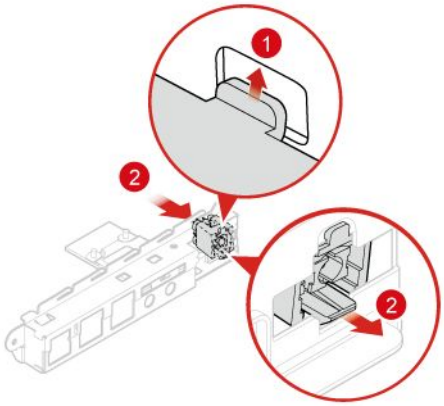
1
2
2

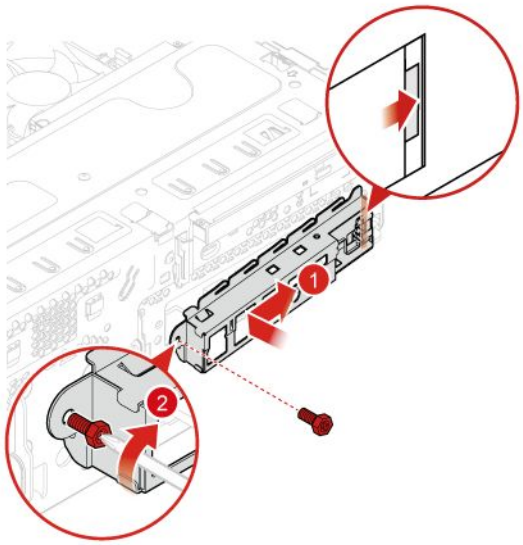

Step 8. Reattach the front bezel and the computer cover.

Ideacentre 310S-08IAP FRU list

This chapter lists the information on the field replaceable units (FRUs).

Attention: Be sure to read and understand all the safety information before replacing any FRUs.

Ideacentre 310S-08IAP service parts listing	
MT: 90GA	
FRU P/N	Description
AC_ADAPTER	
00PC726	AC_ADAPTER,90W,100-240Vac,3P
54Y8999	AC_ADAPTER,65W,100-240Vac,3P
ANTENNA	
00XJ098	Fru, Lx 8L SMB and IDC Front ANT
BDPLANAR	
00XK222	MB N Apollolake J4205 YT NO DPK
00XK225	MB N Apollolake J3455 YT WIN DP
00XK223	MB N Apollolake J4205 YT WIN DP
00XK224	MB N Apollolake J3455 YT NO DPK
00XK226	MB N Apollolake J3355 YT NO DPK
00XK227	MB N Apollolake J3355 YT WIN DP
BRACKET	
01EF802	AVC,card reader bracket

01EF238	PCIe bracket for WIFI
01EF799	334AT,Slim ODD latch,AVC
CABLE	
00XL187	Fru310mmSATA cable 1 latch S_angle
5C10H56135	LS 300mm SATA cable 2 latch
00XL220	Fru 200mm SATA power cable
00XL186	Fru280mm LED cable :1SW_LED
03T7203	Dual-band dipole antenna 5GHZ
04X2735	Fru, 210mm SMA RF Cable_Tiny3
00XL219	Fru3.5 HDD+ODD Power Cable
00XL214	Fru,SATA PWRcable(250mm+60mm)
CARDPOP	
00PC206	NV GeForce GT730 2G VGA+HDMI LP
CARDREADER	
01AJ839	7 in 1 Card reader
DT_KYB	
01AH633	Liteon 2.4G Black SK-8861 RU
01AH637	Liteon 2.4G Black SK-8861 LA-AR
00XH950	USB Calliope KB SR BUL
00XH633	USB Calliope KB BK NORDIC
01AH639	Liteon 2.4G Black SK-8861 CH
01AH632	Liteon 2.4G Black SK-8861 US-IN
01AH638	Liteon 2.4G Black SK-8861 SA
01AH645	Liteon 2.4G Black SK-8861 IL
00XH959	USB Calliope KB SR GRE
01AH641	Liteon 2.4G Black SK-8861 TR
00XH948	USB Calliope KB SR BEL ENG
00XH976	USB Calliope KB SR SPA
01AH642	Liteon 2.4G Black SK-8861 ES
00XH604	USB Calliope KB BK HBW
01AH643	Liteon 2.4G Black SK-8861 SL
00XH605	USB Calliope KB BK HUN
01AH644	Liteon 2.4G Black SK-8861 IT
00XH607	USB Calliope KB BK ITA
01AH640	Liteon 2.4G Black SK-8861 DE
00XH598	USB Calliope KB BK FRA
00XH971	USB Calliope KB SR POR

00XH967	USB Calliope KB SR KOR
00XH602	USB Calliope KB BK GRE
00XH601	USB Calliope KB BK GER
01AH646	Liteon 2.4G Black SK-8861 FR
00XH627	USB Calliope KB BK SLV
01AH653	Liteon 2.4G Black SK-8861 PT
00XH952	USB Calliope KB SR CZE
01AH654	Liteon 2.4G Black SK-8861 BE-EN
00XH626	USB Calliope KB BK EURO ENG
01AH655	Liteon 2.4G Black SK-8861 US-EU
00XH945	USB Calliope KB SR ARA
00XH944	USB Calliope KB SR ENG
00XH987	USB Calliope KB SR IND ENG
00XH964	USB Calliope KB SR ITA
00XH982	USB Calliope KB SR UKE
00XH610	USB Calliope KB BK KOR
00XH973	USB Calliope KB SR RUS
00XH608	USB Calliope KB BK JPN
01AH650	Liteon 2.4G Black SK-8861 KR
01AH649	Liteon 2.4G Black SK-8861 BG
00UW407	Liteon SK-8861 2.4G KB(BR)-BLK
01AH652	Liteon 2.4G Black SK-8861 EN-FR
01AH651	Liteon 2.4G Black SK-8861 JP
00XH962	USB Calliope KB SR HUN
00XH949	USB Calliope KB SR BRL
00XH983	USB Calliope KB SR EURO ENG
00XH621	USB Calliope KB BK SWS
00XH978	USB Calliope KB SR SWS
00XH622	USB Calliope KB BK THAI
00XH990	USB Calliope KB SR NORDIC
00XH968	USB Calliope KB SR LA SPA
00XH958	USB Calliope KB SR GER
00XH630	USB Calliope KB BK IND ENG
00XH618	USB Calliope KB BK SLK
01AH647	Liteon 2.4G Black SK-8861 GR
00XH625	USB Calliope KB BK UKE
00XH619	USB Calliope KB BK SPA
01AH648	Liteon 2.4G Black SK-8861 HU
00XH624	USB Calliope KB BK TUR
00XH611	USB,Calliope,KB,BK,LA SPA

00XH984	USB Calliope KB SR SLV
00XH594	USB Calliope KB BK TC/ENG
00XH614	USB Calliope KB BK POR
00XH979	USB Calliope KB SR THAI
00XH595	USB Calliope KB BK CZE
00XH593	USB Calliope KB BK BUL
00XH591	USB,Calliope,KB,BK,BEL ENG
00XH616	USB Calliope KB BK RUS
00XH981	USB Calliope KB SR TUR
01AH630	Liteon 2.4G Black SK-8861 TH
00XH961	USB Calliope KB SR HBW
01AH631	Liteon 2.4G Black SK-8861 CS-SK
00XH587	USB Calliope KB BK ENG
00XH951	USB Calliope KB SR TC/ENG
01AH627	Liteon 2.4G Black SK-8861 US
01AH634	Liteon 2.4G Black SK-8861 GB
00XH588	USB Calliope KB BK ARA
00XH955	USB Calliope KB SR FRA
01AH628	Liteon 2.4G Black SK-8861 US-MY
00XH635	USB Calliope KB BK CAN ENG/FRA
01AH635	Liteon 2.4G Black SK-8861 Nordic
00XH992	USB Calliope KB SR CAN EN/FR
01AH629	Liteon 2.4G Black SK-8861 TW
00XH965	USB Calliope KB SR JPN
00XH975	USB Calliope KB SR SLK
01AH636	Liteon 2.4G Black SK-8861 LA
HDD_ASM	
45K0623	HDD,1TB,7200,DT3,SATA3,STD
00PC552	HDD,2TB,7200,DT3,SATA3,STD
45K0629	HDD,500G,7200,DT3,SATA3,STD
00PC550	HDD,500G,7200,DT3,SATA3,STD
45K0625	HDD,2TB,7200,DT3,SATA3,STD
00PC551	HDD,1TB,7200,DT3,SATA3,STD

HEATSINK	
00XD252	CPU Heatsink 18W
KYB_MOUSE	
00XH853	WL KM Calliope SR TC/ENG
00XH852	WL KM Calliope SR BUL
00XH880	WL KM Calliope SR SWS
00XH861	WL KM Calliope SR GRE/UK
00XH863	WL KM Calliope SR HBW
00XH895	WL KM Calliope SR NoBAT LA SPA
00XH875	WL KM Calliope SR RUS
00XH883	WL KM Calliope SR TUR
00XH889	WL KM Calliope SR IND ENG
00XH867	WL KM Calliope SR JPN
00XH892	WL KM Calliope SR Nordic
00XH851	WL KM Calliope SR NoBAT BRL
00XH866	WL KM Calliope SR ITA
00XH881	WL KM Calliope SR THAI
00XH860	WL KM Calliope SR GER
00XH857	WL KM Calliope SR FRA
00XH878	WL KM Calliope SR SPA
00XH884	WL KM Calliope SR UKE
00XH869	WL KM Calliope SR KOR
00XH877	WL KM Calliope SR SLK
00XH864	WL KM Calliope SR HUN
00PH144	USB Calliope Mouse SR-GY
00XH854	WL KM Calliope SR CZE
00XH886	WL KM Calliope SR SLV
00XH873	WL KM Calliope SR POR
00XH885	WL KM Calliope SR Euro ENG
00XH870	WL KM Calliope SR LA SPA
00XH850	WL KM Calliope SR BEL ENG
00XH846	Primax RFBU71 2.4G SVG US
00XH847	WL KM Calliope SR ARA
00XH894	WL KM Calliope SR CAN ENG/FRA

LINECORD	
00XL002	Fru, JP,Anti-TR,1M,2P,NON-LH
00XL052	Fru, US/CA,1M,3P,NON-LH
00XL086	Fru, LINECORD,IL,1M,3P,NON-LH
00XL090	Fru, LINECORD,CN,1M,3P,NON-LH
00XL092	Fru, LINECORD,TW,1M,3P,NON-LH
00XL068	Fru, LINECORD,DK,1M,3P,NON-LH
00XL074	Fru, LINECORD,IT,1M,3P,NON-LH
00XL066	Fru, LINECORD,DK,1M,3P,NON-LH
00XL071	Fru, LINECORD,CH,1M,3P,NON-LH
00XL057	Fru, LINECORD,AR,1M,3P,NON-LH
00XL003	Fru, JP,Anti-TR,1M,2P,NON-LH
00XL079	Fru, LINECORD,AU,1M,3P,NON-LH
00XL060	Fru, LINECORD,BR,1M,3P,NON-LH
00XL058	Fru, LINECORD,AR,1M,3P,NON-LH
00XL062	Fru, LINECORD,BR,1M,3P,NON-LH
00XL096	Fru, LINECORD,IN,1M,3P,NON-LH
00XL084	Fru, LINECORD,IL,1M,3P,NON-LH
00XL070	Fru, LINECORD,CH,1M,3P,NON-LH
00XL064	Fru, EU/KR,1M,3P,NON-LH
00XL097	Fru, LINECORD,TH,1M,3P,NON-LH
00XL065	Fru, EU/KR,1M,3P,NON-LH
00XL091	Fru, LINECORD,TW,1M,3P,NON-LH
00XL063	Fru, EU/KR,1M,3P,NON-LH
00XL059	Fru, LINECORD,AR,1M,3P,NON-LH
00XL072	Fru, LINECORD,IT,1M,3P,NON-LH
00XL061	Fru, LINECORD,BR,1M,3P,NON-LH
00XL069	Fru, LINECORD,CH,1M,3P,NON-LH
00XL093	Fru, LINECORD,TW,1M,3P,NON-LH
00XL081	Fru, LINECORD,ZA,1M,3P,NON-LH
00XL085	Fru, LINECORD,IL,1M,3P,NON-LH
00XL053	Fru, US/CA,1M,3P,NON-LH
00XL082	Fru, LINECORD,ZA,1M,3P,NON-LH
00XL051	Fru,US/CA,1M,3P,NON-LH
00XL077	Fru, LINECORD,GB,1M,3P,NON-LH
00XL073	Fru, LINECORD,IT,1M,3P,NON-LH
00XL075	Fru, LINECORD,GB,1M,3P,NON-LH
00XL067	Fru, LINECORD,DK,1M,3P,NON-LH
00XL078	Fru, LINECORD,AU,1M,3P,NON-LH

00XL083	Fru, LINECORD,ZA,1M,3P,NON-LH
00XL080	Fru, LINECORD,AU,1M,3P,NON-LH
00XL094	Fru, LINECORD,IN,1M,3P,NON-LH
00XL076	Fru, LINECORD,GB,1M,3P,NON-LH
00XL089	Fru, LINECORD,CN,1M,3P,NON-LH
MECH_ASM	
00XD328	HDMI_COVER Kit
01EF919	334DT,Base Chassis Assy,JT
01EF921	334DT,Accessory bag,JT
01EF918	334DT,F-Bezel,nonOdd,JT
01EF917	334DT,F-Bezel,Odd,JT
MECHANICAL	
01EF942	Liteon,PCIe bracket for WIFI
00XD436	VGA rubber cover
MEMORY	
03T7118	SODIMM,8G,DDR3L,1600
03T7117	SODIMM,4G,DDR3L,1600
SSD_ASM	
00XK734	256G,2.5",7mm,SATA3,LIT,OPAL2.0
00XK718	128G,2.5",7mm,SATA3,SAM,STD
00XK719	256G,2.5",7mm,SATA3,SAM,OPAL2.0
00XK726	128G,2.5",7mm,SATA3,SAN,STD
00XK733	128G,2.5",7mm,SATA3,LIT,STD
00XK730	256G,2.5",7mm,SATA3,SAN,OPAL2.0
SHIELD	
01EF801	AVC,SLIM-ODD-EMI Cover
01EF843	Intel APL Rear IO Shield,AVC

MOUSE	
00PH143	Chicony USB Fingerprint MC B_O
01AH700	Liteon SM-8861(WW) Mouse Black
01AH701	Liteon SM-8861 Mouse(MY) Black
00PH131	USB Calliope Mouse Black(Orange wh
00UW408	Liteon SM-8861(WW) Mouse Black
OPT_DRIVE	
45K0494	9.0mm DVD Rambo without bezel
VIDEO_CARD	
01AJ849	MSI GT730 1G 64bit LP
01AJ850	BLD GT730 1G 64bit LP
WIRELESS	
00JT497	Wireless,CMB,IN,3165 ac

Ideacentre 310S-08ASR FRU list

This chapter lists the information on the field replaceable units (FRUs).

Attention: Be sure to read and understand all the safety information before replacing any FRUs.

Ideacentre 310S-08ASR service parts listing	
MT: 90G9	
FRU P/N	Description
AC_ADAPTER	
00PC727	AC_ADAPTER,120W,100-240Vac,3P
00PC728	AC_ADAPTER,150W,100-240Vac,3P
00PC726	AC_ADAPTER,90W,100-240Vac,3P
ANTENNA	
00XJ098	Fru, Lx 8L SMB and IDC Front ANT
BDPLANAR	
00XK158	MB M Stoney A9 WIN DPK
00XK159	MB M Stoney A6 NO DPK
00XK157	MB M Stoney A9 NO DPK
00XK161	MB M Stoney E2 NO DPK
00XK162	MB M Stoney E2 WIN DPK
00XK160	MB M Stoney A6 WIN DPK
BRACKET	

01EF802	AVC,card reader bracket
01EF799	334AT,Slim ODD latch,AVC
CABLE	
00XL187	Fru310mmSATA cable 1 latch S_angle
00XL220	Fru 200mm SATA power cable
00XL186	Fru280mm LED cable :1SW_LED
03T7203	Dual-band dipole antenna 5GHZ
04X2735	Fru, 210mm SMA RF Cable_Tiny3
00XL219	Fru3.5 HDD+ODD Power Cable
00XL214	Fru,SATA PWRcable(250mm+60mm)
CARDPOP	
00PC206	NV GeForce GT730 2G VGA+HDMI LP
CARDREADER	
01AJ839	7 in 1 Card reader
DISPLAY	
5D10L37554	LI2264d-21.5" Monitor,1Yw
DT_KYB	
00XH950	USB Calliope KB SR BUL
00XH633	USB Calliope KB BK NORDIC
00XH959	USB Calliope KB SR GRE
00XH948	USB Calliope KB SR BEL ENG
00XH976	USB Calliope KB SR SPA
00XH604	USB Calliope KB BK HBW
00XH605	USB Calliope KB BK HUN
00XH607	USB Calliope KB BK ITA
00XH598	USB Calliope KB BK FRA
00XH971	USB Calliope KB SR POR
00XH967	USB Calliope KB SR KOR
00XH602	USB Calliope KB BK GRE
00XH601	USB Calliope KB BK GER
00XH627	USB Calliope KB BK SLV
00XH952	USB Calliope KB SR CZE
00XH626	USB Calliope KB BK EURO ENG
00XH945	USB Calliope KB SR ARA
00XH944	USB Calliope KB SR ENG
00XH987	USB Calliope KB SR IND ENG

00XH964	USB Calliope KB SR ITA
00XH982	USB Calliope KB SR UKE
00XH610	USB Calliope KB BK KOR
00XH973	USB Calliope KB SR RUS
00XH608	USB Calliope KB BK JPN
00XH962	USB Calliope KB SR HUN
00XH949	USB Calliope KB SR BRL
00XH983	USB Calliope KB SR EURO ENG
00XH621	USB Calliope KB BK SWS
00XH978	USB Calliope KB SR SWS
00XH622	USB Calliope KB BK THAI
00XH990	USB Calliope KB SR NORDIC
00XH968	USB Calliope KB SR LA SPA
00XH958	USB Calliope KB SR GER
00XH630	USB Calliope KB BK IND ENG
00XH618	USB Calliope KB BK SLK
00XH625	USB Calliope KB BK UKE
00XH619	USB Calliope KB BK SPA
00XH624	USB Calliope KB BK TUR
00XH611	USB,Calliope,KB,BK,LA SPA
00XH984	USB Calliope KB SR SLV
00XH594	USB Calliope KB BK TC/ENG
00XH614	USB Calliope KB BK POR
00XH979	USB Calliope KB SR THAI
00XH595	USB Calliope KB BK CZE
00XH593	USB Calliope KB BK BUL
00XH591	USB,Calliope,KB,BK,BEL ENG
00XH616	USB Calliope KB BK RUS
00XH981	USB Calliope KB SR TUR
00XH961	USB Calliope KB SR HBW
00XH587	USB Calliope KB BK ENG
00XH951	USB Calliope KB SR TC/ENG
00XH588	USB Calliope KB BK ARA
00XH955	USB Calliope KB SR FRA
00XH635	USB Calliope KB BK CAN ENG/FRA
00XH992	USB Calliope KB SR CAN EN/FR
00XH965	USB Calliope KB SR JPN
00XH975	USB Calliope KB SR SLK

HDD_ASM	
45K0623	HDD,1TB,7200,DT3,SATA3,STD
00PC552	HDD,2TB,7200,DT3,SATA3,STD
45K0629	HDD,500G,7200,DT3,SATA3,STD
00PC550	HDD,500G,7200,DT3,SATA3,STD
45K0625	HDD,2TB,7200,DT3,SATA3,STD
00PC551	HDD,1TB,7200,DT3,SATA3,STD
HEATSINK	
01EF369	A 18W CPU Cooler for Stoney Rid
KYB_MOUSE	
00XH853	WL KM Calliope SR TC/ENG
25209181	Liteon SK-8861(RU) 2.4G KB-Black8
00XH852	WL KM Calliope SR BUL
25209180	Liteon SK-8861(US-IN) 2.4G KB-Black8
25203464	Liteon SM-8861(WW) Mouse Black
00XH880	WL KM Calliope SR SWS
00XH861	WL KM Calliope SR GRE/UK
00XH863	WL KM Calliope SR HBW
25209192	Liteon SK-8861(IT) 2.4G KB-Black8
25209193	Liteon SK-8861(IL) 2.4G KB-Black8
00XH895	WL KM Calliope SR NoBAT LA SPA
25209201	Liteon SK-8861(PT) 2.4G KB-Black8
25209184	Liteon SK-8861(LA) 2.4G KB-Black8

00XH875	WL KM Calliope SR RUS
00XH883	WL KM Calliope SR TUR
00XH889	WL KM Calliope SR IND ENG
25209182	Liteon SK-8861(GB) 2.4G KB-Black8
25209183	Liteon SK-8861(Nordic) 2.4G KB-Black8
00XH867	WL KM Calliope SR JPN
00XH892	WL KM Calliope SR Nordic
25209176	Liteon SK-8861(US-MY) 2.4G KB-Black8
00XH851	WL KM Calliope SR NoBAT BRL
00XH866	WL KM Calliope SR ITA
25209175	Liteon SK-8861(US) 2.4G KB-Black8
00XH881	WL KM Calliope SR THAI
00XH860	WL KM Calliope SR GER
00XH857	WL KM Calliope SR FRA
25209190	Liteon SK-8861(ES) 2.4G KB-Black8
25209198	Liteon SK-8861(KR) 2.4G KB-Black8
25209200	Liteon SK-8861(EN-FR) 2.4G KB-Black8
25205773	Liteon SM-8861(JP) Mouse-Black
25209194	Liteon SK-8861(FR) 2.4G KB-Black8
25209199	Liteon SK-8861(JP) 2.4G KB-Black8
25209197	Liteon SK-8861(BG) 2.4G KB-Black8
25209191	Liteon SK-8861(SL) 2.4G KB-Black8
25209177	Liteon SK-8861(TW) 2.4G KB-Black8
00XH878	WL KM Calliope SR SPA
00XH884	WL KM Calliope SR UKE
00XH869	WL KM Calliope SR KOR
25209178	Liteon SK-8861(TH) 2.4G KB-Black8
25209179	Liteon SK-8861(CS-SK) 2.4G KB-Black8
00XH877	WL KM Calliope SR SLK
25209186	Liteon SK-8861(SA) 2.4G KB-Black8
25209185	Liteon SK-8861(LA-AR) 2.4G KB-Black8
00XH864	WL KM Calliope SR HUN
25209189	Liteon SK-8861(TR) 2.4G KB-Black8
00PH144	USB Calliope Mouse SR-GY
25209188	Liteon SK-8861(DE) 2.4G KB-Black8
00XH854	WL KM Calliope SR CZE
25209187	Liteon SK-8861(CH) 2.4G KB-Black8
00XH886	WL KM Calliope SR SLV
00XH873	WL KM Calliope SR POR
25209203	Liteon SK-8861(US-EU) 2.4G KB-Black8

25209202	Liteon SK-8861(BE-EN) 2.4G KB-Black8
00XH885	WL KM Calliope SR Euro ENG
00XH870	WL KM Calliope SR LA SPA
00XH850	WL KM Calliope SR BEL ENG
25203465	Liteon SM-8861 Mouse(No Battery) Black
00XH846	Primax RFBU71 2.4G SVG US
25209196	Liteon SK-8861(HU) 2.4G KB-Black8
00XH847	WL KM Calliope SR ARA
25209195	Liteon SK-8861(GR) 2.4G KB-Black8
00XH894	WL KM Calliope SR CAN ENG/FRA
LINECORD	
00XL002	Fru, JP,Anti-TR,1M,2P,NON-LH
00XL041	Fru, LINECORD,AU,1.8M,3P,NON-LH
00XL014	Fru, EU/KR,1.8M,3P,NON-LH
00XL052	Fru, US/CA,1M,3P,NON-LH
00XL024	Fru, LINECORD,GB,1.8M,3P,NON-LH
00XL018	Fru, LINECORD,TW,1.8M,3P,NON-LH
00XL086	Fru, LINECORD,IL,1M,3P,NON-LH
00XL090	Fru, LINECORD,CN,1M,3P,NON-LH
00XL092	Fru, LINECORD,TW,1M,3P,NON-LH
00XL068	Fru, LINECORD,DK,1M,3P,NON-LH
00XL074	Fru, LINECORD,IT,1M,3P,NON-LH
00XL066	Fru, LINECORD,DK,1M,3P,NON-LH
00XL071	Fru, LINECORD,CH,1M,3P,NON-LH
00XL034	Fru, LINECORD,BR,1.8M,3P,NON-LH
00XL057	Fru, LINECORD,AR,1M,3P,NON-LH
00XL003	Fru, JP,Anti-TR,1M,2P,NON-LH
00XL010	Fru, LINECORD,CN,1.8M,3P,NON-LH
00XL037	Fru, LINECORD,AR,1.8M,3P,NON-LH
00XL079	Fru, LINECORD,AU,1M,3P,NON-LH
00XL060	Fru, LINECORD,BR,1M,3P,NON-LH

00XL058	Fru, LINECORD,AR,1M,3P,NON-LH
00XL062	Fru, LINECORD,BR,1M,3P,NON-LH
00XL044	Fru, LINECORD,DK,1.8M,3P,NON-LH
00XL096	Fru, LINECORD,IN,1M,3P,NON-LH
00XL017	Fru, LINECORD,TW,1.8M,3P,NON-LH
00XL033	Fru, LINECORD,BR,1.8M,3P,NON-LH
00XL048	Fru, LINECORD,IT,1.8M,3P,NON-LH
00XL032	Fru, LINECORD,BR,1.8M,3P,NON-LH
00XL084	Fru, LINECORD,IL,1M,3P,NON-LH
00XL070	Fru, LINECORD,CH,1M,3P,NON-LH
00XL064	Fru, EU/KR,1M,3P,NON-LH
00XL097	Fru, LINECORD,TH,1M,3P,NON-LH
00XL065	Fru, EU/KR,1M,3P,NON-LH
00XL091	Fru, LINECORD,TW,1M,3P,NON-LH
00XL027	Fru, LINECORD,IL,1.8M,3P,NON-LH
00XL000	Fru, JP,Anti-TR,1.8M,3P,NON-LH
00XL039	Fru, LINECORD,ZA,1.8M,3P,NON-LH
00XL016	Fru, EU/KR,1.8M,3P,NON-LH
00XL063	Fru, EU/KR,1M,3P,NON-LH
00XL059	Fru, LINECORD,AR,1M,3P,NON-LH
00XL031	Fru, LINECORD,CH,1.8M,3P,NON-LH
00XL072	Fru, LINECORD,IT,1M,3P,NON-LH
00XL061	Fru, LINECORD,BR,1M,3P,NON-LH
00XL042	Fru, LINECORD,AU,1.8M,3P,NON-LH
00XL004	Fru,US/CA,1.8M,3P,NON-LH
00XL006	Fru, US/CA,1.8M,3P,NON-LH
00XL069	Fru, LINECORD,CH,1M,3P,NON-LH
00XL038	Fru, LINECORD,ZA,1.8M,3P,NON-LH
00XL020	Fru, LINECORD,IN,1.8M,3P,NON-LH
00XL022	Fru, LINECORD,IN,1.8M,3P,NON-LH
00XL093	Fru, LINECORD,TW,1M,3P,NON-LH
00XL023	Fru, LINECORD,GB,1.8M,3P,NON-LH
00XL050	Fru, LINECORD,TH,1.8M,3P,NON-LH
00XL025	Fru, LINECORD,GB,1.8M,3P,NON-LH
00XL081	Fru, LINECORD,ZA,1M,3P,NON-LH
00XL085	Fru, LINECORD,IL,1M,3P,NON-LH
00XL053	Fru, US/CA,1M,3P,NON-LH
00XL035	Fru, LINECORD,AR,1.8M,3P,NON-LH
00XL019	Fru, LINECORD,TW,1.8M,3P,NON-LH
00XL029	Fru, LINECORD,CH,1.8M,3P,NON-LH

00XL082	Fru, LINECORD,ZA,1M,3P,NON-LH
00XL046	Fru, LINECORD,DK,1.8M,3P,NON-LH
00XL036	Fru, LINECORD,AR,1.8M,3P,NON-LH
00XL043	Fru, LINECORD,AU,1.8M,3P,NON-LH
00XL045	Fru, LINECORD,DK,1.8M,3P,NON-LH
00XL001	Fru, JP,Anti-TR,1.8M,3P,NON-LH
00XL051	Fru,US/CA,1M,3P,NON-LH
00XL030	Fru, LINECORD,CH,1.8M,3P,NON-LH
00XL077	Fru, LINECORD,GB,1M,3P,NON-LH
00XL040	Fru, LINECORD,ZA,1.8M,3P,NON-LH
00XL005	Fru, US/CA,1.8M,3P,NON-LH
00XL073	Fru, LINECORD,IT,1M,3P,NON-LH
00XL075	Fru, LINECORD,GB,1M,3P,NON-LH
00XL015	Fru, EU/KR,1.8M,3P,NON-LH
00XL049	Fru, LINECORD,IT,1.8M,3P,NON-LH
00XL067	Fru, LINECORD,DK,1M,3P,NON-LH
00XL078	Fru, LINECORD,AU,1M,3P,NON-LH
00XL028	Fru, LINECORD,IL,1.8M,3P,NON-LH
00XL083	Fru, LINECORD,ZA,1M,3P,NON-LH
00XL009	Fru, LINECORD,CN,1.8M,3P,NON-LH
00XL026	Fru, LINECORD,IL,1.8M,3P,NON-LH
00XL080	Fru, LINECORD,AU,1M,3P,NON-LH
00XL094	Fru, LINECORD,IN,1M,3P,NON-LH
00XL047	Fru, LINECORD,IT,1.8M,3P,NON-LH
00XL076	Fru, LINECORD,GB,1M,3P,NON-LH
00XL089	Fru, LINECORD,CN,1M,3P,NON-LH
MECH_ASM	
00XD328	HDMI_COVER Kit
01EF919	334DT,Base Chassis Assy,JT
01EF921	334DT,Accessory bag,JT
01EF918	334DT,F-Bezel,nonOdd,JT
01EF917	334DT,F-Bezel,Odd,JT
MECHANICAL	
01EF942	Liteon,PCIe bracket for WIFI
00XD436	VGA rubber cover

MEMORY	
01AG805	8GB DDR4 2400UDIMM
01AG804	4GB DDR4 2400UDIMM
SSD_ASM	
00XK718	128G,2.5",7mm,SATA3,SAM,STD
00XK734	256G,2.5",7mm,SATA3,LIT,OPAL2.0
00XK719	256G,2.5",7mm,SATA3,SAM,OPAL2.0
00XK726	128G,2.5",7mm,SATA3,SAN,STD
00XK733	128G,2.5",7mm,SATA3,LIT,STD
00XK730	256G,2.5",7mm,SATA3,SAN,OPAL2.0
SPEAKERINT	
01AH932	Lenovo M0620 Speaker
SHIELD	
01EF801	AVC,SLIM-ODD-EMI Cover
MOUSE	
00PH143	Chicony USB Fingerprint MC B_O
00PH131	USB Calliope Mouse Black(Orange wh
OPT_DRIVE	
45K0494	9.0mm DVD Rambo without bezel
VIDEO_CARD	
01AJ849	MSI GT730 1G 64bit LP
01AJ850	BLD GT730 1G 64bit LP
WIRELESS	
01AX709	Wireless,CMB,LTN,NFA435A

Chapter 9. General information

This chapter provides general information that applies to all machine types supported by this publication.

Additional Service Information

This chapter provides additional information that the service representative might find helpful.

Power management

Power management reduces the power consumption of certain components of the computer such as the system power supply, processor, hard disk drives, and some monitors.

Advanced configuration and power interface (ACPI) BIOS

As this computer has an ACPI BIOS system, the operating system is allowed to control the power management features of the computer and the settings for Advanced Power Management (APM) BIOS mode is ignored. Not all operating systems support ACPI BIOS mode.

Automatic Power-On features

The Automatic Power-On features within the Power Management menu allow you to enable and disable features that turn on the computer automatically.

- Wake Up on Alarm: You can specify a date and time at which the computer will be turned on automatically. This can be either a single event , a daily event or a weekly event.
- Wake Up on LAN: This feature allows LAN adapter card to wake the System.

© Copyright Lenovo 2016