NMPRO-M1

SPECIFICATIONS

*Please note: The inch sizes stated are just an indication, combined with the weight and VESA sizes. The maximum weight and VESA size are absolute restrictions for the products and should not be exceeded.





NMPRO-M1

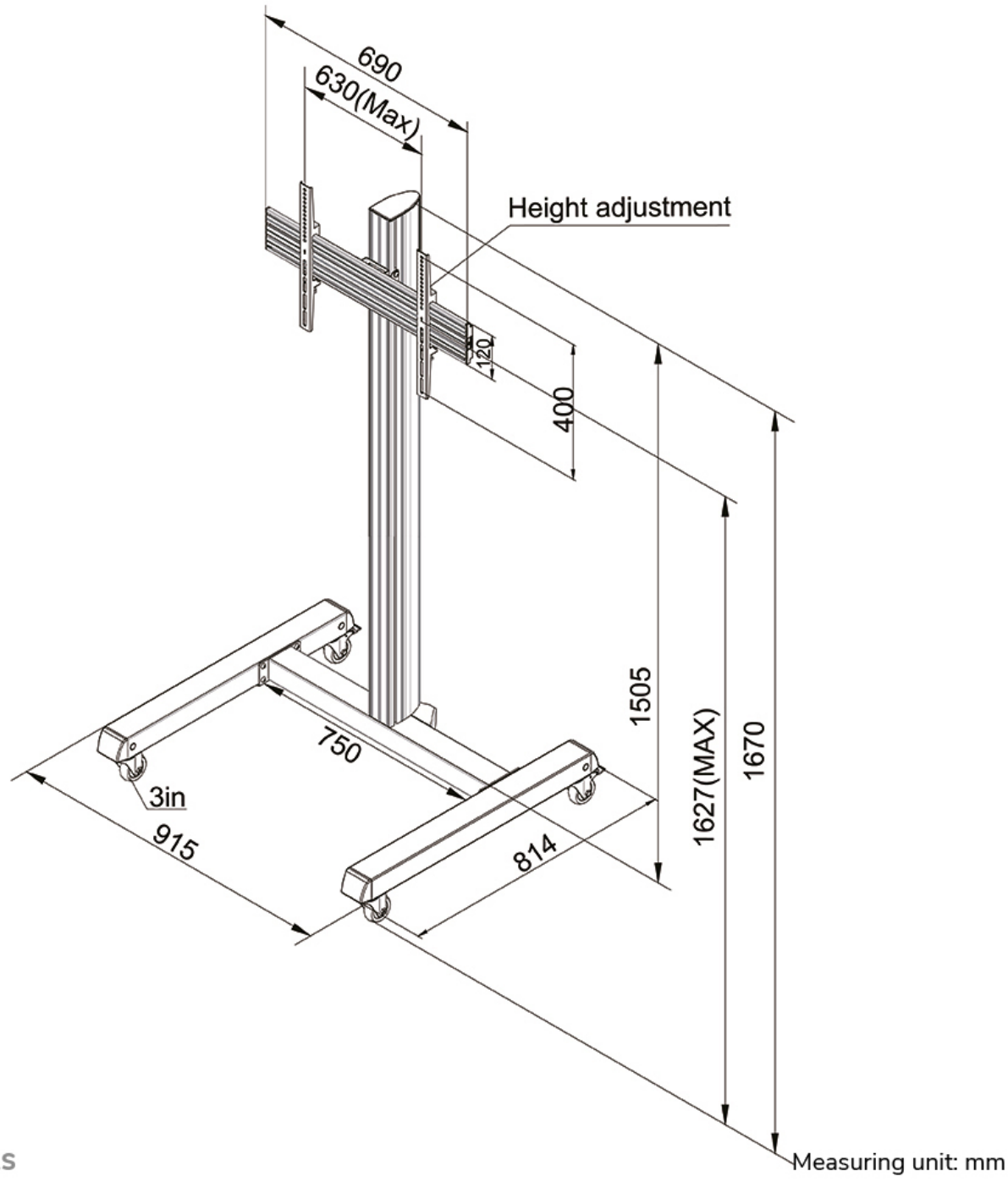
690
630(Max)
Height adjustment
120
400
1505
1627(MAX)
1670
750
3in
915
814
Neomounts
Measuring unit: mm