RS700A-E9 Series

RS700A-E9-RS4
RS700A-E9-RS12

1U Rackmount Server User Guide



E17246
Revised Edition V9
August 2020

Copyright © 2020 ASUSTeK COMPUTER INC. All Rights Reserved.

No part of this manual, including the products and software described in it, may be reproduced, transmitted, transcribed, stored in a retrieval system, or translated into any language in any form or by any means, except documentation kept by the purchaser for backup purposes, without the express written permission of ASUSTeK COMPUTER INC. (“ASUS”).

ASUS provides this manual “as is” without warranty of any kind, either express or implied, including but not limited to the implied warranties or conditions of merchantability or fitness for a particular purpose. In no event shall ASUS, its directors, officers, employees, or agents be liable for any indirect, special, incidental, or consequential damages (including damages for loss of profits, loss of business, loss of use or data, interruption of business and the like), even if ASUS has been advised of the possibility of such damages arising from any defect or error in this manual or product.

Specifications and information contained in this manual are furnished for informational use only, and are subject to change at any time without notice, and should not be construed as a commitment by ASUS. ASUS assumes no responsibility or liability for any errors or inaccuracies that may appear in this manual, including the products and software described in it.

Product warranty or service will not be extended if: (1) the product is repaired, modified or altered, unless such repair, modification of alteration is authorized in writing by ASUS; or (2) the serial number of the product is defaced or missing.

Products and corporate names appearing in this manual may or may not be registered trademarks or copyrights of their respective companies, and are used only for identification or explanation and to the owners’ benefit, without intent to infringe.

Contents

Safety information ..... **vii**
About this guide ..... **ix**

Chapter 1: Product Introduction

1.1 System package contents **1-2**
1.2 Serial number label **1-3**
1.3 System specifications **1-4**
1.4 Front panel features **1-7**
1.5 Rear panel features **1-8**
1.6 Internal features **1-9**
1.7 LED information **1-11**
1.7.1 Front panel LEDs 1-11
1.7.2 Storage device status LED 1-12
1.7.3 LAN (RJ-45) LEDs 1-13
1.7.4 Rear panel LEDs 1-13
1.7.5 Q-Code table 1-14

Chapter 2: Hardware Information

2.1 Chassis cover **2-2**
2.2 Central Processing Unit (CPU) **2-3**
2.2.1 Installing the CPU and heatsink 2-3
2.3 System memory **2-7**
2.3.1 Overview 2-7
2.3.2 Memory Configurations 2-8
2.3.3 Installing a DIMM on a single clip DIMM socket 2-9
2.4 Storage devices **2-10**
2.5 Expansion slot **2-17**
2.5.1 Installing an expansion card to the riser card bracket 2-17
2.5.2 Installing an expansion card to the butterfly riser card bracket 2-18
2.5.3 Installing an ASUS PIKE II card 2-21
2.5.4 Installing an ASUS PCIe-NVME2-OCuLink card to the butterfly riser card bracket (optional for RS700A-E9-RS12 only) 2-24
2.5.5 Installing an ASUS PCIe-NVME4-OCuLink card to the riser card bracket (optional for RS700A-E9-RS12 only) 2-27
2.5.6 Configuring an expansion card 2-29
2.5.7 Installing Mezzanine cards 2-30
2.5.8 Installing M.2 (NGFF) cards 2-33

Contents

2.6 Cable connections 2-35

2.7 Backplane cabling 2-36

2.8 Storage device configuration and cabling (for RS700A-E9-RS12 only) 2-38

2.8.1 8 x SATA storage device configuration and cabling 2-39

2.8.2 10 x SATA storage device configuration and cabling 2-42

2.8.3 8 x SATA/SAS and 4 x SATA storage device configuration and cabling 2-46

2.8.4 2 x NVMe storage device configuration and cabling 2-51

2.8.5 4 x NVMe storage device configuration and cabling 2-54

2.8.6 8 x NVMe storage device configuration and cabling 2-59

2.9 Removable/optional components 2-65

2.9.1 System fans 2-65

2.9.2 Redundant power supply module 2-66

2.9.3 Replacing optical drive (optional for RS700A-E9-RS4) 2-67

Chapter 3: Installation Options

3.1 Tool-less Friction Rail Kit 3-2

3.2 Rail kit dimensions 3-4

Chapter 4: Motherboard Information

4.1 Motherboard layout 4-2

4.2 Jumpers 4-4

4.3 Internal LEDs 4-9

4.4 Internal connectors 4-12

4.5 Motherboard layout (revised motherboard) 4-24

4.6 Jumpers (revised motherboard) 4-26

4.7 Internal LEDs (revised motherboard) 4-31

4.8 Internal connectors (revised motherboard) 4-34

Contents

Chapter 5: BIOS Setup

5.1 Managing and updating your BIOS 5-2

5.1.1 ASUS CrashFree BIOS 3 utility 5-2

5.1.2 ASUS EZ Flash Utility 5-3

5.1.3 BUPDATER utility 5-4

5.2 BIOS setup program 5-6

5.2.1 BIOS menu screen 5-7

5.2.2 Menu bar 5-7

5.2.3 Menu items 5-8

5.2.4 Submenu items 5-8

5.2.5 Navigation keys 5-8

5.2.6 General help 5-8

5.2.7 Configuration fields 5-8

5.2.8 Pop-up window 5-8

5.2.9 Scroll bar 5-8

5.3 Main menu 5-9

5.3.1 System Date [Day xx/xx/xxxx] 5-9

5.3.2 System Time [xx:xx:xx] 5-9

5.4 Advanced menu 5-10

5.4.1 Trusted Computing 5-11

5.4.2 PSP Firmware Versions 5-11

5.4.3 APM 5-12

5.4.4 Smart Settings 5-13

5.4.5 NCT6793D Super IO Configuration 5-13

5.4.6 Onboard LAN Configuration 5-14

5.4.7 Serial Port Console Redirection 5-15

5.4.8 CPU Configuration 5-17

5.4.9 PCI Subsystem Settings 5-18

5.4.10 Network Stack Configuration 5-19

5.4.11 CSM Configuration 5-20

5.4.12 NVMe Configuration 5-21

5.4.13 SATA Configuration 5-21

5.4.14 USB Configuration 5-22

5.4.15 iSCSI Configuration 5-23

5.5 Chipset menu 5-24

5.6 Security menu 5-25

Contents

5.7 Boot menu 5-28
5.8 Tool menu 5-29
5.9 Save & Exit menu 5-29
5.10 AMD CBS menu 5-31
5.10.1 Zen Common Options 5-31
5.10.2 DF Common Options 5-31
5.10.3 UMC Common Option 5-32
5.10.4 NBIO Common Options 5-32
5.11 Event Logs menu 5-33
5.11.1 Change Smbios Event Log Settings 5-33
5.11.2 View Smbios Event Log 5-33
5.12 Server Mgmt menu 5-34

Chapter 6: Driver Installation

6.1 Management applications and utilities installation 6-2
6.2 Running the Support DVD 6-2
6.3 AMD chipset device software installation 6-5
6.4 Installing the Intel® I350-AM2 Gigabit Adapters driver 6-6
6.5 VGA driver installation 6-8

Appendix

KNPP-D32 block diagram A-2
Notices A-3
ASUS contact information A-6

Safety information

Electrical Safety

- Before installing or removing signal cables, ensure that the power cables for the system unit and all attached devices are unplugged.
- To prevent electrical shock hazard, disconnect the power cable from the electrical outlet before relocating the system.
- When adding or removing any additional devices to or from the system, ensure that the power cables for the devices are unplugged before the signal cables are connected. If possible, disconnect all power cables from the existing system before you add a device.
- If the power supply is broken, do not try to fix it by yourself. Contact a qualified service technician or your dealer.

Operation Safety

- Any mechanical operation on this server must be conducted by certified or experienced engineers.
- Before operating the server, carefully read all the manuals included with the server package.
- Before using the server, ensure all cables are correctly connected and the power cables are not damaged. If any damage is detected, contact your dealer as soon as possible.
- To avoid short circuits, keep paper clips, screws, and staples away from connectors, slots, sockets and circuitry.
- Avoid dust, humidity, and temperature extremes. Place the server on a stable surface.
- If you encounter technical problems with the product, contact a qualified service technician or your retailer.



This product is equipped with a three-wire power cable and plug for the user's safety. Use the power cable with a properly grounded electrical outlet to avoid electrical shock.

Lithium-Ion Battery Warning

CAUTION! Danger of explosion if battery is incorrectly replaced. Replace only with the same or equivalent type recommended by the manufacturer. Dispose of used batteries according to the manufacturer's instructions.

Heavy System

CAUTION! This server system is heavy. Ask for assistance when moving or carrying the system.

Optical Drive Safety Information

Laser Safety Information



To prevent exposure to the optical drive's laser, do not attempt to disassemble or repair the optical drive by yourself. For your safety, contact a professional technician for assistance.

About this guide

Audience

This user guide is intended for system integrators, and experienced users with at least basic knowledge of configuring a server.

Contents

This guide contains the following parts:

1. **Chapter 1: Product Introduction**

   This chapter describes the general features of the server, including sections on front panel and rear panel specifications.

2. **Chapter 2: Hardware Information**

   This chapter lists the hardware setup procedures that you have to perform when installing or removing system components.

3. **Chapter 3: Installation Options**

   This chapter describes how to install optional components into the barebone server.

4. **Chapter 4: Motherboard Information**

   This chapter gives information about the motherboard that comes with the server. This chapter includes the motherboard layout, jumper settings, and connector locations.

5. **Chapter 5: BIOS Setup**

   This chapter tells how to change system settings through the BIOS Setup menus and describes the BIOS parameters.

6. **Chapter 6: Driver Installation**

   This chapter provides instructions for installing the necessary drivers for different system components.

Conventions

To ensure that you perform certain tasks properly, take note of the following symbols used throughout this manual.



DANGER/WARNING: Information to prevent injury to yourself when trying to complete a task.



CAUTION: Information to prevent damage to the components when trying to complete a task.



IMPORTANT: Instructions that you MUST follow to complete a task.



NOTE: Tips and additional information to help you complete a task.

Typography

Bold text	Indicates a menu or an item to select.
Italics	Used to emphasize a word or a phrase.
<Key>	Keys enclosed in the less-than and greater-than sign means that you must press the enclosed key. Example: <Enter> means that you must press the Enter or Return key.
<Key1>+<Key2>+<Key3>	If you must press two or more keys simultaneously, the key names are linked with a plus sign (+). Example: <Ctrl>+<Alt>+<Del>
`Command`	Means that you must type the command exactly as shown, then supply the required item or value enclosed in brackets. Example: At the DOS prompt, type the command line: **`format A:/S`**

References

Refer to the following sources for additional information, and for product and software updates.

1. **ASUS Control Center (ACC) user guide**

   This manual tells how to set up and use the proprietary ASUS server management utility. Visit asuscontrolcenter.asus.com for more information.

2. **ASUS websites**

   The ASUS websites worldwide provide updated information for all ASUS hardware and software products. Refer to the ASUS contact information.

1 Product Introduction

This chapter describes the general features of the chassis kit. It includes sections on front panel and rear panel specifications.

1.1 System package contents

Check your system package for the following items.

Model Name	RS700A-E9-RS4	RS700A-E9-RS12
Chassis	ASUS R12F 1U Rackmount Chassis	ASUS R12F 1U Rackmount Chassis
Motherboard	ASUS KNPP-D32 Server Board	ASUS KNPP-D32 Server Board
Component	1 x 800W 80PLUS Platinum Power Supply 1 x 3.5-inch Storage Device Backplane 4 x 3.5-inch Storage Device Trays or Dummy Trays 1 x Front Panel Board 2 x Riser Card 8 x System Fans (40 mm x 40 mm x 56 mm)	1 x 800W 80PLUS Platinum Power Supply 1 x 2.5-inch Storage Device Backplane 12 x 2.5-inch Storage Device Trays or Dummy Trays 1 x Front Panel Board 2 x Riser Card 8 x System Fans (40 mm x 40 mm x 56 mm) 1 x PCIe-NVME2-OCuLink card
Accessories	1 x AMD EPYC™ Support DVD 1 x Bag of Screws 2 x CPU Heatsink 2 x AC Power Cable	1 x AMD EPYC™ Support DVD 1 x Bag of Screws 2 x CPU Heatsink 2 x AC Power Cable
Optional Items	1 x Redundant 800W 80PLUS Platinum Power Supply (Second PSU) 1 x Friction Rail Kit 1 x Slim type DVD-RW	1 x Redundant 800W 80PLUS Platinum Power Supply (Second PSU) 1 x Friction Rail Kit 2 x OCuLink to OCuLink cables for NVMe 1 x PCIe-NVME2-OCuLink card with two cables 1 x PCIe-NVME4-OCuLink card with four cables

If any of the above items is damaged or missing, contact your retailer.

1.2 Serial number label

The product's serial number contains 12 characters such as xxS0xxxxxxxx and printed on the sticker at the server's front cover.

The correct serial number of the product is required if you need to request for support from the ASUS Technical Support team.





1.3 System specifications

The ASUS RS700A-E9 Series features the ASUS KNPP-D32 server board. The server supports AMD EPYC™ 7000 Series processors plus other latest technologies through the chipsets onboard.

Model Name		RS700A-E9-RS4	RS700A-E9-RS12
Motherboard		KNPP-D32	
Processor Support		AMD EPYC™ 7000 Series xGMI (External Global Memory Interface Link)	
Core Logic		Integrated I/O - No chipset	
Memory	Total Slots	32 (8-channel per CPU, 16 DIMM per CPU)	
	Capacity	Maximum up to 4096GB	
	Memory Type	DDR4 2666 / 2400 / 2133 RDIMM/ LRDIMM *** Refer to ASUS server AVL for the latest update**	
	Memory Size	8GB, 16GB, 32GB (RDIMM) 32GB, 64GB, 128GB (LRDIMM) *** Refer to ASUS server AVL for the latest update**	
Expansion Slots	Total PCI/PCIe/ PIKE Slots	3+1	
	Slot Type	1 x PCIe x16 (Gen3 x16 link), FH, HL 1 x PCIe x16 (Gen3 x8 link), LP 1 x PCIe x8 (Gen3 x8 link), LP 1 x OCP 2.0 Mezzanine (Gen3 x16 link)	1 x PCIe x16 (Gen3 x16 link), FH, HL (For Optional NVME4-OCuLink Card) 1 x PCIe x16 (Gen3 x8 link), LP 1 x PCIe x8 (Gen3 x8 link), LP (For Optional NVME2-OCuLink Card) 1 x OCP 2.0 Mezzanine (Gen3 x16 link)
Disk Controller	SATA Controller	10 x SATA 6Gb/s ports (12 ports on revised motherboard) 2 x M.2 connectors (SATA 6Gb/s & PCIe Gen3 x4 link)	
	SAS Controller	**Optional:** ASUS PIKE II 3008 8-port SAS HBA card ASUS PIKE II 3108 8-port SAS HW RAID card 12G SAS Support	
Storage Bays		4 x 2.5” or 3.5” Hot-swap Storage Bays 2 x M.2 2242/2260/2280/22110 (supports SATA/PCIe M.2)	12 x 2.5” Hot-swap Storage Bays (up to 4 x NVMe/ SATA + 4 x NVMe/SAS/ SATA + 4 x SAS/SATA) 2 x M.2 2242/2260/2280/22110 (supports SATA/PCIe M.2)

(continued on the next page)

Model Name		RS700A-E9-RS4	RS700A-E9-RS12
Networking	LAN	1 x Dual Port Intel® I350-AM2 Gigabit LAN controller 1 x Management port	
Graphic	VGA	Aspeed AST2500 64MB	
Auxiliary Storage Device Bay (Floppy / Optical Drive)		**Optional:** 1 x Slim type Optical Drive Bay	N/A
I/O ports, Switches, and LEDs		**Front I/O Ports:** 2 x USB 3.0 ports 1 x VGA port **Rear I/O Ports:** 2 x USB 3.0 ports 1 x VGA port 2 x RJ-45 GbE LAN ports 1 x RJ-45 Mgmt LAN port **Rear Switch/LED:** 1 x Power switch 1 x Q-Code/Port 80 LED 1 x Message LED 1 x Storage device LED 1 x Location LED **Front Switch/LED:** 1 x Power switch/LED 1 x Location switch/LED 1 x Message LED 1 x Storage device LED LAN 1-4 LEDs *** LAN 3-4 for Mezzanine card use**	**Rear I/O Ports:** 2 x USB 3.0 ports 1 x VGA port 2 x RJ-45 GbE LAN ports 1 x RJ-45 Mgmt LAN port **Rear Switch/LED:** 1 x Power switch 1 x Q-Code/Port 80 LED 1 x Message LED 1 x Storage device LED 1 x Location LED **Front Switch/LED:** 1 x Power switch/LED 1 x Location LED 1 x Message LED 1 x Storage device LED LAN 1-2 LED
Management Solution	Out of Band Remote Hardware	On-Board ASMB9-iKVM for KVM-over-IP	
	Software	ASUS Control Center (Classic)	
OS Support		Please find the latest OS support from http://www.asus.com/	

(continued on the next page)

Model Name	RS700A-E9-RS4	RS700A-E9-RS12
Regulatory Compliance	BSMI, CE, FCC (Class A)	
Dimension (Depth x Width x Height)	686 mm x 444 mm x 44 mm (1U) 27” x 17.48” x 1.73”	
Net Weight Kg (CPU, DRAM & storage device not included)	11.05 Kg	11.35 Kg
Gross Weight Kg (CPU, DRAM & storage device not included, packing included)	12.6 Kg	12.9 Kg
Power Supply (different configuration by region)	1+1 Redundant 800W 80 PLUS Platinum Power Supply Rating: 100-127Vac/200-240Vac, 9.4A/4.72A (x2), 50/60Hz Class I or 240Vdc, 4.6A (240Vdc only for China)	
Environment	Operating temperature: 10°C ~ 35°C Non operating temperature: -40°C ~ 60°C Non operating humidity: 20% ~ 90% (Non condensing)	

***Specifications are subject to change without notice.**

1.4 Front panel features

The barebone server displays a simple yet stylish front panel with easily accessible features. The power and reset buttons, LED indicators, slim type optical drive (optional on RS700A-E9-RS4 only), two USB ports (on RS700A-E9-RS4 only), and VGA port (on RS700A-E9-RS4 only) are located on the front panel.

Refer to section **1.7 LED information** for the LED descriptions.

RS700A-E9-RS4

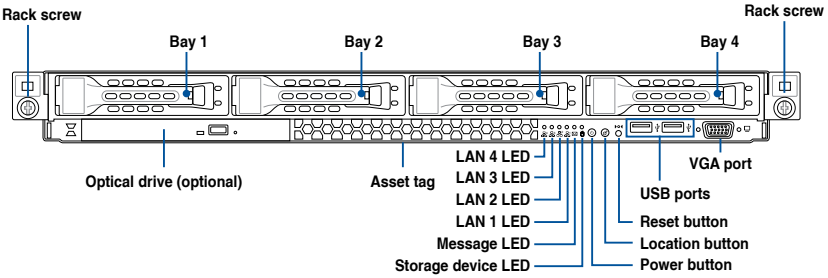

- All bays support SATA by default. SAS support requires optional ASUS PIKE II card.
- All bays support 3.5” and 2.5” drives with trays.

RS700A-E9-RS12

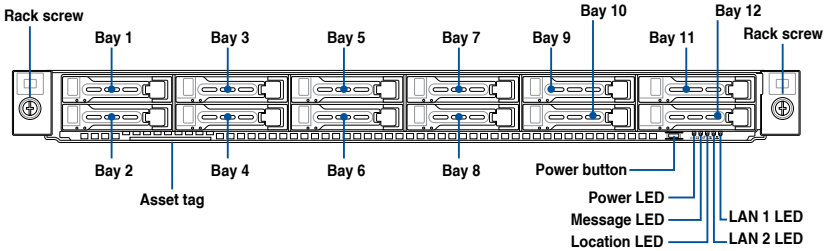

- Bay 1 to bay 4 supports SATA by default. SAS support requires optional ASUS PIKE II card.
- Bay 5 to bay 8 supports SATA by default. SAS support requires optional ASUS PIKE II card. NVMe support requires optional upgrade kit.
- Bay 9 to bay 12 supports SATA with optional cables. NVMe support requires optional upgrade kit.
- All bays support 2.5” drives with trays.

1.5 Rear panel features

The rear panel includes the expansion slots, system power sockets, and rear fans. The middle part includes the I/O shield with openings for the rear panel connectors on the motherboard.

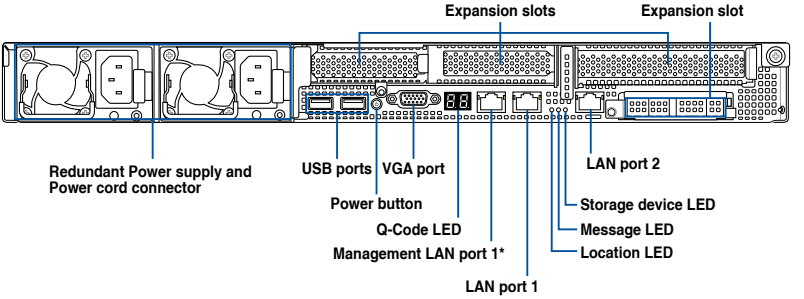

*This port is for ASUS ASMB9-iKVM only.

1.6 Internal features

The barebone server includes the basic components as shown.

RS700A-E9-RS4

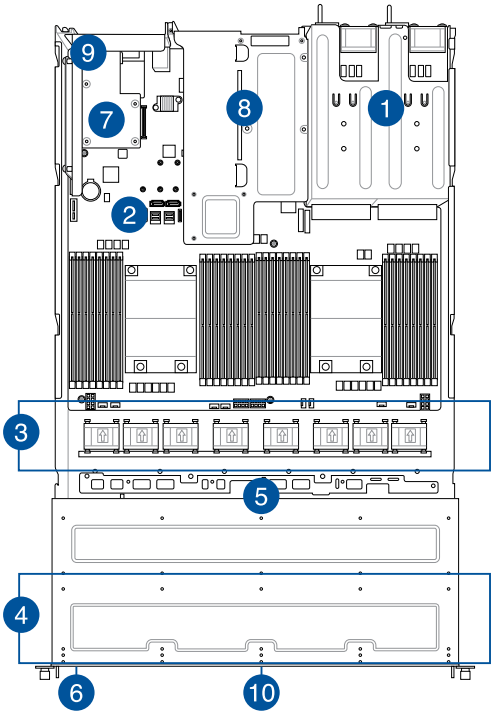

1. Redundant Power supply
2. ASUS KNPP-D32 Server Board
3. System fans
4. 4 x 3.5“ storage device trays
5. SATA/SAS backplane (hidden)
6. Slim type optical drive (hidden)
7. OCP Mezzanine card (optional)
8. Butterfly riser card (2 x Gen3 x8 link)
9. Riser card (Gen3 x16 link)
10. Asset tag (hidden)

The barebone server does not include a floppy disk drive. Connect a USB floppy disk drive to any of the USB ports on the front or rear panel if you need to use a floppy disk.

A protection film is pre-attached to the front cover before shipping. Please remove the protection film before turning on the system for proper heat dissipation.

WARNING
HAZARDOUS MOVING PARTS
KEEP FINGERS AND OTHER BODY PARTS AWAY

RS700A-E9-RS12

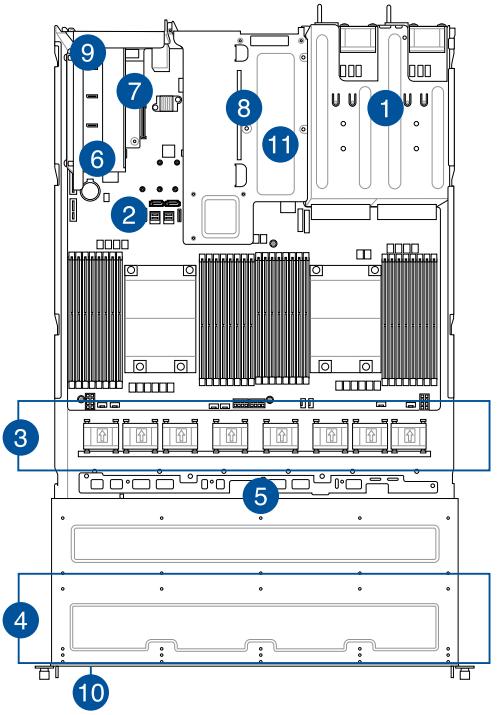

1. Redundant Power supply
2. ASUS KNPP-D32 Server Board
3. System fans
4. 12 x 2.5” storage device trays
5. SATA/SAS/NVMe backplane (hidden)
6. PCIe-NVME4-OCuLink card (optional)
7. OCP Mezzanine card (optional)
8. Butterfly riser card (2 x Gen3 x8 link)
9. Riser card (Gen3 x16 link)
10. Asset tag (hidden)
11. PCIe-NVME2-OCuLink card (hidden, optional on x8 slot (Gen3 x8 link) on butterfly riser card)

The barebone server does not include a floppy disk drive. Connect a USB floppy disk drive to any of the USB ports on the front or rear panel if you need to use a floppy disk.

A protection film is pre-attached to the front cover before shipping. Please remove the protection film before turning on the system for proper heat dissipation.

WARNING
HAZARDOUS MOVING PARTS
KEEP FINGERS AND OTHER BODY PARTS AWAY

1.7 LED information

1.7.1 Front panel LEDs

RS700A-E9-RS4

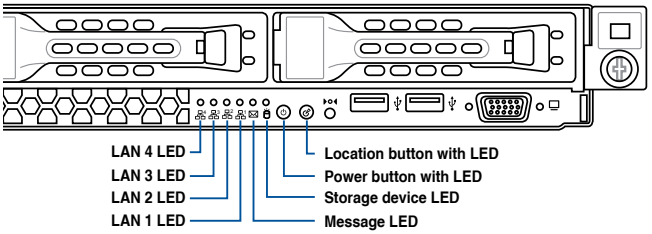

RS700A-E9-RS12

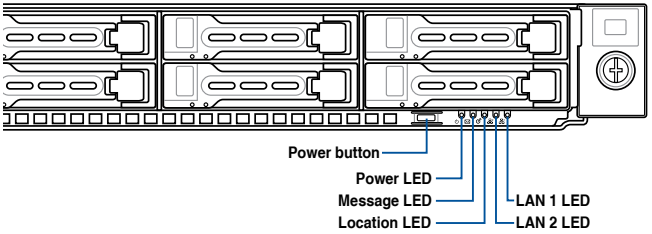

LED	Icon	Display status	Description
Power LED		ON	System power ON
Storage Device Access LED		OFF Blinking	No activity Read/write data into the storage device (Does not support storage devices connected to the onboard SATA)
Message LED		OFF ON	System is normal; no incoming event A hardware monitor event is indicated
Location LED		OFF ON	Normal status Location switch is pressed (Press the location switch again to turn off)
LAN LEDs		OFF Blinking ON	No LAN connection LAN is transmitting or receiving data LAN connection is present

1.7.2 Storage device status LED

RS700A-E9-RS4

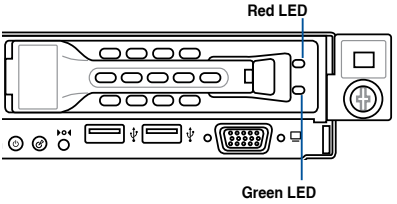

RS700A-E9-RS12

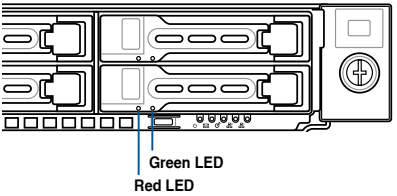

SATA/SAS Storage Device LED Description		
GREEN	ON	SATA/SAS storage device power ON
RED	ON	Storage device has failed and should be swapped immediately (for PIKE storage)
GREEN/ RED	Blinking	RAID rebuilding (for PIKE storage)
GREEN/ RED	Blinking	Locate (for PIKE storage)
GREEN/ RED	OFF	Storage device not found
GREEN	Blinking	Read/write data from/into the SATA/SAS storage device

1.7.3 LAN (RJ-45) LEDs

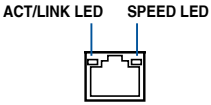

ACT/LINK LED		SPEED LED	
Status	Description	Status	Description
OFF	No link	OFF	10 Mbps connection
GREEN	Linked	ORANGE	100 Mbps connection
BLINKING	Data activity	GREEN	1 Gbps connection

1.7.4 Rear panel LEDs

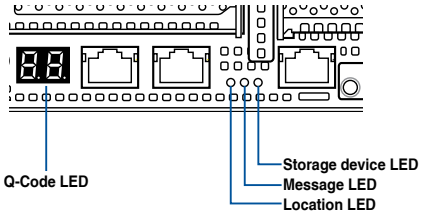

LED	Display status	Description
Storage device Access LED	OFF Blinking	No activity Read/write data into the storage device (Does not support storage devices connected to the onboard SATA)
Message LED	OFF ON	System is normal; no incoming event A hardware monitor event is indicated
Location LED	OFF ON	Normal status Location switch is pressed (Press the location switch again to turn off)

1.7.5 Q-Code table

Action	PHASE	POST CODE	TYPE	DESCRIPTION
SEC Start up	Security Phase	0x01	Progress	First post code
		0x02	Progress	Load BSP microcode
		0x03	Progress	Perform early platform Initialization
		0x04	Progress	Set cache as ram for PEI phase
		0x05	Progress	Establish Stack
		0x06	Progress	CPU Early Initialization
PSP Boot	PSP Boot Loader phase (Error Post Codes)	0x00	Error	General - Success
		0x01	Error	Generic Error Code
		0x02	Error	Generic Memory Error
		0x03	Error	Buffer Overflow
		0x04	Error	Invalid Parameter(s)
		0x05	Error	Invalid Data Length
		0x06	Error	Data Alignment Error
		0x07	Error	Null Pointer Error
		0x08	Error	Unsupported Function
		0x09	Error	Invalid Service ID
		0x0A	Error	Invalid Address
		0x0B	Error	Out of Resource Error
		0x0C	Error	Timeout
		0x0D	Error	data abort exception
		0x0E	Error	prefetch abort exception
		0x0F	Error	Out of Boundary Condition Reached
		0x10	Error	Data corruption
		0x11	Error	Invalid command
		0x12	Error	The package type provided by BR is incorrect
		0x13	Error	Failed to retrieve FW header during FW validation
		0x14	Error	Key size not supported
		0x15	Error	Agesa0 verification error
		0x16	Error	SMU FW verification error
		0x17	Error	OEM SINGING KEY verification error
		0x18	Error	Generic FW Validation error
		0x19	Error	RSA operation fail - bootloader
		0x1A	Error	CCP Passthrough operation failed - internal status
		0x1B	Error	AES operation fail
		0x1C	Error	CCP state save failed
		0x1D	Error	CCP state restore failed
		0x1E	Error	SHA256 operation fail - internal status
		0x1F	Error	ZLib Decompression operation fail
		0x20	Error	HMAC-SHA256 operation fail - internal status
		0x21	Error	Booted from boot source not recognized by PSP
		0x22	Error	PSP directory entry not found
		0x23	Error	PSP failed to set the write enable latch
		0x24	Error	PSP timed out because spirom took too long
		0x25	Error	Cannot find BIOS directory
		0x26	Error	SpiRom is not valid
		0x27	Error	slave die has different security state from master
		0x28	Error	SMI interface init failure
		0x29	Error	SMI interface generic error
		0x2A	Error	invalid die ID executes MCM related function
		0x2B	Error	invalid MCM configuration table read from bootrom
		0x2C	Error	Valid boot mode wasn't detected
		0x2D	Error	NVStorage init failure
		0x2E	Error	NVStorage generic error
		0x2F	Error	MCM 'error' to indicate slave has more data to send
		0x30	Error	MCM error if data size exceeds 32B
		0x31	Error	Invalid client id for SVC MCM call
		0x32	Error	MCM slave status register contains bad bits
		0x33	Error	MCM call was made in a single die environment
		0x34	Error	PSP secure mapped to invalid segment (should be 0x400_0000)
		0x35	Error	No physical x86 cores were found on die
		0x36	Error	Insufficient space for secure OS (range of free SRAM to SVC stack base)
		0x37	Error	SYSHUB mapping memory target type is not supported
		0x38	Error	Attempt to unmap permanently mapped TLB to PSP secure region

(continued on the next page)

Action	PHASE	POST CODE	TYPE	DESCRIPTION
PSP Boot	PSP Boot Loader phase (Error Post Codes)	0x39	Error	Unable to map an SMN address to AXI space
		0x3A	Error	Unable to map a SYSHUB address to AXI space
		0x3B	Error	The count of CCXs or cores provided by bootrom is not consistent
		0x3C	Error	Uncompressed image size doesn't match value in compressed header
		0x3D	Error	Compressed option used in case where not supported
		0x3E	Error	Fuse info on all dies don't match
		0x3F	Error	PSP sent message to SMU; SMU reported an error
		0x40	Error	Function RunPostX86ReleaseUnitTests failed in memcmp()
		0x41	Error	Interface between PSP to SMU not available.
		0x42	Error	Timer wait parameter too large
		0x43	Error	Test harness module reported an error
		0x44	Error	x86 wrote C2PMSG_0 interrupting PSP
		0x45	Error	A write to an L3 register failed
		0x46	Error	Mini-BL
		0x47	Error	Mini-BL CCP HMAC Unit-test failed
		0x48	Error	Potential stack corruption in jump to Mini BL
		0x49	Error	Error in Validate and Loading AGESA APOB SVC call
		0x4A	Error	Correct fuse bits for DIAG_BL loading not set
		0x4B	Error	The UmcProgramKeys() function was not called by AGESA
		0x4C	Error	Secure unlock error
		0x4D	Error	Syshub register programming mismatch during readback
		0x4E	Error	Family ID in MP0_SFUSE_SEC[7:3] not correct
		0x4F	Error	An operation was invoked that can only be performed by the GM
		0x50	Error	Failed to acquire host controller semaphore to claim ownership of SMB
		0x51	Error	Timed out waiting for host to complete pending transactions
		0x52	Error	Timed out waiting for slave to complete pending transactions
		0x53	Error	Unable to kill current transaction on host
		0x54	Error	One of: Illegal command
		0x55	Error	An SMBus transaction collision detected
		0x56	Error	Transaction failed to be started or processed by host
		0x57	Error	An unsolicited SMBus interrupt was received
		0x58	Error	An attempt to send an unsupported PSP-SMU message was made
		0x59	Error	An error/data corruption detected on response from SMU for sent msg
		0x5A	Error	MCM Steady-state unit test failed
		0x5B	Error	S3 Enter failed
		0x5C	Error	AGESA BL did not set PSP SMU reserved addresses via SVC call
		0x5E	Error	CcxSecBisiEn not set in fuse RAM
		0x5F	Error	Received an unexpected result
		0x60	Error	VMG Storage Init failed
		0x61	Error	Failure in mbedTLS user app
		0x62	Error	An error occured whilst attempting to SMN map a fuse register
		0x63	Error	Fuse burn sequence/operation failed due to internal SOC error
		0x64	Error	Fuse sense operation timed out
		0x65	Error	Fuse burn sequence/operation timed out waiting for burn done
		0x66	Error	Failure status indicating that the given SecureOS has been
		0x67	Error	This PSP FW was revoked
		0x68	Error	The platform model/vendor id fuse is not matching the BIOS public key token
		0x69	Error	The BIOS OEM public key of the BIOS was revoked for this platform
		0x6A	Error	PSP level 2 directory not match expected value.
		0x6B	Error	BIOS level 2 directory not match expected value.
		0x6C	Error	HVB validation failure for BIOS RTM volume (OEM public/signature failed to validate).
		0x6D	Error	Generic error indicating the CCP HAL initialization failed
		0x94	Error	Knoll failed to idle correctly after being reset
		0x95	Error	Bad status returned by I2CKnollCheck
		0x96	Error	NACK to general call (no device on Knoll I2C bus)
		0x97	Error	Null pointer passed to I2CKnollCheck
		0x98	Error	Invalid device-ID found during Knoll authentication
		0x99	Error	Error during Knoll/Prom key derivation
		0x9A	Error	Null pointer passed to Crypto function
		0x9B	Error	Error in checksum from wrapped Knoll/Prom keys
		0x9C	Error	Knoll returned an invalid response to a command
		0x9D	Error	Bootloader failed in Knoll Send Command function
		0x9E	Error	No Knoll device found by verifying MAC

(continued on the next page)

Action	PHASE	POST CODE	TYPE	DESCRIPTION
PSP Boot	PSP Boot Loader phase (Status Post Codes)	0xA0	Progress	Bootloader successfully entered C Main
		0xA1	Progress	Master initialized C2P / slave waited for master to init C2P
		0xA2	Progress	HMAC key successfully derived
		0xA3	Progress	Master got Boot Mode and sent boot mode to all slaves
		0xA4	Progress	SpiRom successfully initialized
		0xA5	Progress	BIOS Directory successfully read from SPI to SRAM
		0xA6	Progress	Early unlock check
		0xA7	Progress	Inline Aes key successfully derived
		0xA8	Progress	Inline-AES key programming is done
		0xA9	Progress	Inline-AES key wrapper derivation is done
		0xAA	Progress	Bootloader successfully loaded HW IP configuration values
		0xAB	Progress	Bootloader successfully programmed MBAT table
		0xAC	Progress	Bootloader successfully loaded SMU FW
		0xAD	Progress	PSP and SMU configured WAFL
		0xAE	Progress	User mode test harness completed successfully
		0xAF	Progress	Bootloader loaded Agesa0 from SpiRom
		0xB0	Progress	AGESA phase has completed
		0xB1	Progress	RunPostDramTrainingTests() completed successfully
		0xB2	Progress	SMU FW Successfully loaded to SMU Secure DRAM
		0xB3	Progress	Sent all required boot time messages to SMU
		0xB4	Progress	Validated and ran Security Gasket binary
		0xB5	Progress	UMC Keys generated and programmed
		0xB6	Progress	Inline AES key wrapper stored in DRAM
		0xB7	Progress	Completed FW Validation step
		0xB8	Progress	Completed FW Validation step
		0xB9	Progress	BIOS copy from SPI to DRAM complete
		0xBA	Progress	Completed FW Validation step
		0xBB	Progress	BIOS load process fully complete
		0xBC	Progress	Bootloader successfully release x86
		0xBD	Progress	Early Secure Debug completed
		0xBE	Progress	GetFWVersion command received from BIOS is completed
		0xBF	Progress	SMIInfo command received from BIOS is completed
		0xC0	Progress	Successfully entered WarmBootResume()
		0xC1	Progress	Successfully copied SecureOS image to SRAM
		0xC2	Progress	Successfully copied trustlets to PSP Secure Memory
		0xC3	Progress	About to jump to Secure OS (SBL about to copy and jump)
		0xC4	Progress	Successfully restored CCP and UMC state on S3 resume
		0xC5	Progress	PSP SRAM HMAC validated by Mini BL
		0xC6	Progress	About to jump to <t-base in Mini BL
		0xC7	Progress	VMG ECDH unit test started
		0xC8	Progress	VMG ECDH unit test passed
		0xC9	Progress	VMG ECC CDH primitive unit test started
		0xCA	Progress	VMG ECC CDH primitive unit test passed
		0xCB	Progress	VMG SP800-108 KDF-CTR HMAC unit test started
		0xCC	Progress	VMG SP800-108 KDF-CTR HMAC unit test passed
		0xCD	Progress	VMG LAUNCH_* test started
		0xCE	Progress	VMG LAUNCH_* test passed
		0xCF	Progress	MP1 has been taken out of reset
		0xD0	Progress	PSP and SMU Reserved Addresses correct
		0xD1	Progress	Reached Naples steady-state WFI loop
		0xD2	Progress	Knoll device successfully initialized
		0xD3	Progress	32-byte RandOut successfully returned from Knoll
		0xD4	Progress	32-byte MAC successfully received from Knoll.
		0xD5	Progress	Knoll device verified successfully
		0xD6	Progress	Done enabling power for Knoll
		0xD7	Progress	Enter recovery mode due to trustlet validation fail.
		0xD8	Progress	Enter recovery mode due to OS validation fail.
		0xD9	Progress	Enter recovery mode due to OEM public key not found.

(continued on the next page)

Action	PHASE	POST CODE	TYPE	DESCRIPTION
Quick VGA	PEI(Pre-EFI Initialization) phase	0x10	Progress	PEI Core Entry
		0x11	Progress	PEI cache as ram CPU initial
		0x15	Progress	NB Initialization before installed memory
		0x19	Progress	SB Initialization before installed memory
	DXE(Driver Execution Environment) phase	0x32	Progress	CPU POST-Memory Initialization
		0x33	Progress	CPU Cache Initialization
		0x34	Progress	Application Processor(s) (AP) Initialization
		0x35	Progress	BSP Selection
		0x36	Progress	CPU Initialization
		0x37	Progress	Pre-memory NB Initialization
		0x3B	Progress	Pre-memory SB Initialization
		0x4F	Progress	DXE Initial Program Load(IPL)
		0x60	Progress	DXE Core Started
		0x61	Progress	DXE NVRAM Initialization
		0x62	Progress	SB run-time Initialization
		0x63	Progress	CPU DXE Initialization
		0x68	Progress	PCI HB Initialization
		0x69	Progress	NB DXE Initialization
		0x6A	Progress	NB DXE SMM Initialization
		0x70	Progress	SB DXE Initialization
		0x71	Progress	SB DXE SMM Initialization
		0x72	Progress	SB DEVICES Initialization
		0x78	Progress	ACPI Module Initialization
		0x79	Progress	CSM Initialization
		0xD0	Progress	CPU PM Structure Initialization
Normal boot	BDS(Boot Device Selection) phase	0x90	Progress	BDS started
		0x91	Progress	Connect device event
		0x92	Progress	PCI Bus Enumeration
		0x93	Progress	PCI Bus Enumeration
		0x94	Progress	PCI Bus Enumeration
		0x95	Progress	PCI Bus Enumeration
		0x96	Progress	PCI Bus Enumeration
		0x97	Progress	Console outout connect event
		0x98	Progress	Console input connect event
		0x99	Progress	AMI Super IO start
		0x9A	Progress	AMI USB Driver Initialization
		0x9B	Progress	AMI USB Driver Initialization
		0x9C	Progress	AMI USB Driver Initialization
		0x9D	Progress	AMI USB Driver Initialization
		0xb2	Progress	Legacy Option ROM Initialization
		0xb3	Progress	Reset system
		0xb4	Progress	USB hotplug
		0xb6	Progress	NVRAM clean up
		0xb7	Progress	NVRAM configuration reset
		0xA0	Progress	IDE, AHCI Initialization
		0xA1	Progress	IDE, AHCI Initialization
		0xA2	Progress	IDE, AHCI Initialization
		0xA3	Progress	IDE, AHCI Initialization
		0x00~0xFF	Progress	Wait BMC ready
		0xA8	Progress	BIOS Setup Utility password verify
		0xA9	Progress	BIOS Setup Utility start
		0xAB	Progress	BIOS Setup Utility input wait
		0xAD	Progress	Ready to boot event
		0xAE	Progress	Legacy boot event
	Operating system phase	0xAA	Progress	APIC mode
		0xAC	Progress	PIC mode

Hardware Information

2

This chapter lists the hardware setup procedures that you have to perform when installing or removing system components.

2.1 Chassis cover

To remove the rear cover:

1. Remove the two (2) screws on both sides of the cover with a Phillips screwdriver.

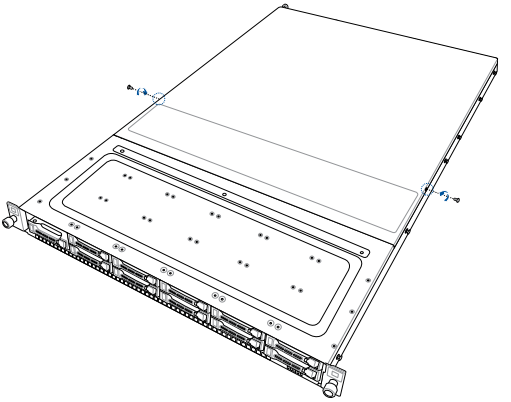

2. Loosen the thumbscrew on the rear panel to release the cover from the chassis.

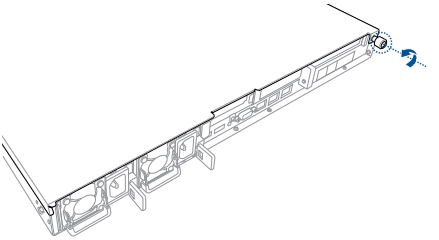

3. Firmly hold the cover and slide it towards the rear panel for about half an inch until it is disengaged from the chassis.
4. Lift the cover from the chassis.

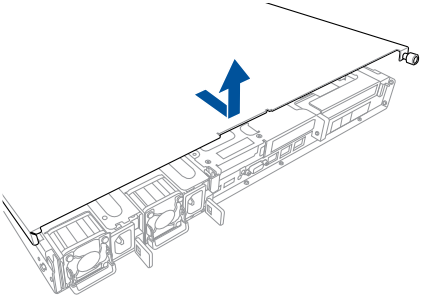

2.2 Central Processing Unit (CPU)

The motherboard comes with a surface mount Socket SP3 designed for the AMD EPYC™ 7000 Series.

- Upon purchase of the motherboard, ensure that the PnP cap is on the socket and the socket contacts are not bent. Contact your retailer immediately if the PnP cap is missing, or if you see any damage to the PnP cap/socket contacts/motherboard components. ASUS will shoulder the cost of repair only if the damage is shipment/transit-related.
- Keep the cap after installing the motherboard. ASUS will process Return Merchandise Authorization (RMA) requests only if the motherboard comes with the cap on the Socket SP3.
- The product warranty does not cover damage to the socket contacts resulting from incorrect CPU installation/removal, or misplacement/loss/incorrect removal of the PnP cap.

2.2.1 Installing the CPU and heatsink

To install the CPU and heatsink:

1. Remove the rear cover. For more information, see the section **Chassis cover**.
2. Remove the air ducts.

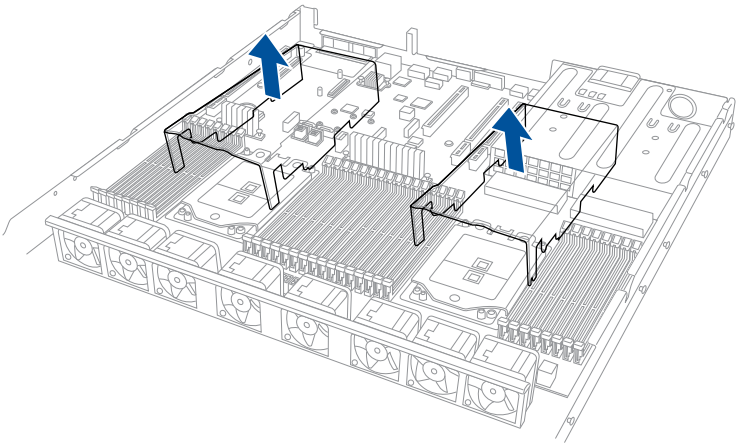

3. Loosen each screw one by one in the sequence shown on the socket to open the load plate.

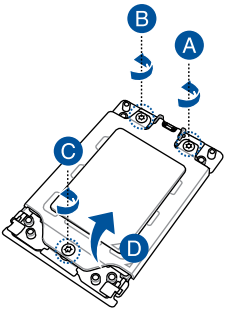

4. Slightly lift open the rail frame.

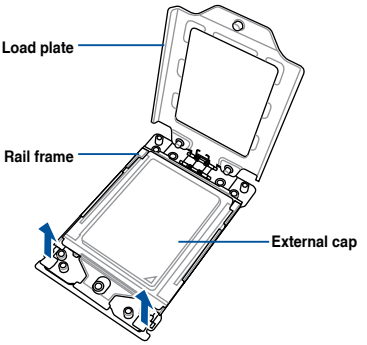

5. Slide the external cap out of the rail frame.

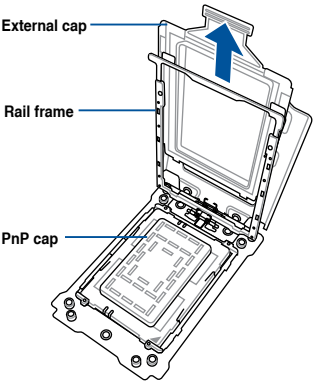

6. Slide the carrier frame with CPU into the rail frame, then remove the PnP cap.

The carrier frame with CPU fits in only one correct orientation. DO NOT force the carrier frame with CPU into the rail frame.

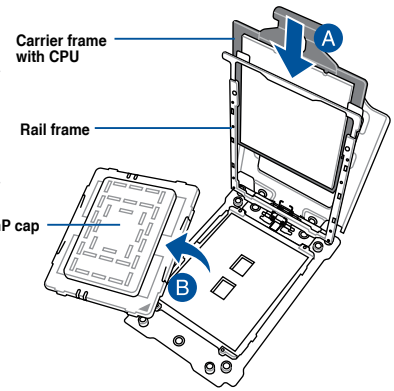

7. Gently push the rail frame just enough to let it sit on top of the CPU socket.

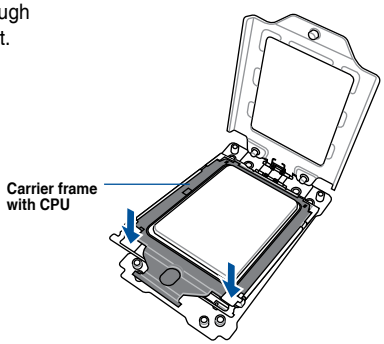

8. Close the load plate just enough to let it sit on top of the CPU, then secure each screw one by one in the sequence shown on the socket to completely secure the load plate.

The load plate screws are T20 models. A torque value of 16.1±1.2 kgf-cm (14.0±1.0 lbf-in) is recommended.

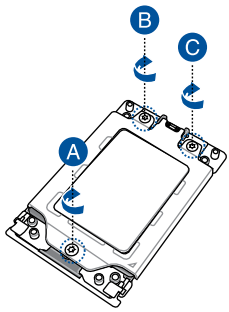

9. Twist each of the four screws with a screwdriver just enough to attach the heatsink to the motherboard. When the four screws are attached, tighten them one by one in the sequence shown in the illustration to completely secure the heatsink.

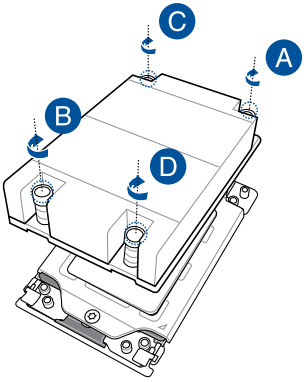

The heatsink screws are T20 models. A torque value of 16.1±1.2 kgf-cm (14.0±1.0 lbf-in) is recommended.

10. Reinstall the air ducts to complete the CPU and heatsink installation.

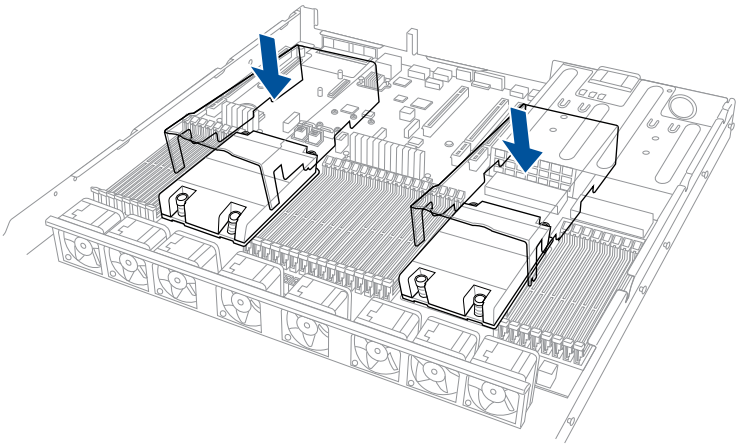

2.3 System memory

2.3.1 Overview

The motherboard comes with 32 Double Data Rate 4 (DDR4) Dual Inline Memory Modules (DIMM) sockets.

The figure illustrates the location of the DDR4 DIMM sockets:

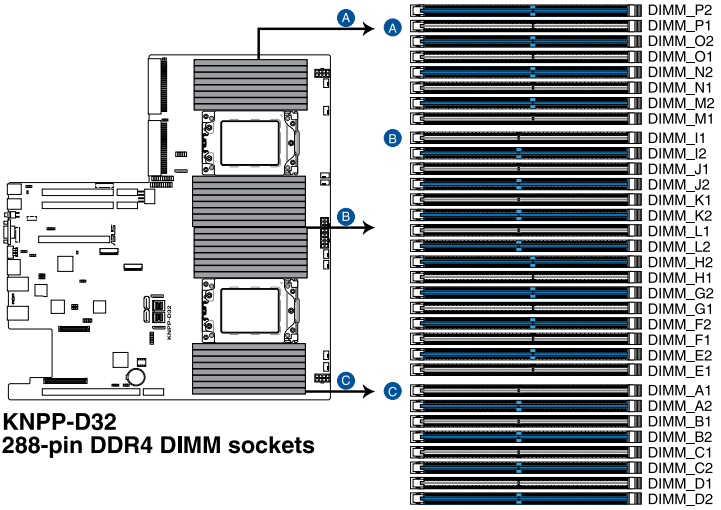

KNPP-D32
288-pin DDR4 DIMM sockets

2.3.2 Memory Configurations

You may install 8GB, 16GB, and 32GB RDIMMs; 32GB, 64GB, and 128GB LRDIMMs into the DIMM sockets. If you are not sure on which slots to install the DIMMS, you can use the recommended memory configuration in this section for reference.

- Refer to ASUS Server AVL for the updated list of compatible DIMMs.
- Always install DIMMs with the same CAS latency. For optimum compatibility, it is recommended that you obtain memory modules from the same vendor.
- Start installing the DIMMs into the second slots (such as DIMM_A2, DIMM_B2, etc.)

Recommended dual CPU configuration						
	DIMMs					
	2	4	8	12	16	32
DIMM_P2					•	•
DIMM_P1						•
DIMM_O2				•	•	•
DIMM_O1						•
DIMM_N2			•	•	•	•
DIMM_N1						•
DIMM_M2		•	•	•	•	•
DIMM_M1						•
DIMM_I1						•
DIMM_I2	•	•	•	•	•	•
DIMM_J1						•
DIMM_J2			•	•	•	•
DIMM_K1						•
DIMM_K2				•	•	•
DIMM_L1						•
DIMM_L2					•	•
DIMM_H2					•	•
DIMM_H1						•
DIMM_G2				•	•	•
DIMM_G1						•
DIMM_F2			•	•	•	•
DIMM_F1						•
DIMM_E2		•	•	•	•	•
DIMM_E1						•
DIMM_A1						•
DIMM_A2	•	•	•	•	•	•
DIMM_B1						•
DIMM_B2			•	•	•	•
DIMM_C1						•
DIMM_C2				•	•	•
DIMM_D1						•
DIMM_D2					•	•

2.3.3 Installing a DIMM on a single clip DIMM socket

Ensure to unplug the power supply before adding or removing DIMMs or other system components. Failure to do so may cause severe damage to both the motherboard and the components.

1. Unlock a DIMM socket by pressing the retaining clip outward.
2. Align a DIMM on the socket such that the notch on the DIMM matches the DIMM slot key on the socket.

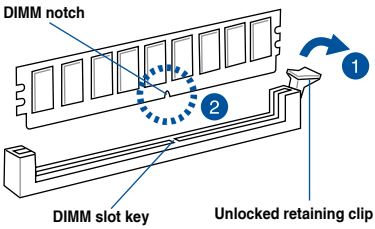

A DIMM is keyed with a notch so that it fits in only one direction. DO NOT force a DIMM into a socket in the wrong direction to avoid damaging the DIMM.

3. Hold the DIMM by both of its ends then insert the DIMM vertically into the socket. Apply force to both ends of the DIMM simultaneously until the retaining clip snaps back into place and the DIMM cannot be pushed in any further to ensure proper sitting of the DIMM.

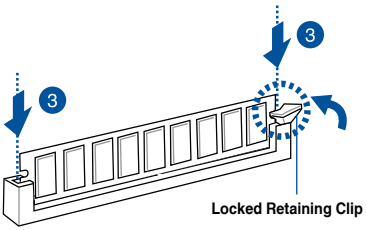

Always insert the DIMM into the socket vertically to prevent DIMM notch damage.

2.3.4 Removing a DIMM from a single clip DIMM socket

1. Press the retaining clip outward to unlock the DIMM.
2. Remove the DIMM from the socket.

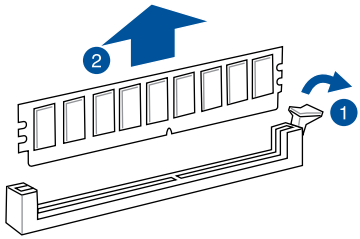

Support the DIMM lightly with your fingers when pressing the retaining clips. The DIMM might get damaged when it flips out with extra force.

2.4 Storage devices

RS700A-E9-RS4

The system supports four (4) 2.5” or 3.5” hot-swap SATA/SAS storage devices. The storage device installed on the storage device tray connects to the motherboard SATA/SAS ports via the SATA/SAS backplane (SAS support requires optional ASUS PIKE II card.).

To install a 3.5” hot-swap SATA/SAS storage device:

1. Push the spring lock to the right (A) then pull the tray lever outward (B) to release the storage device tray. The storage device tray ejects slightly after you pull out the lever.

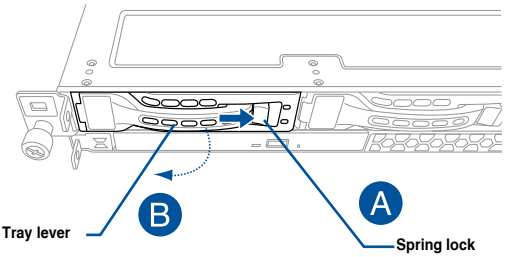

2. Firmly hold the tray lever and pull the storage device tray out of the bay.

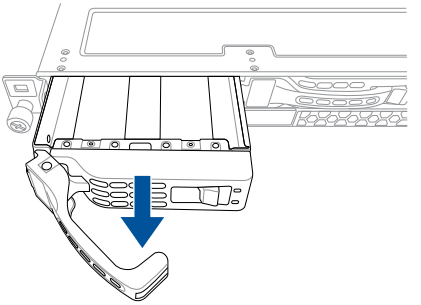

3. Place the storage device tray on a flat and stable surface.
4. Prepare the SATA/SAS storage device and the bundled set of screws.

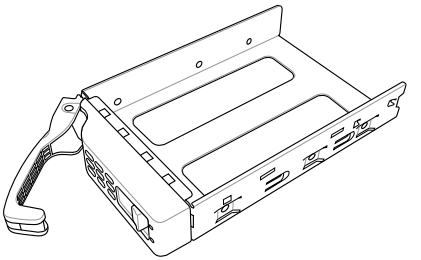

5. Place the SATA/SAS storage device into the storage device tray then secure it with four screws.

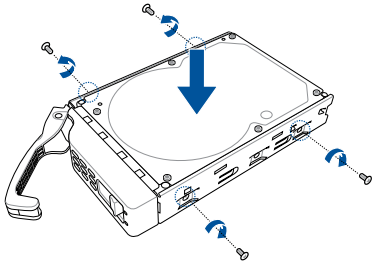

6. Insert the storage device tray and storage device assembly all the way into the depth of the bay until just a small fraction of the tray edge protrudes.

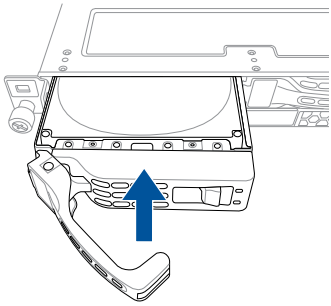

When installed, the SATA/SAS connector on the storage device connects to the SATA/SAS interface on the backplane.

7. Push the tray lever until it clicks and secures the storage device tray in place.

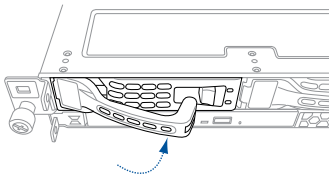

The storage device tray is correctly placed when its front edge aligns with the bay edge.

8. Repeat steps 1 to 7 to install the other SATA/SAS storage devices.

To install a 2.5” hot-swap SATA/SAS storage device:

1. Push the spring lock to the right (A) then pull the tray lever outward (B) to release the storage device tray. The storage device tray ejects slightly after you pull out the lever.

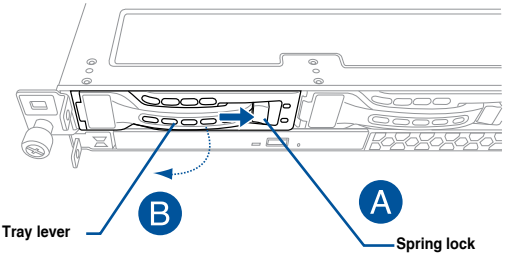

2. Firmly hold the tray lever and pull the storage device tray out of the bay.

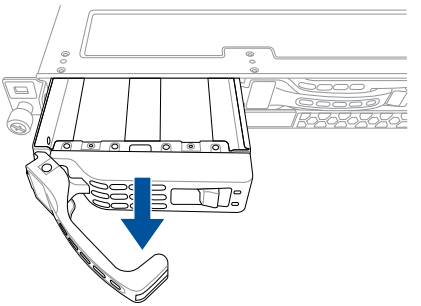

3. Place the storage device tray on a flat and stable surface.
4. Prepare the SATA/SAS storage device and the bundled set of screws.

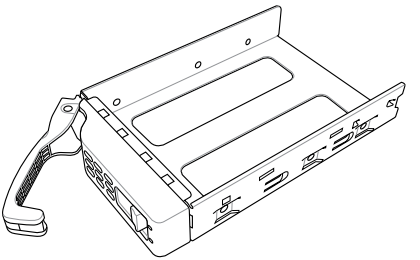

5. Place the SATA/SAS storage device into the storage device tray then secure it with four screws.

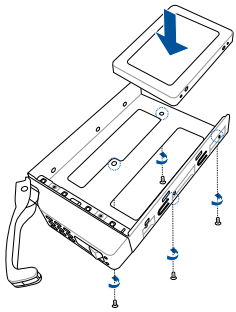

6. Insert the storage device tray and storage device assembly all the way into the depth of the bay until just a small fraction of the tray edge protrudes.

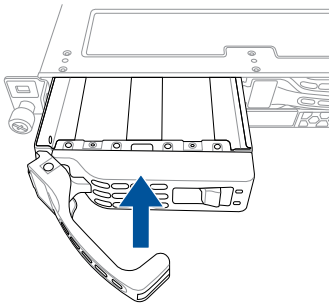

When installed, the SATA/SAS connector on the storage device connects to the SATA/SAS interface on the backplane.

7. Push the tray lever until it clicks and secures the storage device tray in place.

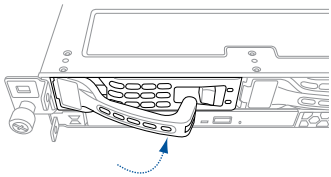

The storage device tray is correctly placed when its front edge aligns with the bay edge.

8. Repeat steps 1 to 7 to install the other SATA/SAS storage devices.

RS700A-E9-RS12

The system supports twelve (12) 2.5” hot-swap SATA/SAS/NVMe storage devices (up to 4 x NVMe/SATA + 4 x NVMe/SAS/SATA + 4 x SAS/SATA). The storage device installed on the storage device tray connects to the motherboard SATA/SAS/NVMe ports via the SATA/SAS/NVMe backplane.

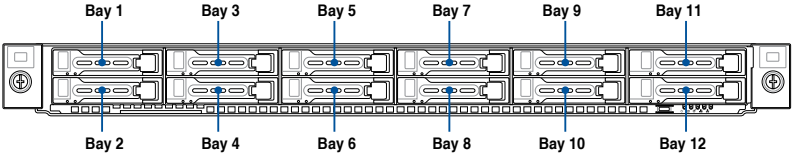

- Bay 1 to bay 4 supports SATA by default. SAS support requires optional ASUS PIKE II card.
- Bay 5 to bay 8 supports SATA by default. SAS support requires optional ASUS PIKE II card. NVMe support requires optional upgrade kit.
- Bay 9 to bay 12 supports SATA with optional cables. NVMe support requires optional upgrade kit.
- All bays support 2.5” drives with trays.

To install a 2.5” hot-swap SATA/SAS/NVMe storage device:

1. Push the spring lock to the right (A) then pull the tray lever outward (B) to release the storage device tray. The storage device tray ejects slightly after you pull out the lever.

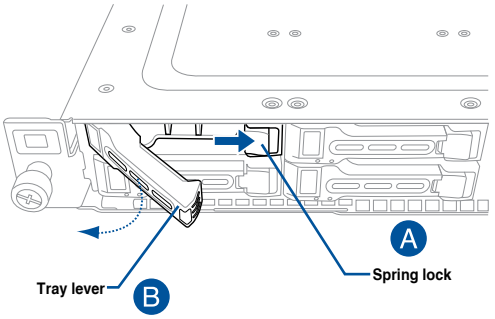

2. Firmly hold the tray lever and pull the storage device tray out of the bay.

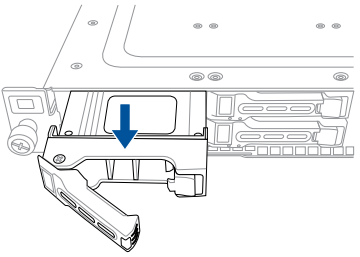

3. Place the storage device tray on a flat and stable surface.
4. Prepare the SATA/SAS/NVMe storage device and the bundled set of screws.

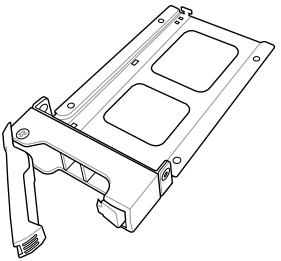

5. Place the SATA/SAS/NVMe storage device into the storage device tray then secure it with four screws.

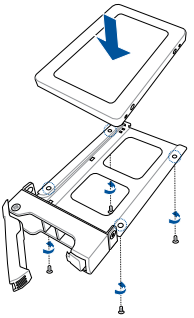

6. Insert the storage device tray and storage device assembly all the way into the depth of the bay until just a small fraction of the tray edge protrudes.

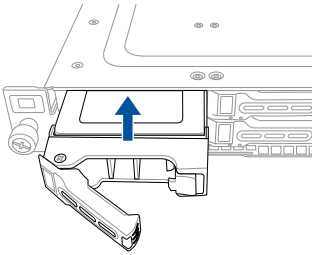

When installed, the SATA/SAS/NVMe connector on the storage device connects to the SATA/SAS/NVMe interface on the backplane.

7. Push the tray lever until it clicks and secures the storage device tray in place.

The storage device tray is correctly placed when its front edge aligns with the bay edge.

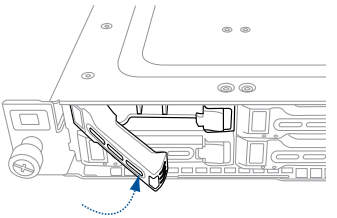

8. Repeat steps 1 to 7 to install the other SATA/SAS/NVMe storage devices.

2.5 Expansion slot

The barebone server comes with two PCIe slots - PCIe1 and PCIe2. These slots are pre-installed with a riser card bracket and a butterfly riser card bracket for installing PCIe expansion cards. You need to remove these expansion card brackets if you want to install PCIe expansion cards.

2.5.1 Installing an expansion card to the riser card bracket

The pre-installed riser card bracket on the PCIe1 slot supports Full-Height (FH) and Half-Length (HL) PCIe x16 expansion cards.

To install a PCIe x16 (Gen3 x16 link) FH or HL card on the riser card bracket:

1. Firmly hold the riser card bracket, then pull it up to detach it from the PCIe x24 slot on the motherboard.

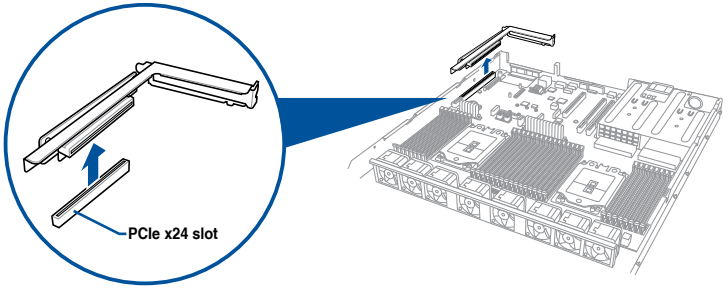

2. Remove the screw from the metal cover (A), then remove the metal cover (B) from the riser card bracket.

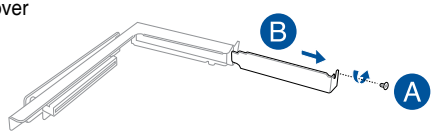

3. Install the PCIe expansion card into the riser card bracket (A), then secure the expansion card with the screw (B).

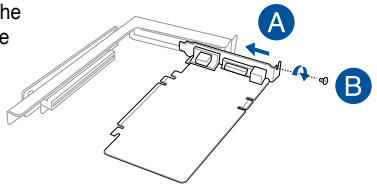

4. Install the riser card bracket and the PCIe expansion card assembly into the PCIe connector on the motherboard. Ensure that the golden connectors of the riser card bracket is firmly seated in place.

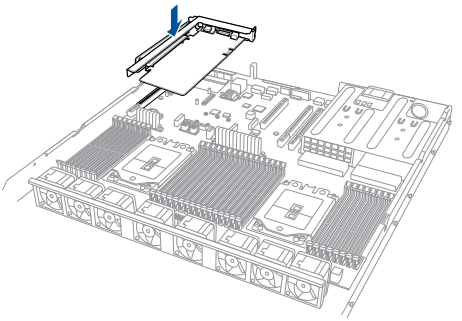

2.5.2 Installing an expansion card to the butterfly riser card bracket

The pre-installed butterfly riser card bracket on the PCIe2 slot has one PCIe x8 slot and one PCIe x16 slot. Although the PCIe x16 slot is physically longer than the PCIe x8 slot, both of these slots provides x8 Gen3 links.

The PCIe x8 slot supports proprietary cards such as ASUS PIKE II series cards. Install your proprietary cards into this slot to maximize its use.

To install PCIe x8 (Gen3 x8 link), proprietary cards to the butterfly riser card bracket:

1. Remove the screw that secures the butterfly riser card bracket to the chassis.

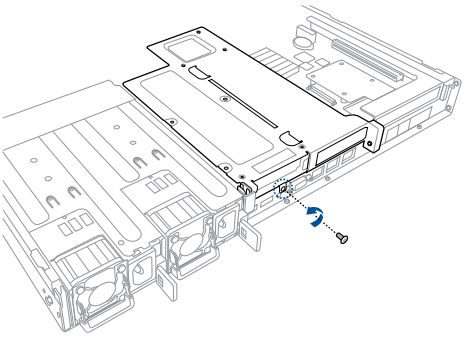

2. Firmly hold the butterfly riser card bracket, then pull it up to detach it from the PCIe x16 slot on the motherboard.

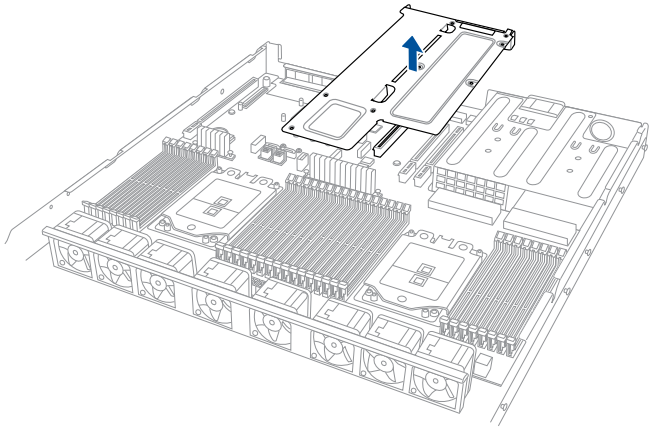

3. Place the butterfly riser card bracket on a flat and stable surface.

4. Remove the screws from the metal covers (A), then remove the metal covers (B) from the butterfly riser card bracket.

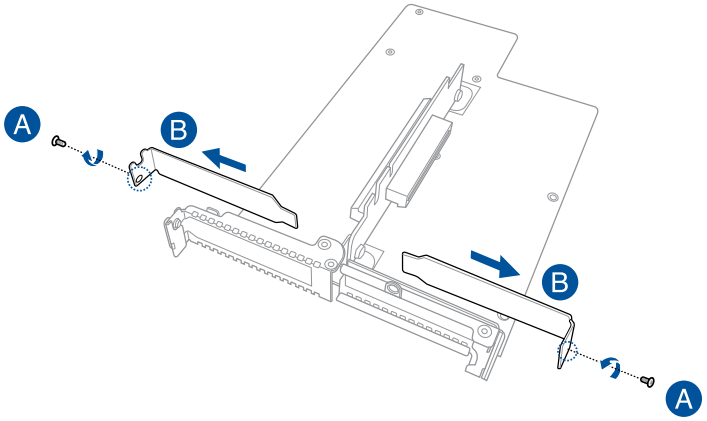

5. Install the PCIe expansion cards into the butterfly riser card bracket (A), then secure the expansion cards with the screws (B).

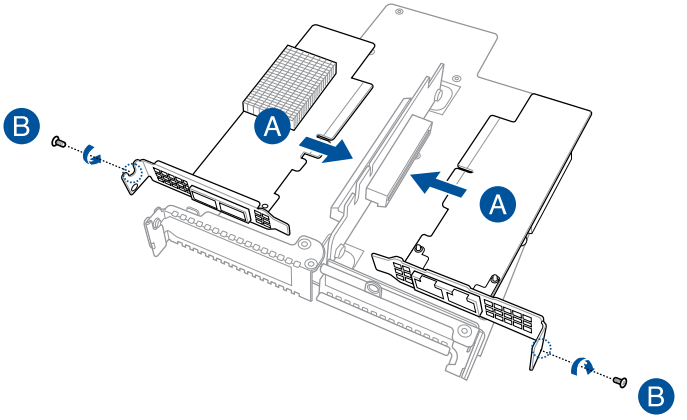

6. Reinstall the butterfly riser card bracket and the PCIe expansion card assembly into the PCIe connector on the motherboard (A) and secure it with the screw (B). Ensure that the golden connectors of the butterfly riser card bracket is firmly seated in place.

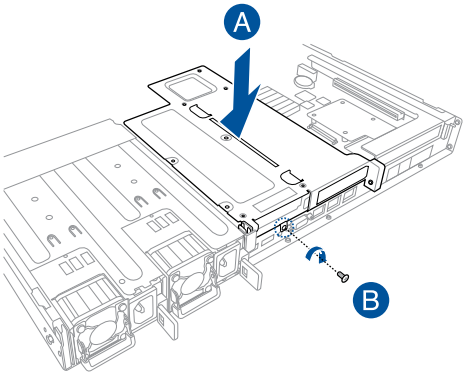

2.5.3 Installing an ASUS PIKE II card

You can install an additional ASUS PIKE II card to support SAS storage devices in your server system.

RS700A-E9-RS4

1. Prepare the ASUS PIKE II card.

If your expansion card is pre-installed with a proprietary card bracket, proceed to step 4.

2. Remove the two screws on the ASUS PIKE II card (A), then remove the card bracket (B).

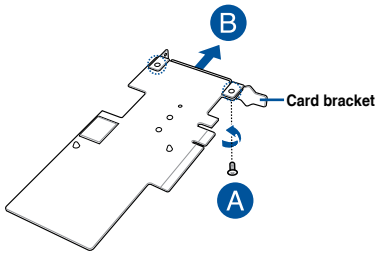

3. Secure the ASUS PIKE II card and the metal cover (proprietary card bracket) with the two screws.

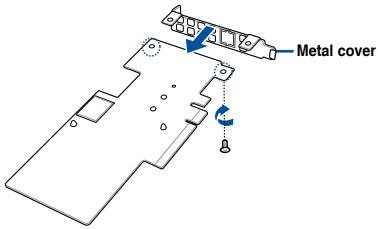

4. Connect the mini-SAS HD cable to the ASUS PIKE II card.

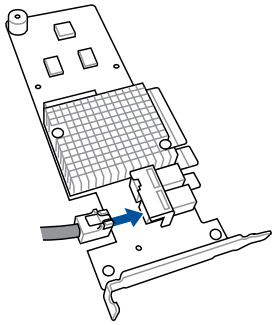

5. Install the ASUS PIKE II card and the metal cover assembly to the riser card bracket or butterfly riser card bracket. Ensure that the metal cover is inserted and firmly seated in place.

Refer to section **2.5.1 Installing an expansion card to the riser card bracket** or **2.5.2 Installing an expansion card to the butterfly riser card bracket** for the steps on installing an expansion card to the riser card bracket or butterfly riser card bracket.

6. Remove the default cable from the motherboard and the backplane.

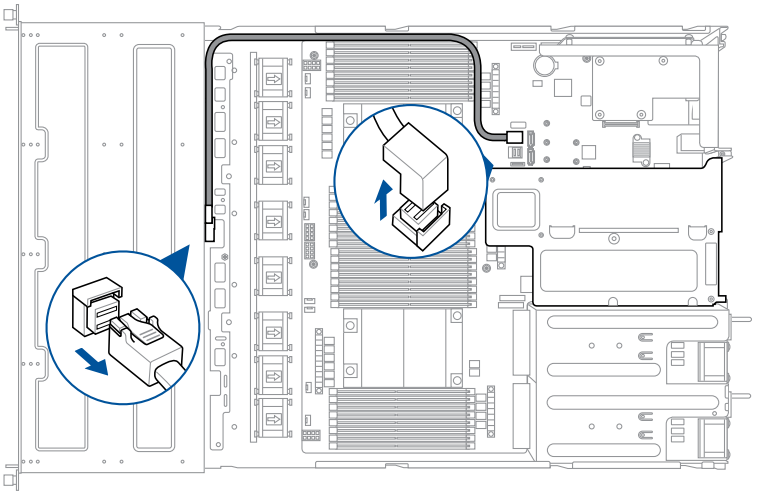

7. Connect the mini-SAS HD cable from the ASUS PIKE II card to the backplane.

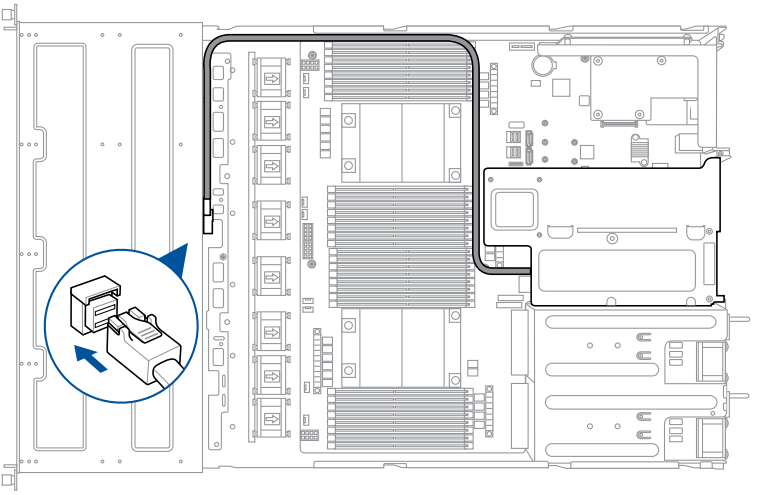

The illustrations shown above are for reference only.

RS700A-E9-RS12

1. Prepare the ASUS PIKE II card.

If your expansion card is pre-installed with a proprietary card bracket, proceed to step 4.

2. Remove the two screws on the ASUS PIKE II card (A), then remove the card bracket (B).

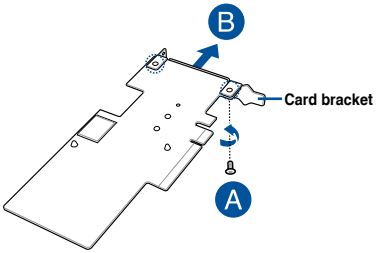

3. Secure the ASUS PIKE II card and the metal cover (proprietary card bracket) with the two screws.

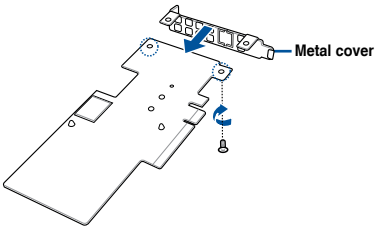

4. Connect the mini-SAS HD cables to the ASUS PIKE II card.

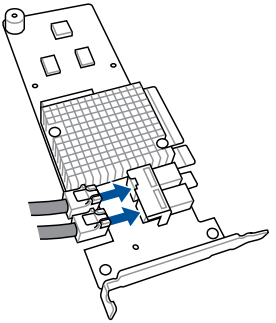

5. Install the ASUS PIKE II card and the metal cover assembly to the butterfly riser card bracket. Ensure that the metal cover is inserted and firmly seated in place.

Refer to section **2.5.2 Installing an expansion card to the butterfly riser card bracket** for the steps on installing an expansion card to the butterfly riser card bracket.

6. Connect the mini-SAS HD cables to the backplane.

Refer to section **2.8 Storage device configuration and cabling (for RS700A-E9-RS12 only)** for details on the storage device cabling.

2.5.4 Installing an ASUS PCIe-NVME2-OCuLink card to the butterfly riser card bracket (optional for RS700A-E9-RS12 only)

You can install an additional ASUS PCIe-NVME2-OCuLink card to the butterfly riser card bracket on the PCIe2 slot to support NVME storage devices on Bay 11 and Bay 12.

To install an ASUS PCIe-NVME2-OCuLink card on the butterfly riser card bracket:

1. Remove the screw that secures the butterfly riser card bracket to the chassis.

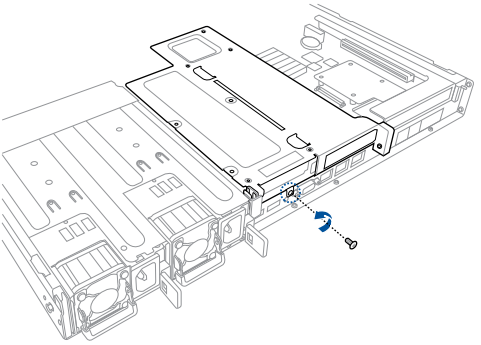

2. Firmly hold the butterfly riser card bracket, then pull it up to detach it from the PCIe x16 slot on the motherboard.

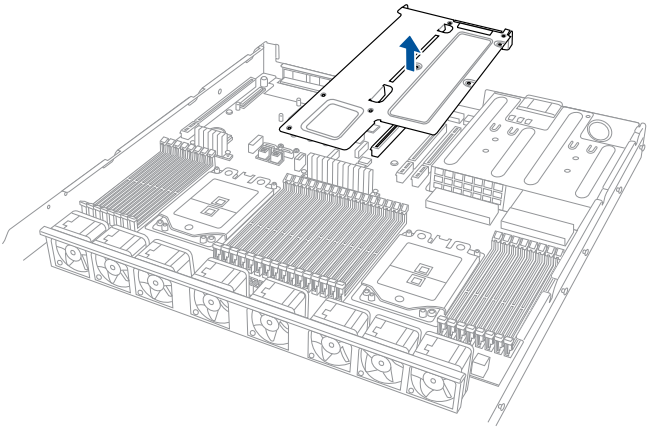

3. Place the butterfly riser card bracket on a flat and stable surface.

4. Remove the screw from the metal cover (A), then remove the metal cover (B) from the butterfly riser card bracket.

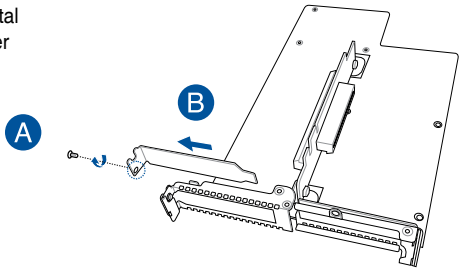

5. Prepare the replacement ASUS PCIe-NVME2-OCuLink card.

6. Connect the OCuLink cables (right angle connectors) to its corresponding slots.

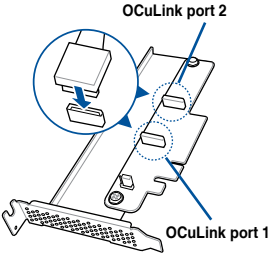

7. Install the ASUS PCIe-NVME2-OCuLink card into the butterfly riser card bracket (A), then secure the ASUS PCIe-NVME2-OCuLink card with the screw (B).

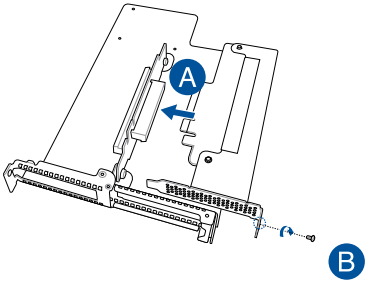

8. Install the butterfly riser card bracket and the ASUS PCIe-NVME2-OCuLink card assembly into the PCIe connector on the motherboard (A), then secure it with the screw (B). Ensure that the golden connectors of the butterfly riser card bracket is firmly seated in place.

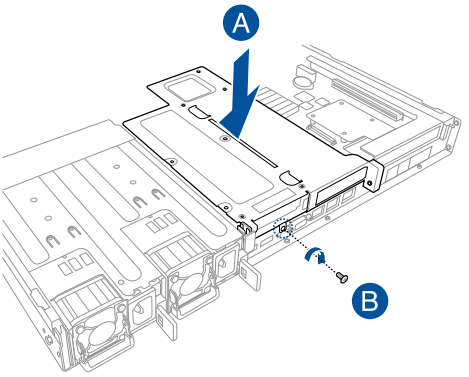

9. Connect the OCuLink cables to the backplane.

Refer to section **2.8 Storage device configuration and cabling (for RS700A-E9-RS12 only)** for details on the storage device cabling.

2.5.5 Installing an ASUS PCIe-NVME4-OCuLink card to the riser card bracket (optional for RS700A-E9-RS12 only)

You can install an additional ASUS PCIe-NVME4-OCuLink card to the riser card bracket on the PCIe1 slot to support NVME storage devices on Bay 5 to Bay 8.

To install an ASUS PCIe-NVME4-OCuLink card to the riser card bracket:

1. Firmly hold the riser card bracket, then pull it up to detach it from the PCIe x24 slot on the motherboard.

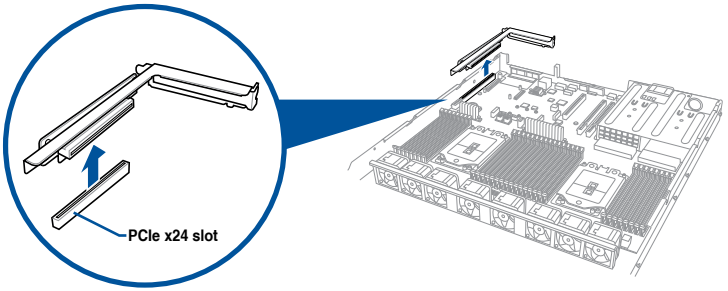

2. Remove the screw from the metal cover (A), then remove the metal cover (B) from the riser card bracket.

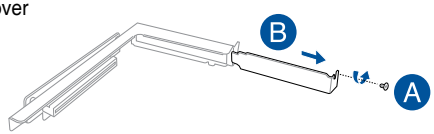

3. Prepare the ASUS PCIe-NVME4-OCuLink card.

4. Install the ASUS PCIe-NVME4-OCuLink card into the riser card bracket (A), then secure it with the screw (B).

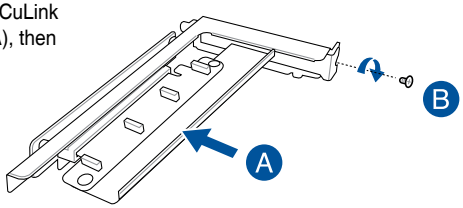

5. Install the riser card bracket and ASUS PCIe-NVME4-OCuLink card assembly into the PCIe connector on the motherboard. Ensure that the golden connectors of the riser card bracket is firmly seated in place.

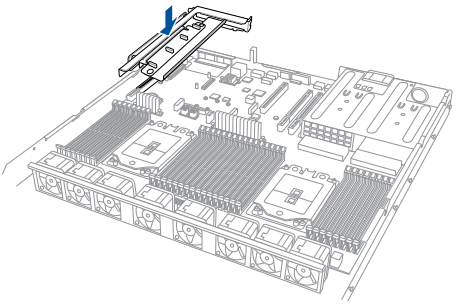

6. Connect the OCuLink cables (right angle connectors) to its corresponding slots.

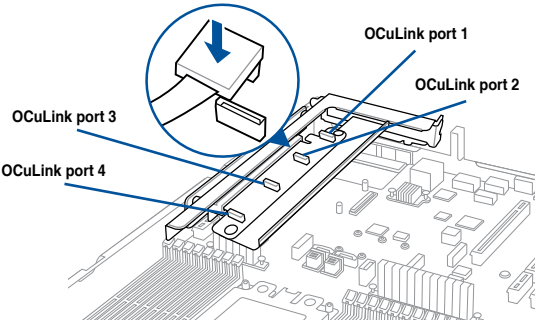

7. Connect the OCuLink cables to the backplane.

Refer to section **2.8 Storage device configuration and cabling (for RS700A-E9-RS12 only)** for details on the storage device cabling.

2.5.6 Configuring an expansion card

After installing the expansion card, configure it by adjusting the software settings.

1. Turn on the system and change the necessary BIOS settings, if any. See Chapter 5 for information on BIOS setup.
2. Assign an IRQ to the card. Refer to the following tables.
3. Install the software drivers for the expansion card.

Standard Interrupt assignments

IRQ	Priority	Standard function
0	1	System Timer
1	2	Keyboard Controller
2	-	Programmable Interrupt
3*	11	Communications Port (COM2)
4*	12	Communications Port (COM1)
5*	13	--
6	14	Floppy Disk Controller
7*	15	--
8	3	System CMOS/Real Time Clock
9*	4	ACPI Mode when used
10*	5	IRQ Holder for PCI Steering
11*	6	IRQ Holder for PCI Steering
12*	7	PS/2 Compatible Mouse Port
13	8	Numeric Data Processor
14*	9	Primary IDE Channel
15*	10	Secondary IDE Channel

*** These IRQs are usually available for ISA or PCI devices.**

2.5.7 Installing Mezzanine cards

To install a Mezzanine card:

1. Locate the Mezzanine card connector on your motherboard.

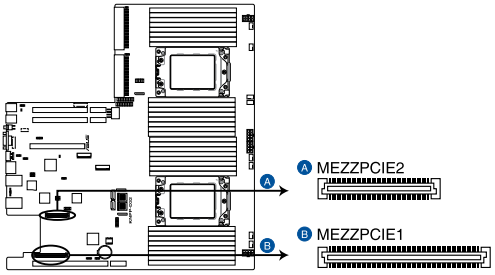

KNPP-D32 MEZZPCIE connectors

2. Firmly hold the riser card bracket, then pull it up to detach it from the PCIe x16 slot on the motherboard.

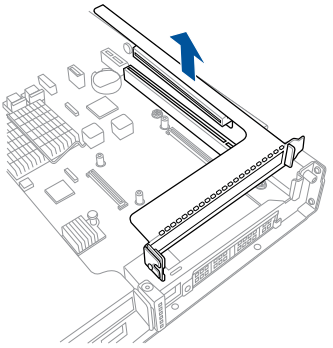

3. Remove the screw from the metal cover (A), then remove the metal cover (B) from chassis.

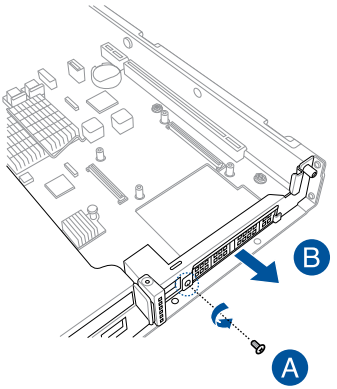

4. Select the slots that are going to be used for your Mezzanine card, then use a screwdriver and pry the corresponding slots until it pops off.

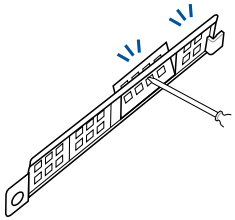

5. Prepare the Mezzanine card.

6. Insert the ports of the Mezzanine card into the mounting hole on the chassis, then insert the golden connector of the Mezzanine card into the **MEZZPCIe1** (OCP) connector on the motherboard.

   Ensure that the stand screws on the motherboard is aligned and matched to the screw holes of the Mezzanine card.

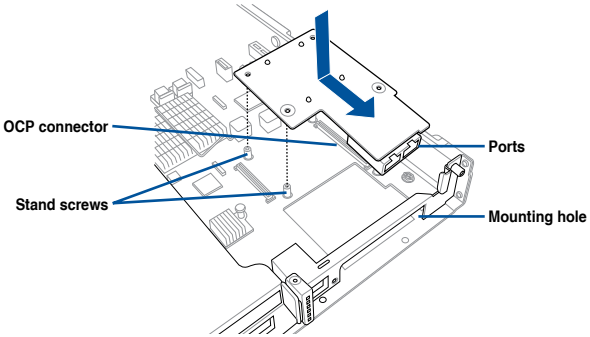

7. Secure the Mezzanine card with four bundled screws.

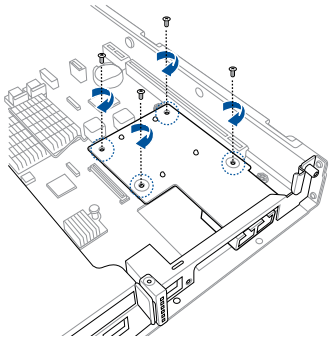

8. Reinstall the metal cover (A) and secure it with the screw (B).

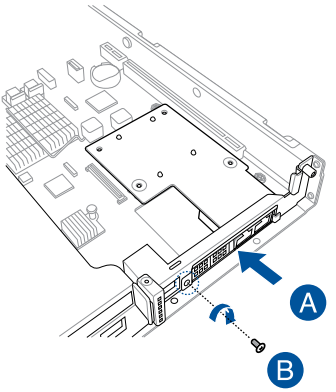

9. Install the riser card bracket into the PCIe connector on the motherboard. Ensure that the golden connectors of the riser card bracket is firmly seated in place.

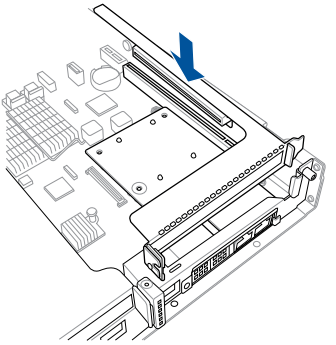

2.5.8 Installing M.2 (NGFF) cards

To install an M.2 (NGFF) card:

1. Locate the M.2 (NGFF) connectors on your motherboard.

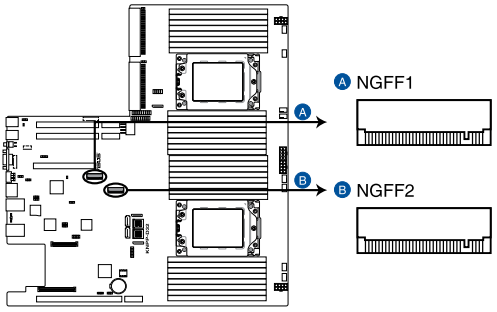

KNPP-D32 NGFF connectors

2. Remove the top screw and the stand from the motherboard.

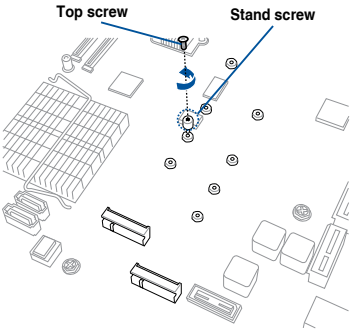

3. Select an appropriate screw hole on the motherboard for your M.2 card, then secure the stand to the motherboard.

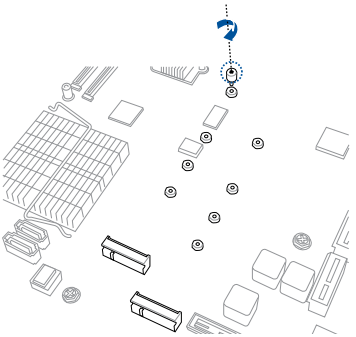

4. Prepare the M.2 card.

5. Align and insert the M.2 card into the M.2 connector on the motherboard.

   Ensure that the golden connector of the M.2 card is inserted firmly in place and that the screw hole on the M.2 card matches the stand screw on the motherboard.

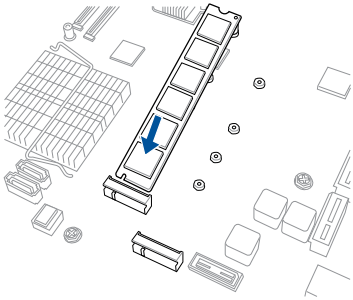

6. Secure the M.2 card with the top screw.

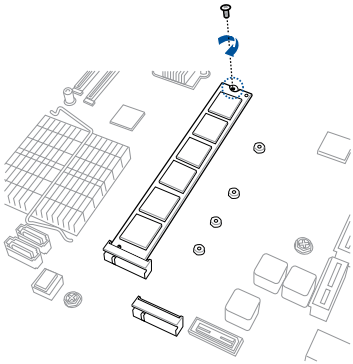

Ensure that the M.2 card is positioned between the top screw and the stand screw before securing it.

2.6 Cable connections

- The bundled system cables are pre-connected before shipment. You do not need to disconnect these cables unless you are going to remove pre-installed components to install additional devices.
- Refer to Chapter 4 for detailed information on the connectors.

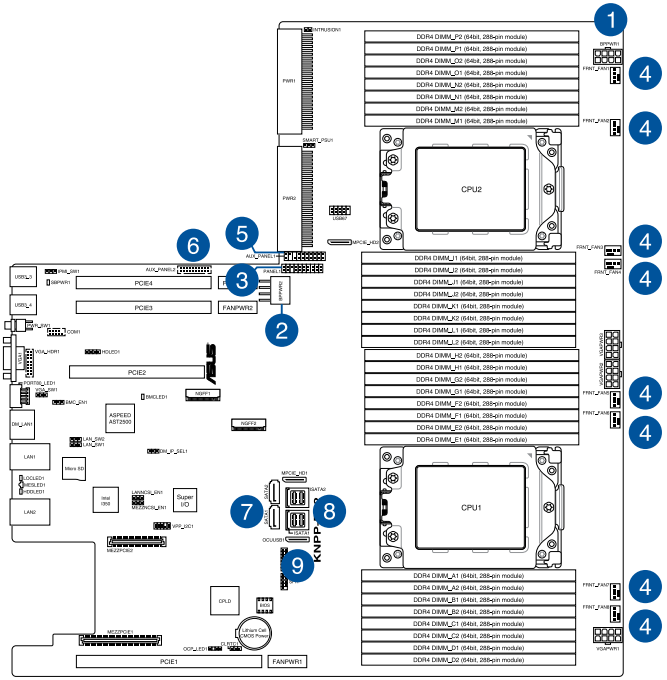

Pre-connected system cables

1. 8-pin BPPWR1 power connector (connected to backplane)
2. 8-pin BPPWR2 power connector (connected to for RS700A-E9-RS12 only)
3. Panel connector (connected to front I/O board)
4. System fan connectors (from motherboard FAN1-8 to system fans)
5. Auxiliary panel 1 connector (connected to front I/O board)
6. Auxiliary panel 2 connector (connected to front I/O board, for RS700A-E9-RS12 only)
7. SATA connectors (one connector connected to backplane, for RS700A-E9-RS4 only)
8. ISATA connectors (connected to backplane)
9. OCU-USB to USB connector (connected to front I/O board, for RS700A-E9-RS4 only)

2.7 Backplane cabling

RS700A-E9-RS4

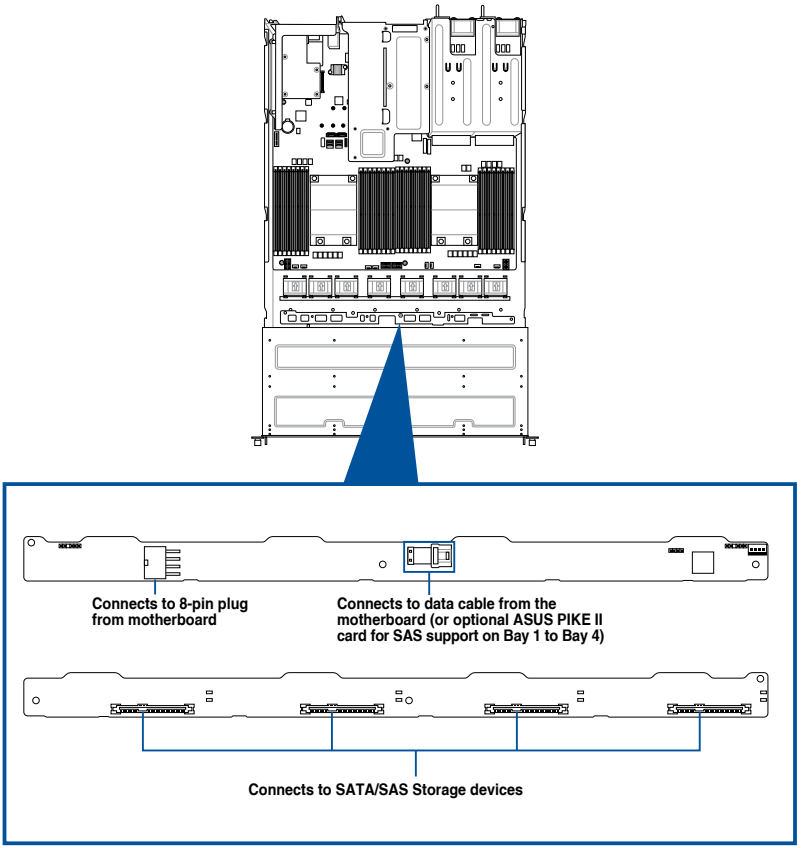

RS700A-E9-RS12

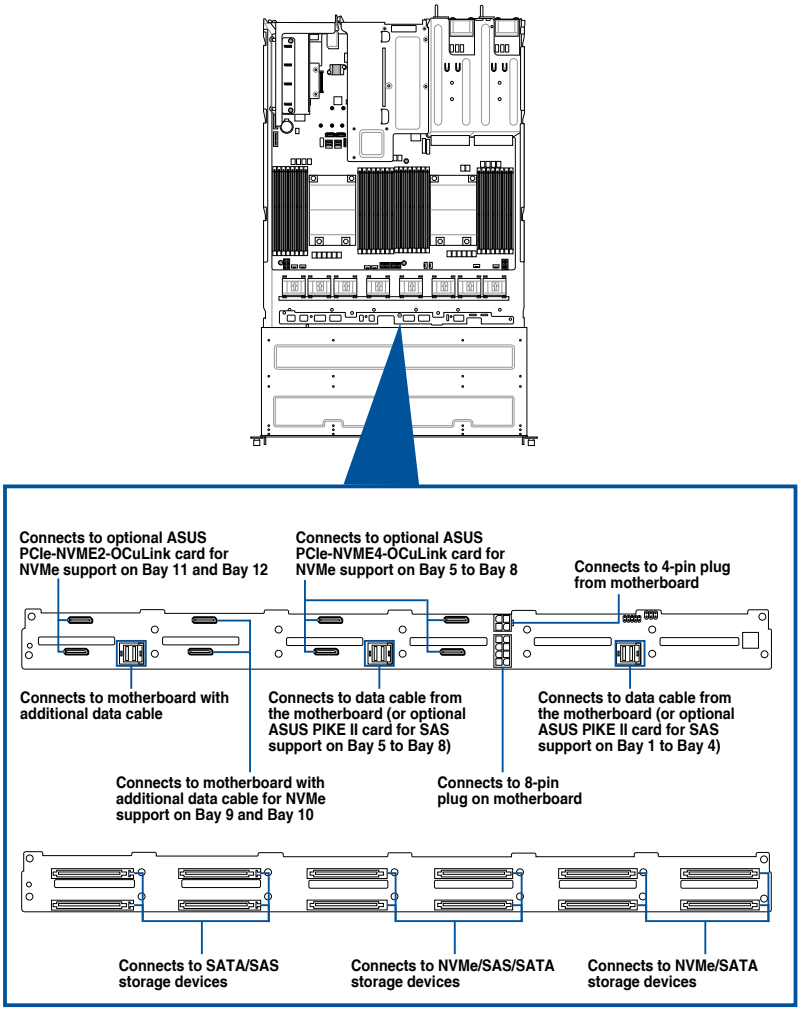

2.8 Storage device configuration and cabling (for RS700A-E9-RS12 only)

This section illustrates some storage configurations that is recommended with your server system. Before you start installing or removing the storage device cables, ensure that you have installed the correct storage devices into the supported bays.

Refer to section **2.4 Storage Devices** for details on how to install storage devices.

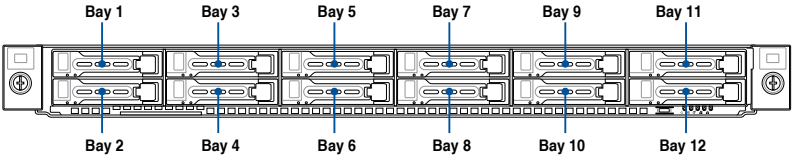

- Bay 1 to bay 4 supports SATA by default. SAS support requires optional ASUS PIKE II card.
- Bay 5 to bay 8 supports SATA by default. SAS support requires optional ASUS PIKE II card. NVMe support requires optional upgrade kit.
- Bay 9 to bay 12 supports SATA with optional cables. NVMe support requires optional upgrade kit.
- All bays support 2.5” drives with trays.

2.8.1 8 x SATA storage device configuration and cabling

Backplane connector	Cable	Connect to
MSAS_HD1	Mini-SAS HD (vertical) to Mini-SAS HD (right angle)	ISATA1 on motherboard
MSAS_HD2	Mini-SAS HD (vertical) to Mini-SAS HD (right angle)	ISATA2 on motherboard

1. Install the storage devices into the supported bays.

Refer to section **2.4 Storage Devices** for details on how to install storage devices.

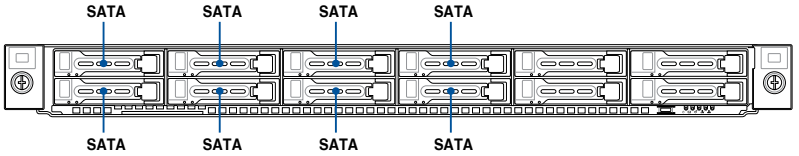

The illustrations are for reference only and may vary with your storage device setup.

2. Remove the six (6) screws on both sides of the front cover with a Phillips screwdriver (A), then firmly hold the front cover and slide it towards the front panel until it is disengaged from the chassis (B).

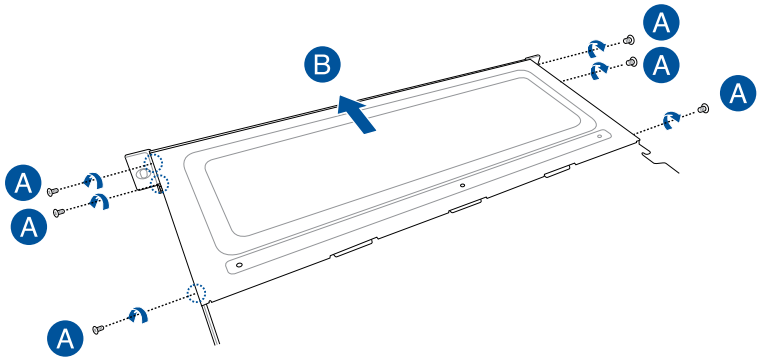

3. Lift the front cover to reveal the backplane (A), then cut the cable tie(s) (B).

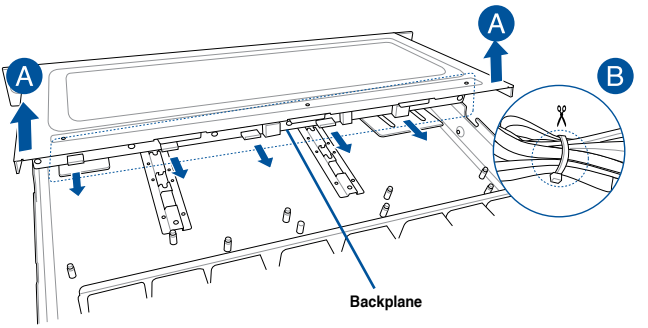

4. Connect the mini-SAS HD cables to the motherboard and the backplane.

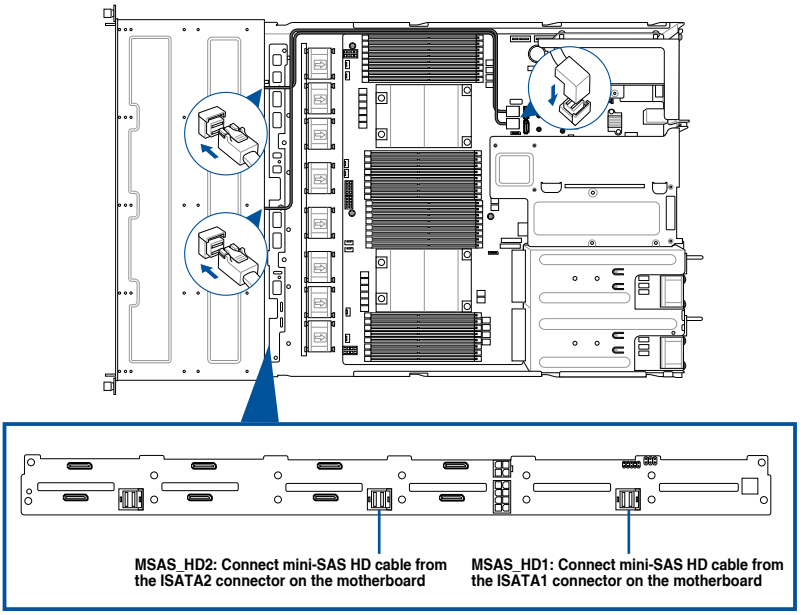

5. Tie the cables with cable tie(s) (A), then reinstall the front cover back into the chassis (B).

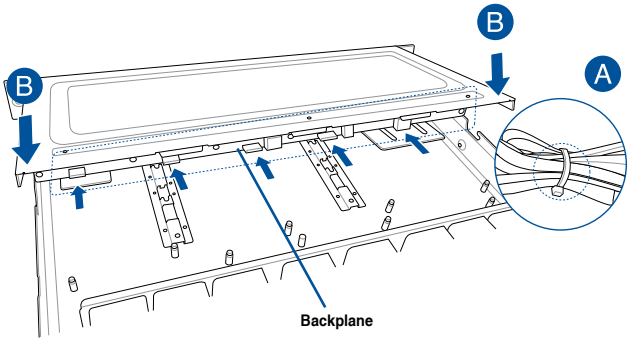

6. Firmly hold the front cover and slide it towards the rear panel until it is locked in the chassis (A), then secure the front cover with the screws removed earlier (B).

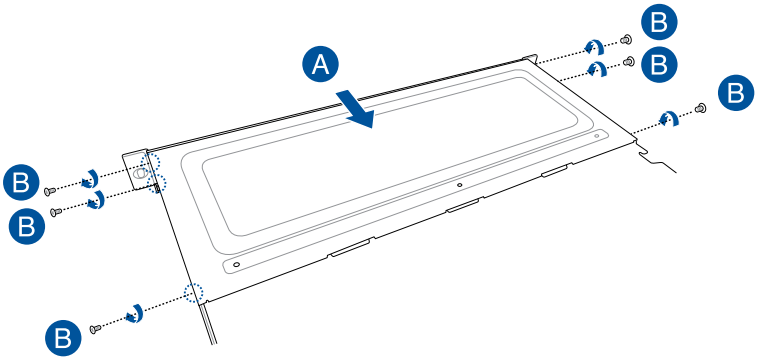

2.8.2 10 x SATA storage device configuration and cabling

Backplane connector	Cable	Connect to
MSAS_HD1	Mini-SAS HD (vertical) to Mini-SAS HD (right angle)	ISATA1 on motherboard
MSAS_HD2	Mini-SAS HD (vertical) to Mini-SAS HD (right angle)	ISATA2 on motherboard
MSAS_HD3	Mini-SAS HD (vertical) to 2 x SATA 7-pin	P1 connected to SATA1 P2 connected to SATA2

1. Install the storage devices into the supported bays.

Refer to section **2.4 Storage Devices** for details on how to install storage devices.

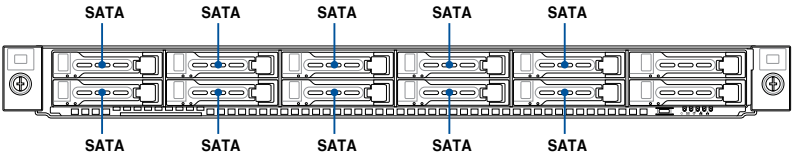

The illustrations are for reference only and may vary with your storage device setup.

2. Remove the six (6) screws on both sides of the front cover with a Phillips screwdriver (A), then firmly hold the front cover and slide it towards the front panel until it is disengaged from the chassis (B).

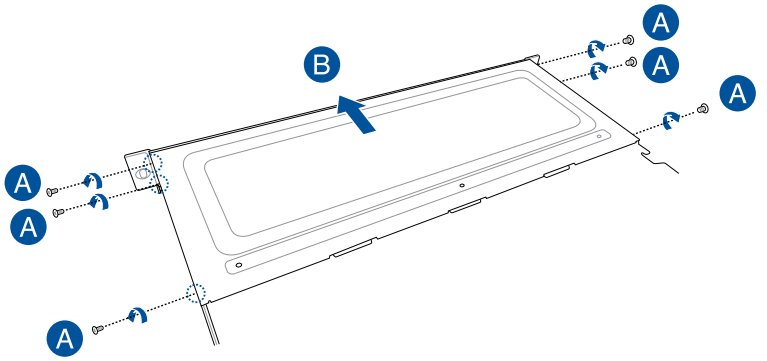

3. Lift the front cover to reveal the backplane (A), then cut the cable tie(s) (B).

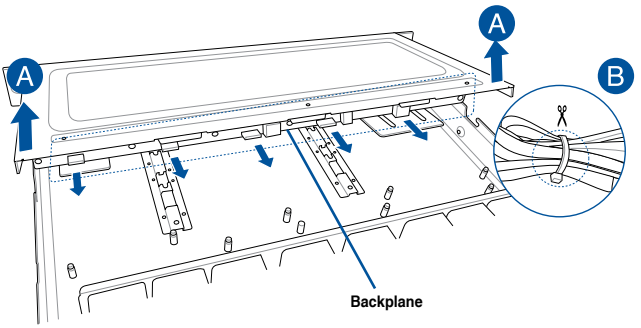

4. Connect the mini-SAS HD cables to the motherboard and the backplane.

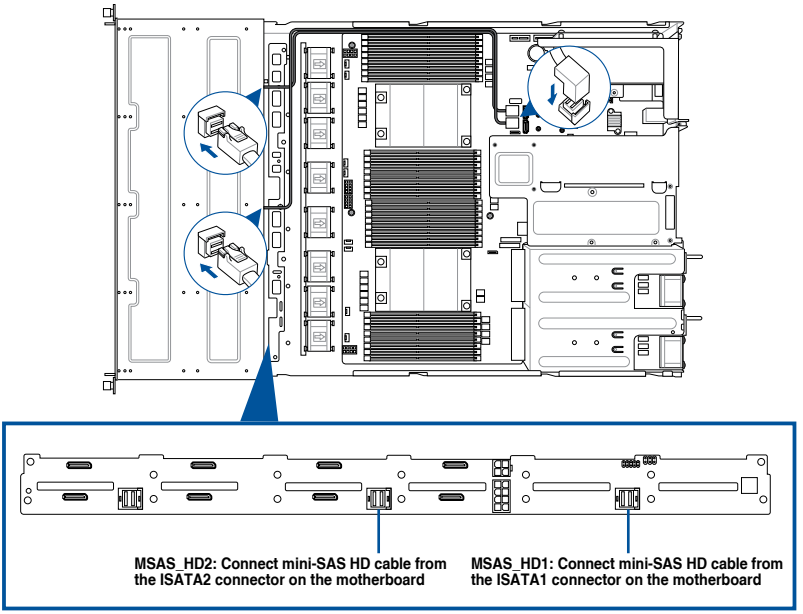

5. Connect the additional mini-SAS HD to 2 x SATA cable to the motherboard and the backplane.

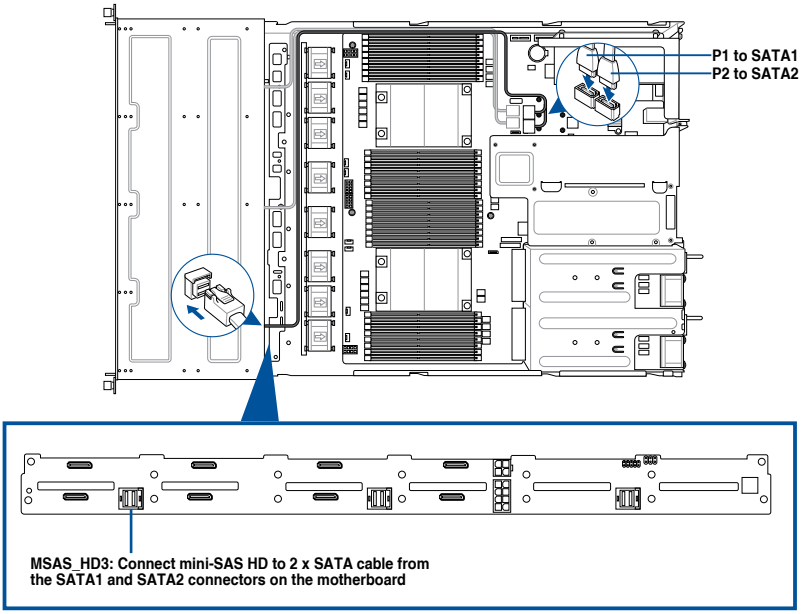

6. Tie the cables with cable tie(s) (A), then reinstall the front cover back into the chassis (B).

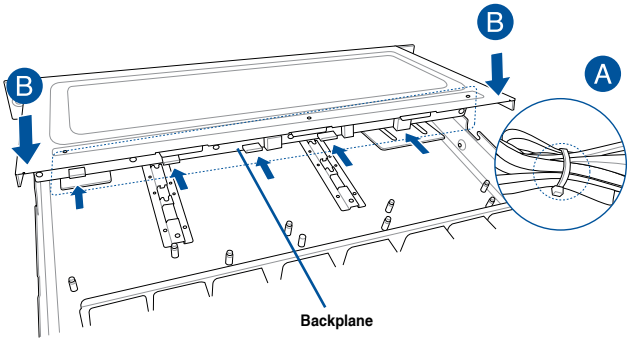

7. Firmly hold the front cover and slide it towards the rear panel until it is locked in the chassis (A), then secure the front cover with the screws removed earlier (B).

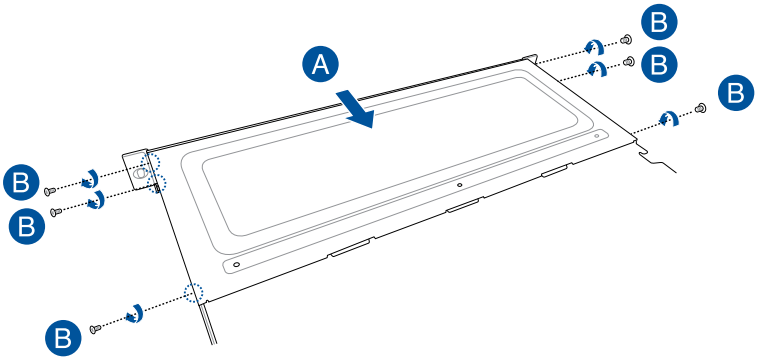

2.8.3 8 x SATA/SAS and 4 x SATA storage device configuration and cabling

Backplane connector	Cable	Connect to
MSAS_HD1	Mini-SAS HD (vertical) to Mini-SAS HD (vertical)	ASUS PIKE II Card
MSAS_HD2	Mini-SAS HD (vertical) to Mini-SAS HD (vertical)	ASUS PIKE II Card
MSAS_HD3	Mini-SAS HD (vertical) to Mini-SAS HD (right angle)	ISATA1 on motherboard

1. Install the storage devices into the supported bays.

Refer to section **2.4 Storage Devices** for details on how to install storage devices.

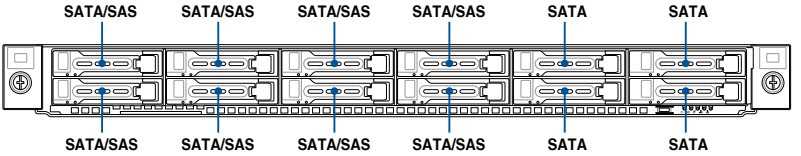

The illustrations are for reference only and may vary with your storage device setup.

2. Install an ASUS PIKE II card into your server system.

Refer to section **2.5.3 Installing an ASUS PIKE II card** for details on how to install an ASUS PIKE II card.

3. Remove the six (6) screws on both sides of the front cover with a Phillips screwdriver (A), then firmly hold the front cover and slide it towards the front panel until it is disengaged from the chassis (B).

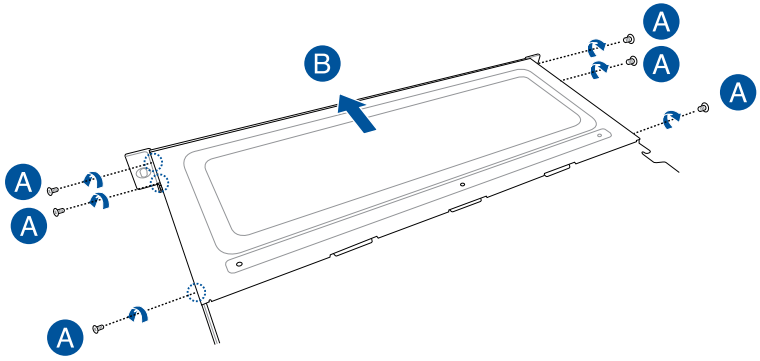

4. Lift the front cover to reveal the backplane (A), then cut the cable tie(s) (B).

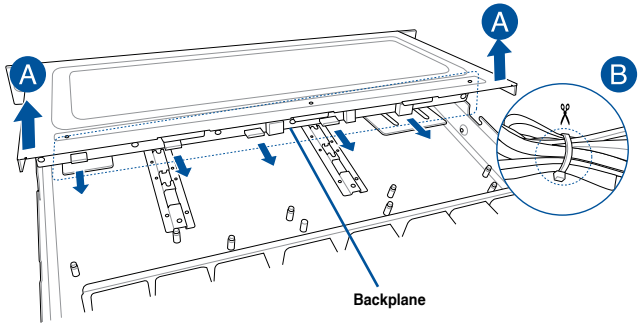

5. Remove the default cables from the motherboard and the backplane.

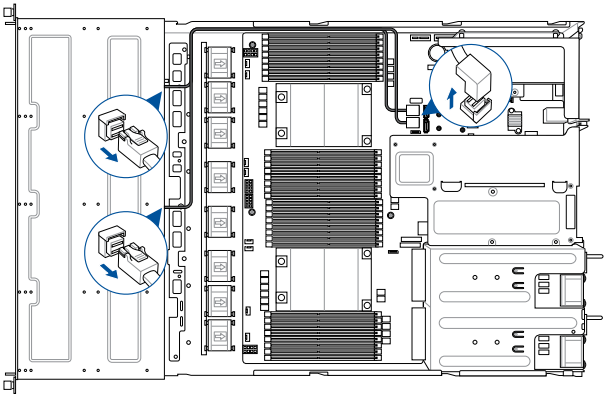

6. Connect the mini-SAS cable to the motherboard and the backplane.

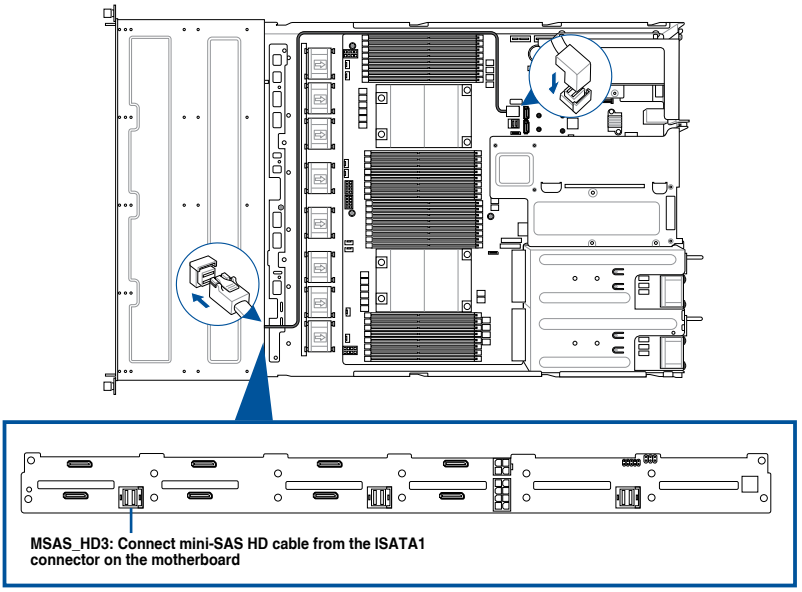

7. Connect the mini-SAS cables from the ASUS PIKE II card to the backplane.

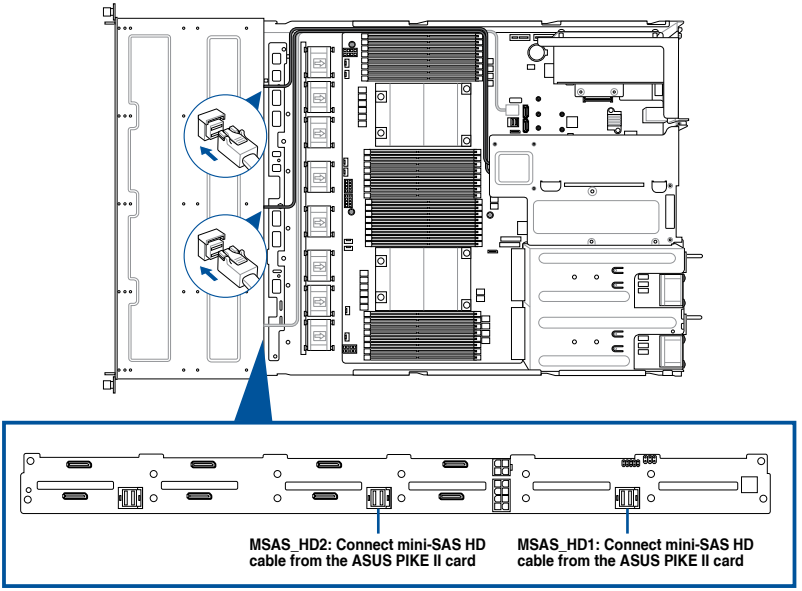

8. Tie the cables with cable tie(s) (A), then reinstall the front cover back into the chassis (B).

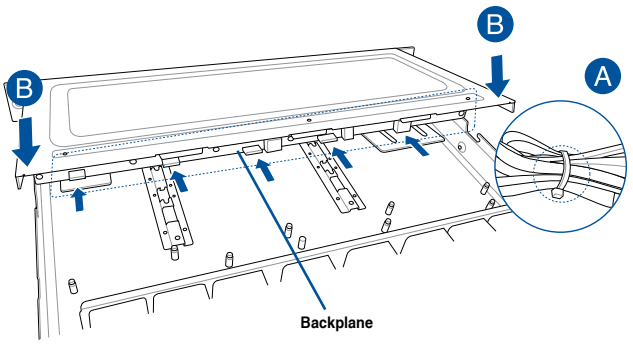

9. Firmly hold the front cover and slide it towards the rear panel until it is locked in the chassis (A), then secure the front cover with the screws removed earlier (B).

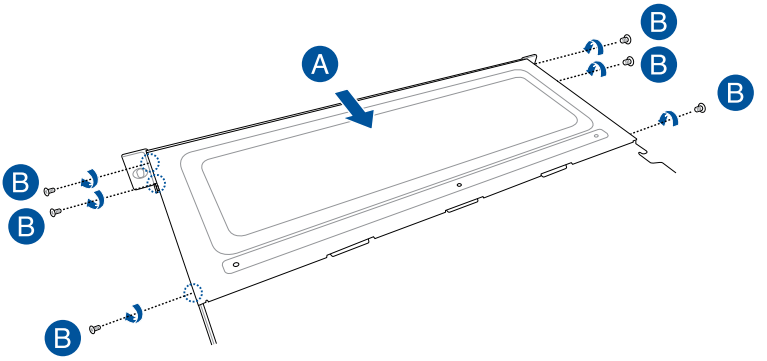

2.8.4 2 x NVMe storage device configuration and cabling

Backplane connector	Cable	Connect to
OCUPCIe5	OCuLink (vertical) to OCuLink (left angle)	MPCIe_HD1
OCUPCIe6	OCuLink (vertical) to OCuLink (left angle)	MPCIe_HD2

1. Install the storage devices into the supported bays.

Refer to section **2.4 Storage Devices** for details on how to install storage devices.

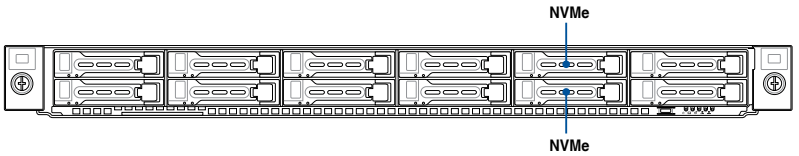

The illustrations are for reference only and may vary with your storage device setup.

2. Remove the six (6) screws on both sides of the front cover with a Phillips screwdriver (A), then firmly hold the front cover and slide it towards the front panel until it is disengaged from the chassis (B).

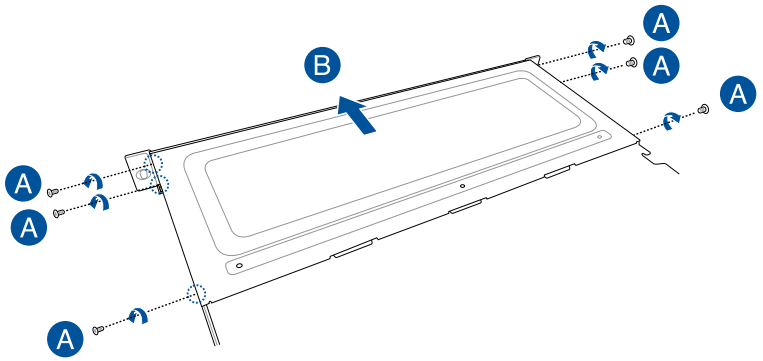

3. Lift the front cover to reveal the backplane (A), then cut the cable tie(s) (B).

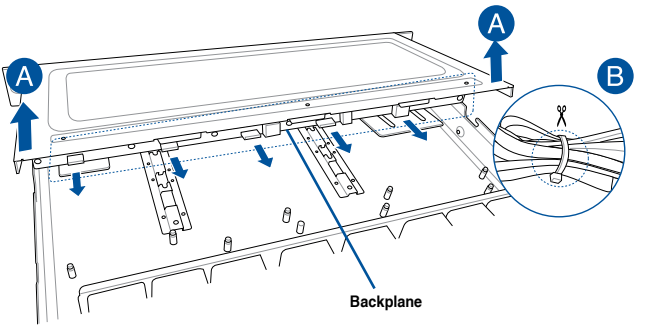

4. Connect the OCuLink cables to the motherboard (left angle connectors) and the backplane (vertical connectors)

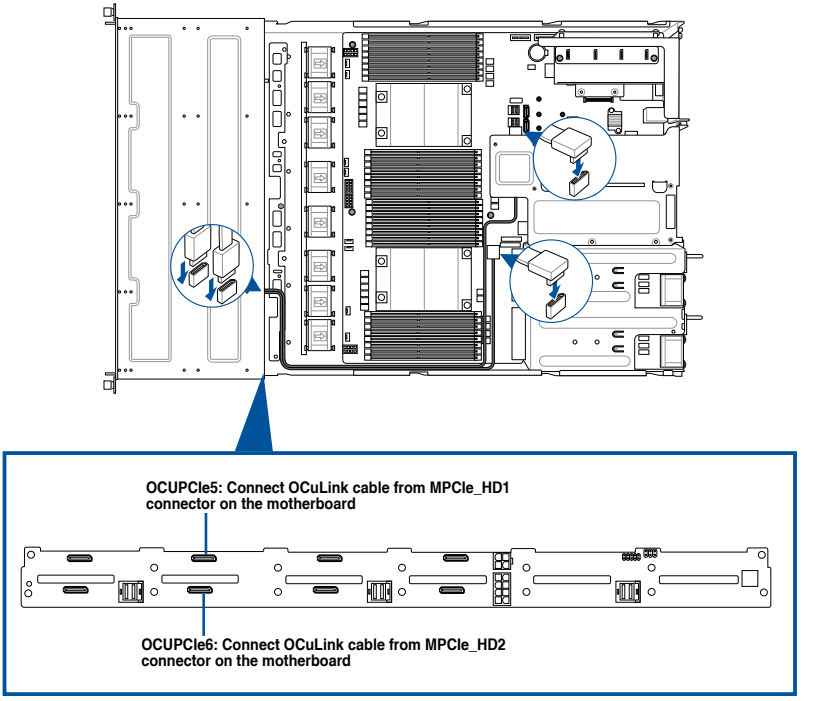

5. Tie the cables with cable tie(s) (A), then reinstall the front cover back into the chassis (B).

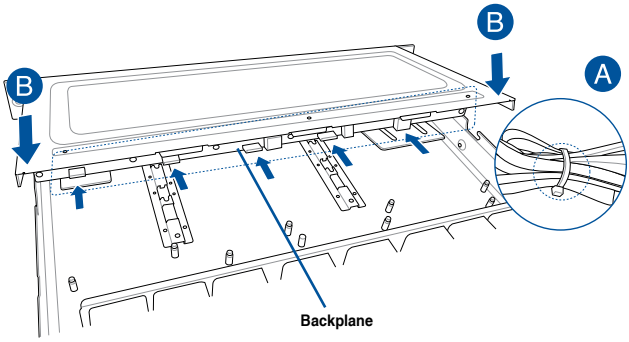

6. Firmly hold the front cover and slide it towards the rear panel until it is locked in the chassis (A), then secure the front cover with the screws removed earlier (B).

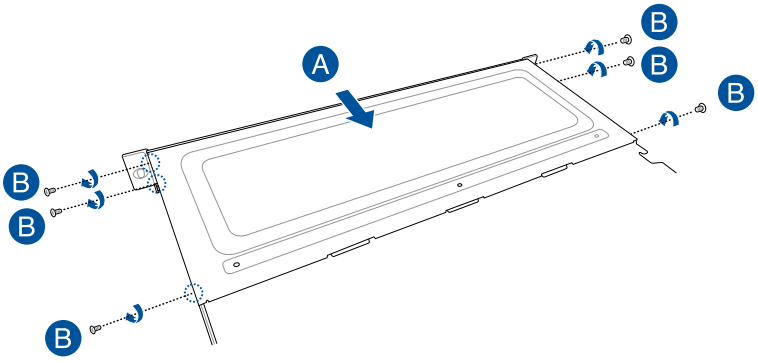

2.8.5 4 x NVMe storage device configuration and cabling

Backplane connector	Cable	Connect to
OCUPCIe5	OCuLink (vertical) to OCuLink (left angle)	MPCIe_HD1
OCUPCIe6	OCuLink (vertical) to OCuLink (left angle)	MPCIe_HD2
OCUPCIe7	OCuLink (vertical) to OCuLink (right angle)	Port 1 on ASUS PCIe-NVME2-OCuLink Card
OCUPCIe8	OCuLink (vertical) to OCuLink (right angle)	Port 2 on ASUS PCIe-NVME2-OCuLink Card

1. Install the storage devices into the supported bays.

Refer to section **2.4 Storage Devices** for details on how to install storage devices.

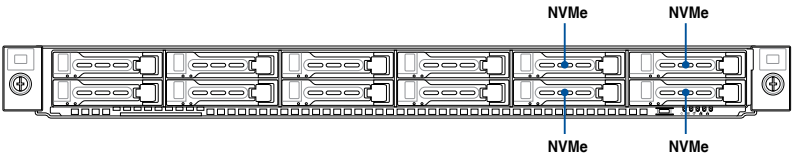

The illustrations are for reference only and may vary with your storage device setup.

2. Install a PCIe-NVME2-OCuLink card into your server system.

Refer to section **2.5.4 Installing an ASUS PCIe-NVME2-OCuLink card to the butterfly riser card bracket (optional for RS700A-E9-RS12 only)** for details on how to install a PCIe-NVME2-OCuLink card.

3. Remove the six (6) screws on both sides of the front cover with a Phillips screwdriver (A), then firmly hold the front cover and slide it towards the front panel until it is disengaged from the chassis (B).

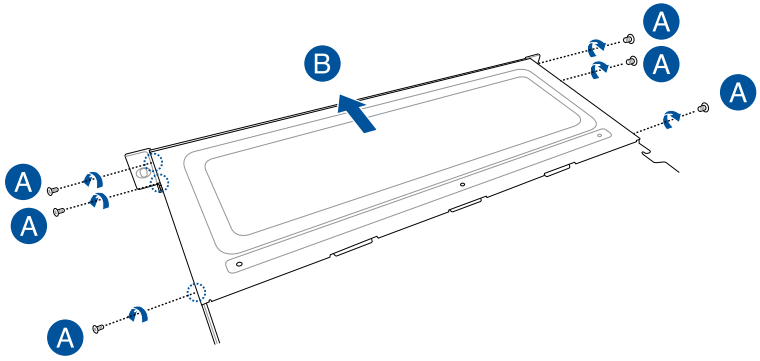

4. Lift the front cover to reveal the backplane (A), then cut the cable tie(s) (B).

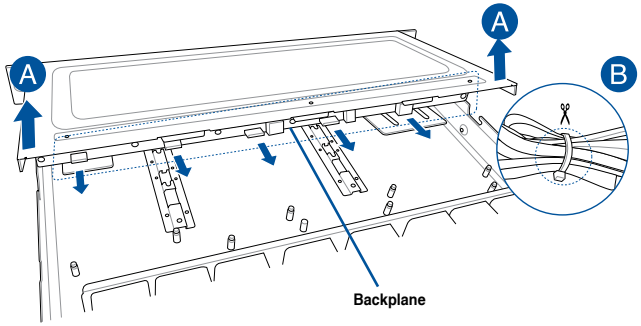

5. Connect the OCuLink cables to the motherboard (left angle connectors) and the backplane (vertical connectors)

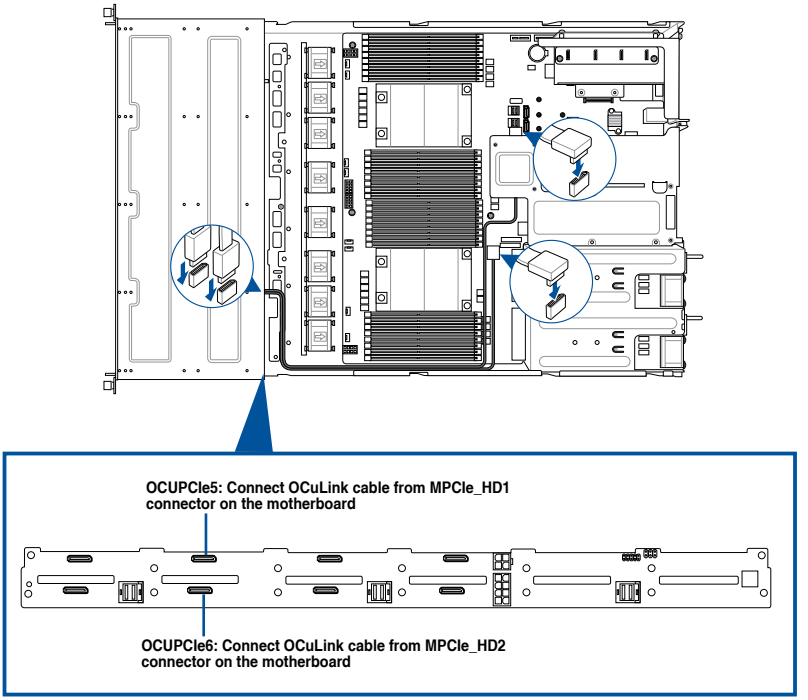

6. Connect the OCuLink cables from the ASUS PCIe-NVME2-OCuLink card to the backplane.

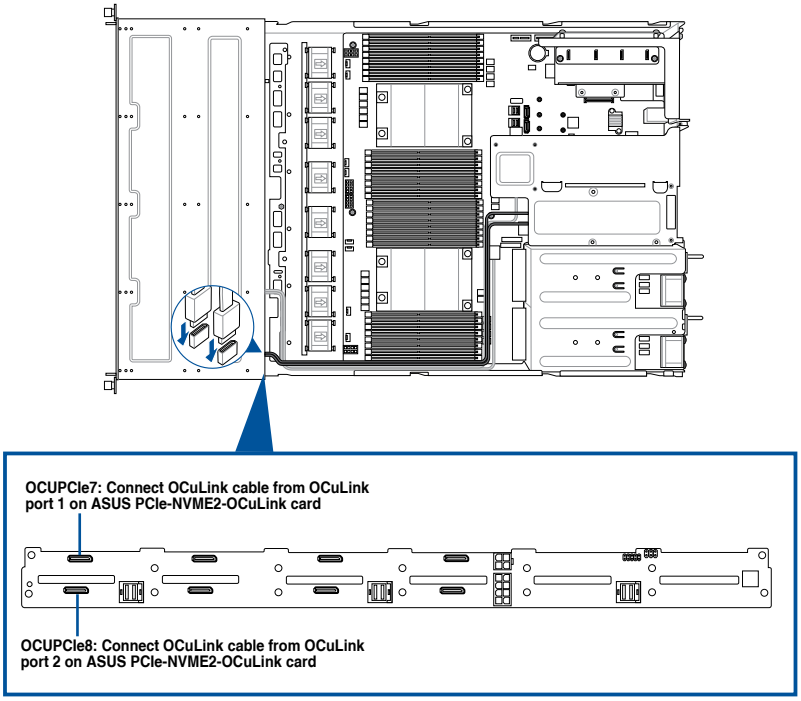

7. Tie the cables with cable tie(s) (A), then reinstall the front cover back into the chassis (B).

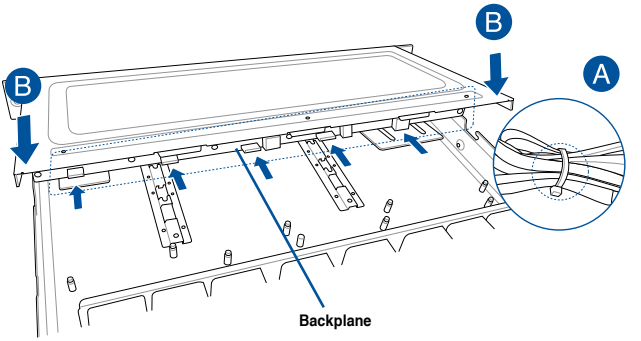

8. Firmly hold the front cover and slide it towards the rear panel until it is locked in the chassis (A), then secure the front cover with the screws removed earlier (B).

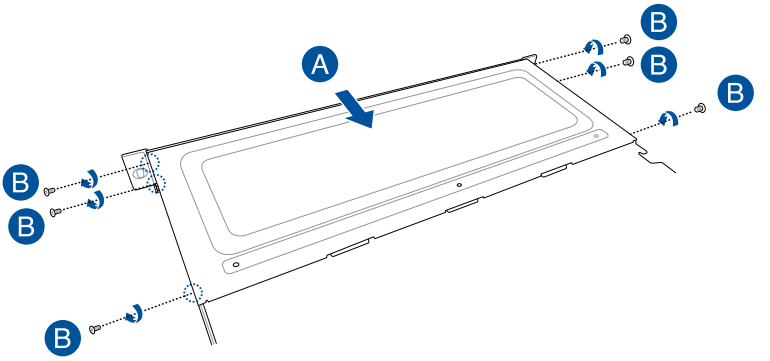

2.8.6 8 x NVMe storage device configuration and cabling

Backplane connector	Cable	Connect to
OCUPCIe1	OCuLink (vertical) to OCuLink (right angle)	Port 1 on ASUS PCIe-NVME4-OCuLink Card
OCUPCIe2	OCuLink (vertical) to OCuLink (right angle)	Port 2 on ASUS PCIe-NVME4-OCuLink Card
OCUPCIe3	OCuLink (vertical) to OCuLink (right angle)	Port 3 on ASUS PCIe-NVME4-OCuLink Card
OCUPCIe4	OCuLink (vertical) to OCuLink (right angle)	Port 4 on ASUS PCIe-NVME4-OCuLink Card
OCUPCIe5	OCuLink (vertical) to OCuLink (left angle)	MPCIe_HD1
OCUPCIe6	OCuLink (vertical) to OCuLink (left angle)	MPCIe_HD2
OCUPCIe7	OCuLink (vertical) to OCuLink (right angle)	Port 1 on ASUS PCIe-NVME2-OCuLink Card
OCUPCIe8	OCuLink (vertical) to OCuLink (right angle)	Port 2 on ASUS PCIe-NVME2-OCuLink Card

1. Install the storage devices into the supported bays.

Refer to section **2.4 Storage Devices** for details on how to install storage devices.

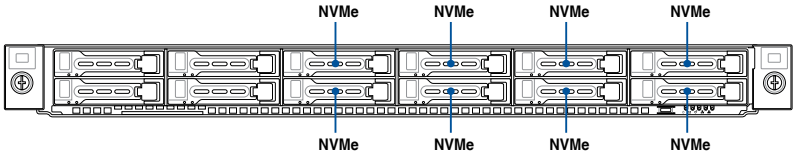

The illustrations are for reference only and may vary with your storage device setup.

2. Install a PCIe-NVME2-OCuLink card into your server system.

Refer to section **2.5.4 Installing an ASUS PCIe-NVME2-OCuLink card to the butterfly riser card bracket (optional for RS700A-E9-RS12 only)** for details on how to install a ASUS PCIe-NVME2-OCuLink card.

3. Install a PCIe-NVME4-OCuLink card into your server system.

Refer to section **2.5.5 Installing an ASUS PCIe-NVME4-OCuLink card to the riser card bracket (optional for RS700A-E9-RS12 only)** for details on how to install a ASUS PCIe-NVME4-OCuLink card.

4. Remove the six (6) screws on both sides of the front cover with a Phillips screwdriver (A), then firmly hold the front cover and slide it towards the front panel until it is disengaged from the chassis (B).

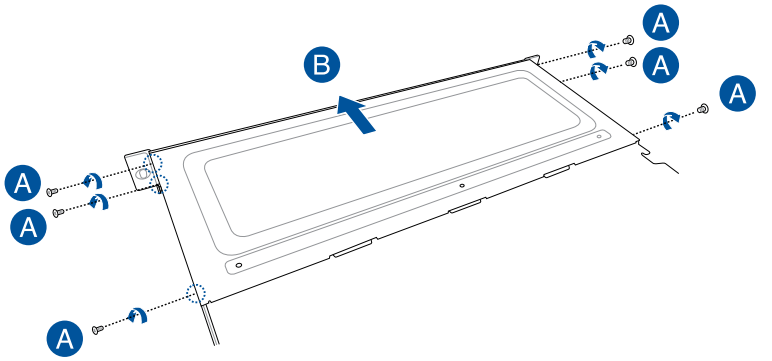

5. Lift the front cover to reveal the backplane (A), then cut the cable tie(s) (B).

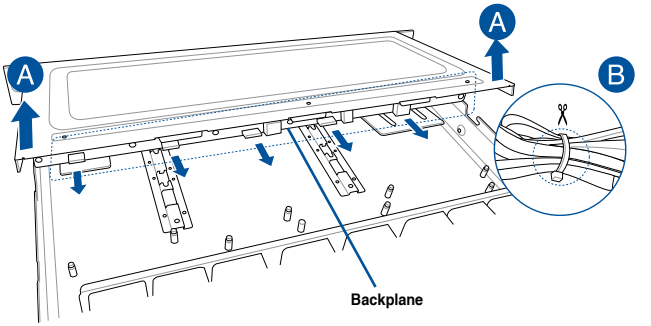

6. Connect the OCuLink cables to the motherboard (left angle connectors) and the backplane (vertical connectors).

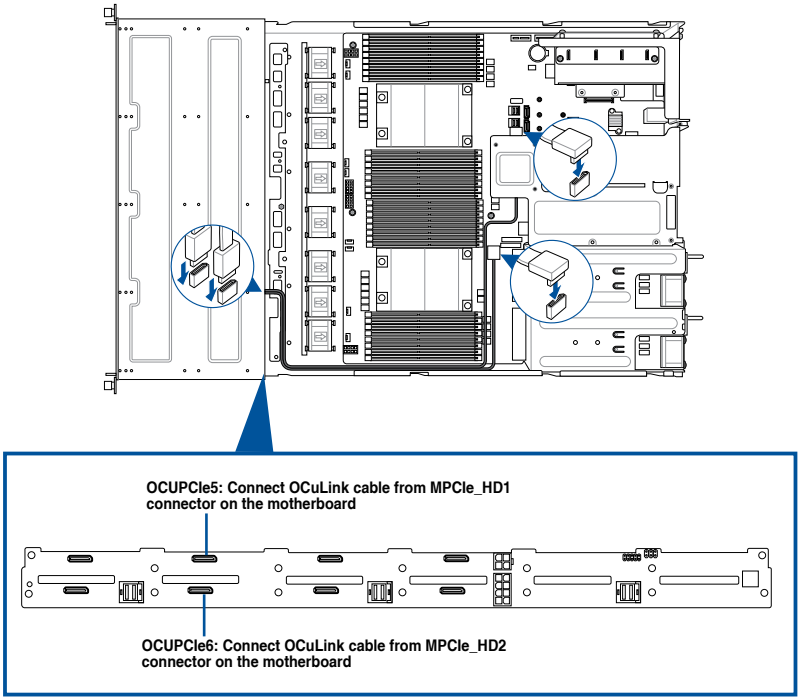

7. Connect the OCuLink cables from the ASUS PCIe-NVME2-OCuLink card to the backplane.

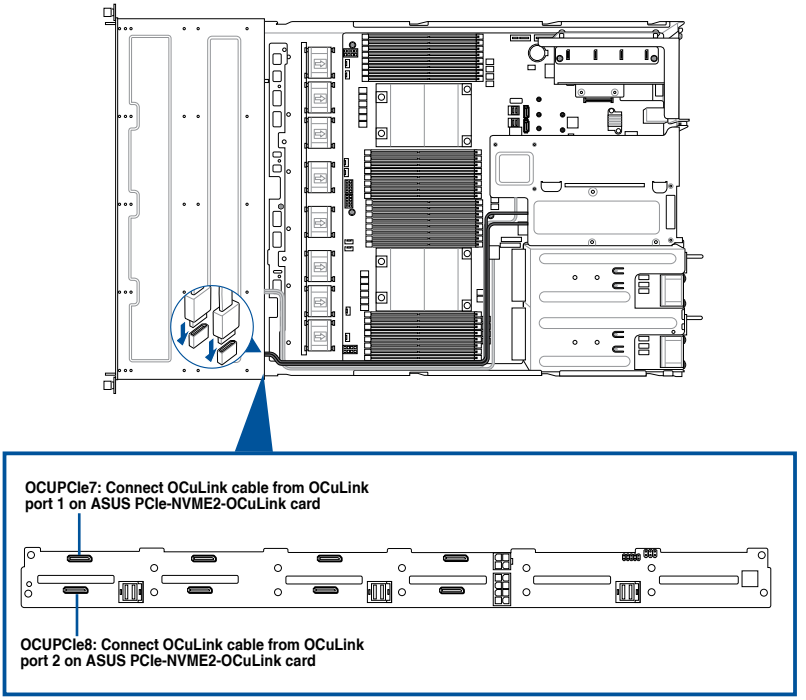

8. Connect the OCuLink cables from the ASUS PCIe-NVME4-OCuLink card to the backplane.

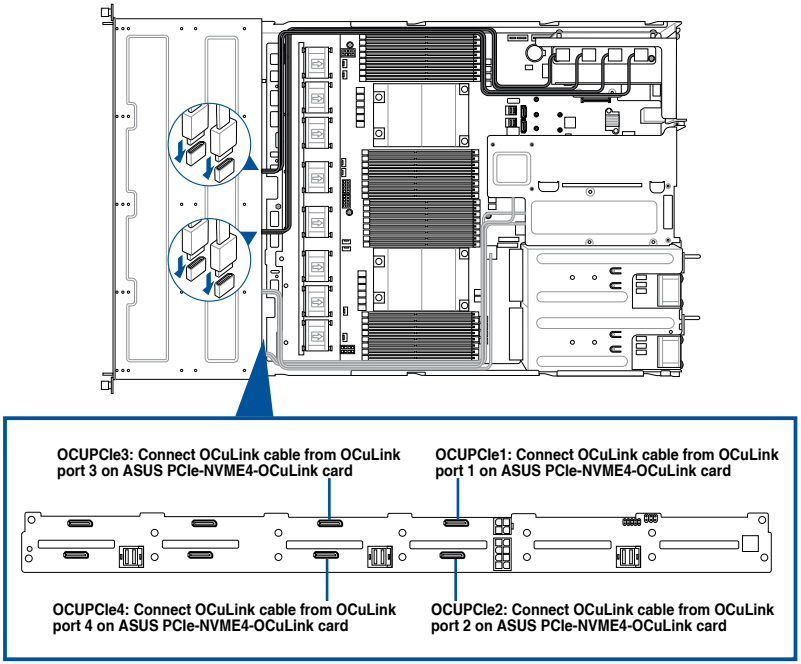

9. Tie the cables with cable tie(s) (A), then reinstall the front cover back into the chassis (B).

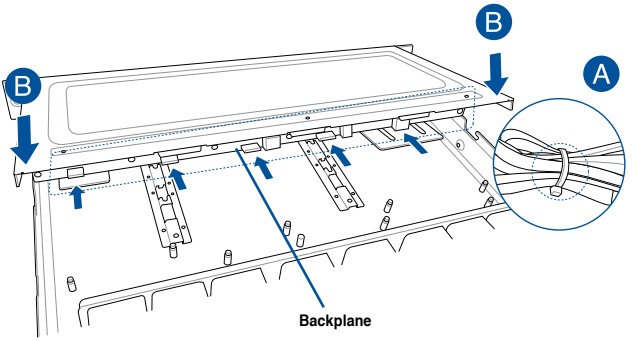

10. Firmly hold the front cover and slide it towards the rear panel until it is locked in the chassis (A), then secure the front cover with the screws removed earlier (B).

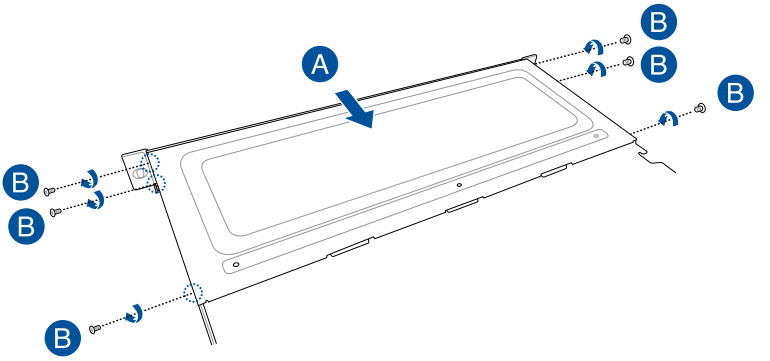

2.9 Removable/optional components

This section explains how to install optional components into the system and covers the following components:

1. System fans
2. Redundant power supply module
3. Slim type optical drive (optional)

Ensure that the system is turned off before removing any components.

You may need to remove previously installed component or factory shipped components when installing optional components.

2.9.1 System fans

To uninstall the system fans:

1. Disconnect the system fan cable from the fan connector on the motherboard.
2. Lift the fan, then set it aside.
3. Repeat steps 1 to 2 to uninstall the other system fans.

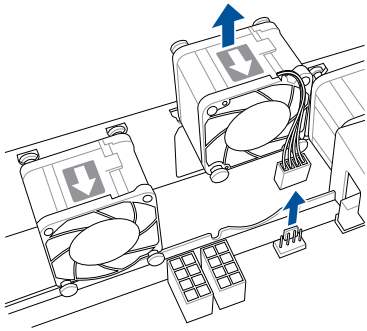

To reinstall the system fans:

1. Insert the fan into the fan cage. The airflow directional arrow on the fan should point towards the system rear panel.
2. Connect the system fan cable to the fan connector on the motherboard.

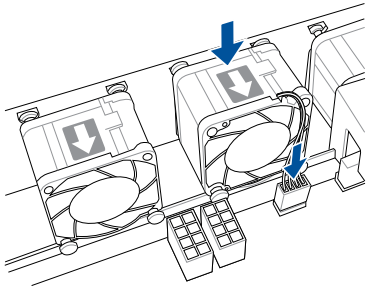

2.9.2 Redundant power supply module

To replace a failed redundant power supply module:

1. Lift up the power supply module lever.

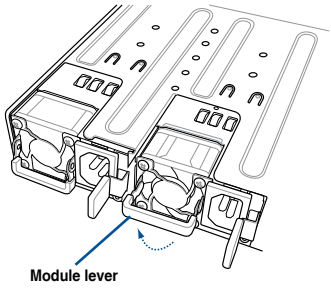

2. Hold the power supply module lever and press the PSU latch, then pull the power supply module out of the system chassis.

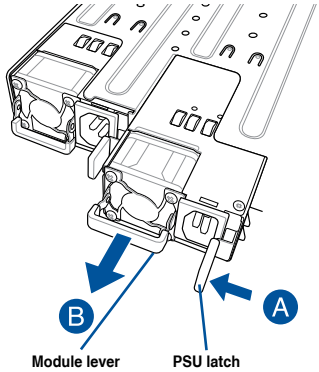

3. Prepare the replacement power supply module.
4. Insert the replacement power supply module into the chassis then push it inwards until the latch locks into place.

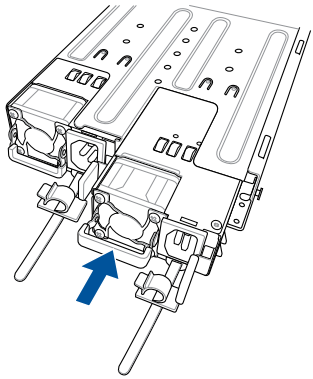

2.9.3 Replacing optical drive (optional for RS700A-E9-RS4)

This server system supports a slim-type optical disk drive.

To replace the optical disk drive:

1. Remove the screw that secures the optical drive and set it aside.

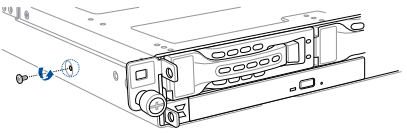

2. Push the spring lock to the right (A) to remove the SATA/SAS storage device tray, then pull the tray lever outward (B).

   The storage device tray ejects slightly after you pull out the lever (C).

3. Hold the tray lever and pull the storage device tray out of the bay.

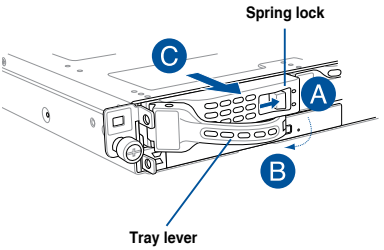

4. Pull the optical drive module out of the drive bay.

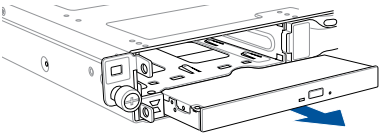

5. Carefully insert the replacement optical disk drive module into the drive bay until it is securely seated in place.

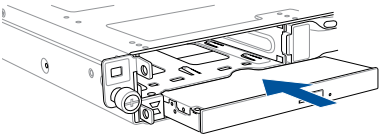

6. Carefully insert the storage device tray and push it all the way to the depth of the bay until just a small fraction of the tray edge protrudes.

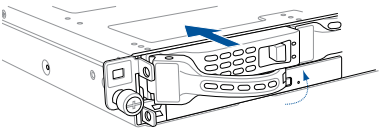

7. Push the tray lever until it clicks, and secure the storage device tray in place. The storage device tray is correctly placed when its front edge aligns with the bay edge.

8. Secure the optical drive with the screw that you removed in step 1.

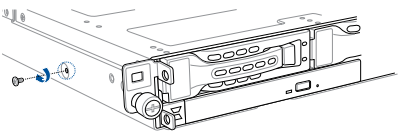

3 Installation Options

This chapter describes how to install the optional components and devices into the barebone server.

3.1 Tool-less Friction Rail Kit

The tool less design of the rail kit allows you to easily install the rack rails into the server rack without the need for additional tools. The kit also comes with a metal stopping bracket that can be installed to provide additional support and stability to the server.

The tool-less rail kit package includes:

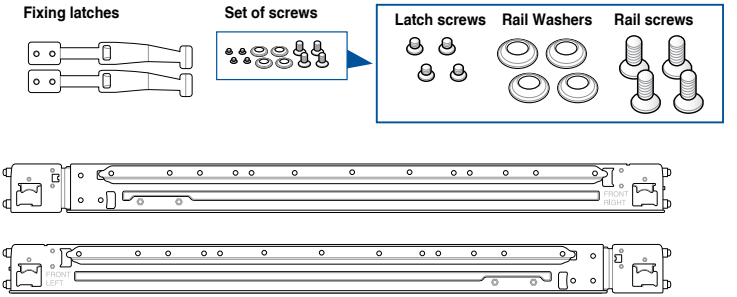

Installing the tool-less rack rail

To install the tool-less rack rails into the rack:

1. Secure the two fixing latches to the two sides of the server using the set of latch screws.

The locations of the screw holes vary with different server models. Refer to your server user manual for details.

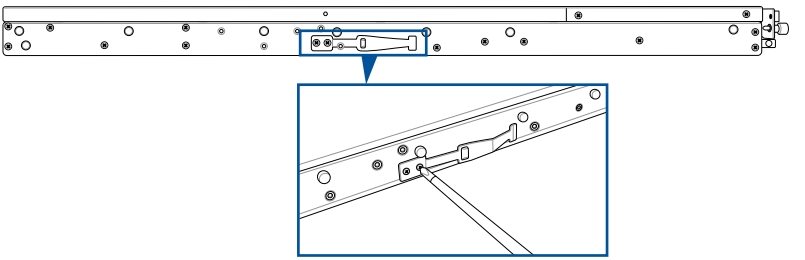

2. Select a desired space and place the appropriate rack rail (left and right) on opposite positions on the rack.

A 1U space is consists of three square mounting holes with two thin lips on the top and the bottom.

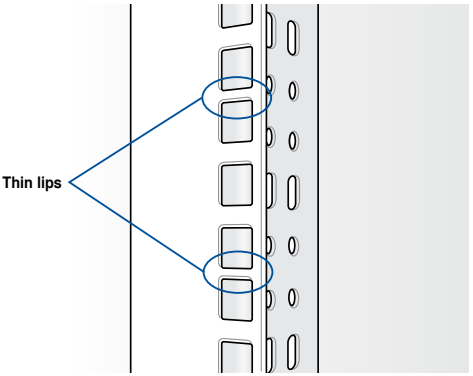

3. Press the spring lock, then insert the studs into the selected square mounting holes on the rack post.
4. Press the spring lock on the other end of rail then insert the stud into the mounting hole on the rack post. Extend the rack rail, if necessary.
5. Perform steps 3 to 4 for the other rack rail.

Ensure that the installed rack rails (left and right) are aligned, secured, and stable in place.

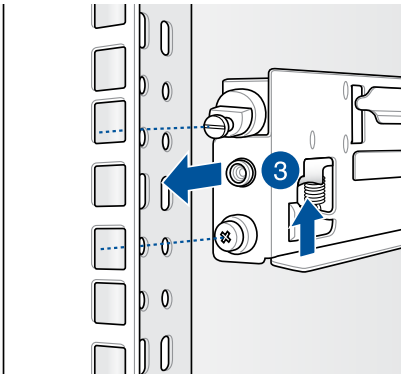

6. Lift the server chassis and insert it into the rack rail.

- Ensure that the rack rail cabinet and the rack posts are stable and standing firmly on a level surface.
- We strongly recommend that at least two able-bodied persons perform the steps described in this guide.
- We recommend the use of an appropriate lifting tool or device, if necessary.

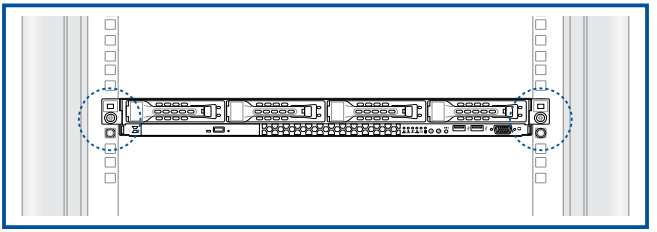

Ensure to include the side knots on the two sides of the server in the rack rail holders.

The illustrations shown above are for reference only.

3.2 Rail kit dimensions

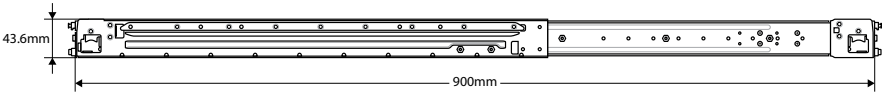

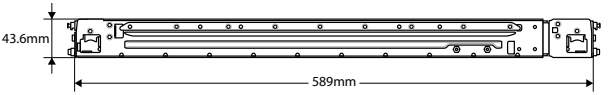

4 Motherboard Information

This chapter includes the motherboard layout and brief descriptions of the jumpers and internal connectors.

4.1 Motherboard layout

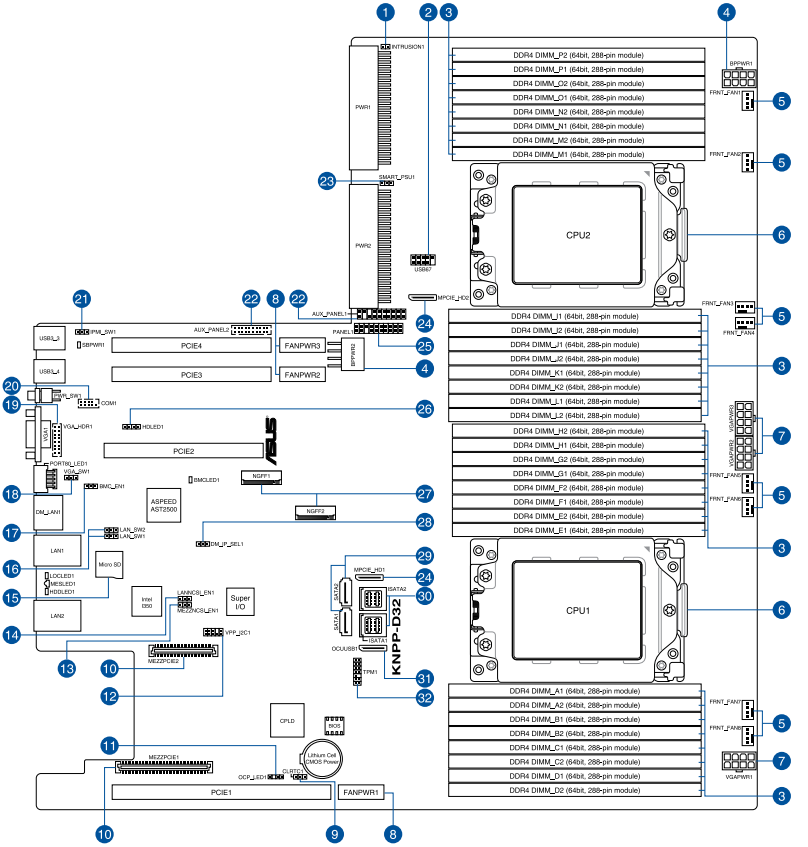

Layout contents

Internal connectors / Sockets / Jumpers / LEDs		Page
1.	Chassis Intrusion (2-pin INTRUSION1)	4-19
2.	USB 2.0 connector (10-1 pin USB67)	4-14
3.	DDR4 DIMM sockets	2-7
4.	Back panel power connectors (8-pin BPPWR1-2)	4-18
5.	System fan connectors (4-pin FRNT_FAN1-8)	4-15
6.	CPU socket	2-3
7.	VGA power connectors (8-pin VGAPWR1-3)	4-18
8.	Fan power connectors (FANPWR1-3)	4-14
9.	Clear RTC RAM (3-pin CLRTC1)	4-4
10.	Mezzanine PCIE card connectors (MEZZPCIE1-2)	4-20
11.	OCP LAN Activity LED connector (4-1 pin OCP_LED1)	4-22
12.	VPP_I2C1 connector (10-1 pin VPP_I2C1)	4-22
13.	MEZZNCSI setting (3-pin MEZZNCSI_SEL1)	4-8
14.	LANNCSI setting (3-pin LANNCSI_SEL1)	4-7
15.	Micro SD card slot (MSD1)	4-21
16.	LAN controller setting (3-pin LAN_SW1-2)	4-5
17.	Baseboard Management Controller setting (3-pin BMC_EN1)	4-6
18.	VGA controller setting (3-pin VGA_SW1)	4-5
19.	VGA connector (16-pin VGA_HDR1)	4-19
20.	Serial port connector (10-1 pin COM1)	4-21
21.	IPMI SW setting (3-pin IPMI_SW1)	4-8
22.	Auxiliary panel connector (20-2 pin AUX_PANEL1, 20-pin AUX_PANEL2)	4-17
23.	Smart Ride Through (SmaRT) setting (3-pin SMART_PSU1)	4-6
24.	MPCIE_HD connectors (MPCIE_HD1-2)	4-13
25.	System panel connector (20-1 pin PANEL1)	4-16
26.	Storage device activity LED connector (4-pin HDLED1)	4-13
27.	M.2 (NGFF) card connectors (NGFF1-2)	4-20
28.	DMLAN setting (3-pin DM_IP_SEL1)	4-7
29.	Serial ATA connectors (7-pin SATA1-2)	4-12
30.	Mini-SAS HD connector (ISATA1-2)	4-12
31.	USB 3.0 connectors (OCUUSB1)	4-23
32.	TPM connector (14-1 pin TPM1)	4-15

4.2 Jumpers

1. Clear RTC RAM (3-pin CLRTC1)

This jumper allows you to clear the Real Time Clock (RTC) RAM in CMOS. You can clear the CMOS memory of date, time, and system setup parameters by erasing the CMOS RTC RAM data. The onboard button cell battery powers the RAM data in CMOS, which include system setup information such as system passwords.

To erase the RTC RAM:

1. Turn OFF the computer and unplug the power cord.
2. Move the jumper cap from pins 1–2 (default) to pins 2–3. Keep the cap on pins 2–3 for about 5–10 seconds, then move the cap back to pins 1–2.
3. Plug the power cord and turn ON the computer.
4. Hold down the <Del> key during the boot process and enter BIOS setup to re-enter data.

Except when clearing the RTC RAM, never remove the cap on CLRTC jumper default position. Removing the cap will cause system boot failure!

If the steps above do not help, remove the onboard battery and move the jumper again to clear the CMOS RTC RAM data. After the CMOS clearance, reinstall the battery.

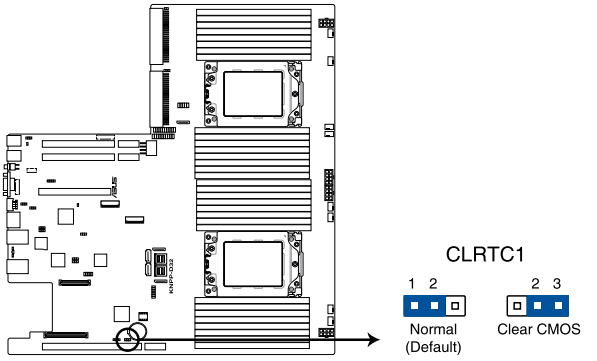

KNPP-D32 Clear RTC RAM

2. VGA controller setting (3-pin VGA_SW1)

This jumper allows you to enable or disable the onboard VGA controller. Set to pins 1–2 to activate the VGA feature.

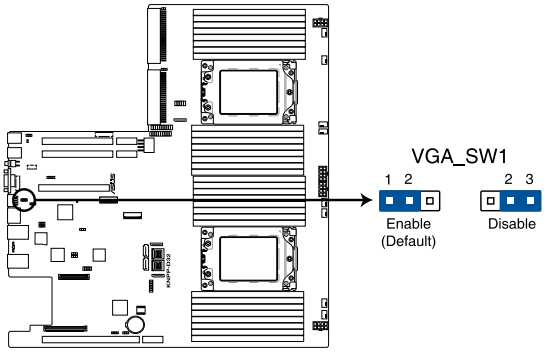

KNPP-D32 VGA setting

3. LAN controller setting (3-pin LAN_SW1-2)

These jumpers allow you to enable or disable the onboard Intel® I350-AM2 Gigabit LAN1/2 controller. Set to pins 1–2 to activate the Gigabit LAN feature.

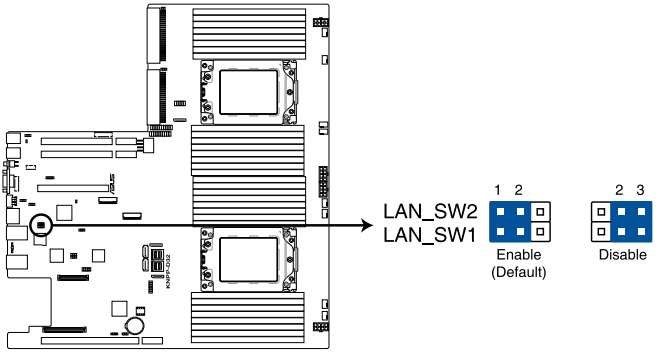

KNPP-D32 LAN setting

4. Baseboard Management Controller setting (3-pin BMC_EN1)

This jumper allows you to enable (default) or disable on-board BMC. Ensure to set this BMC jumper to enabled to avoid system fan control and hardware monitor error.

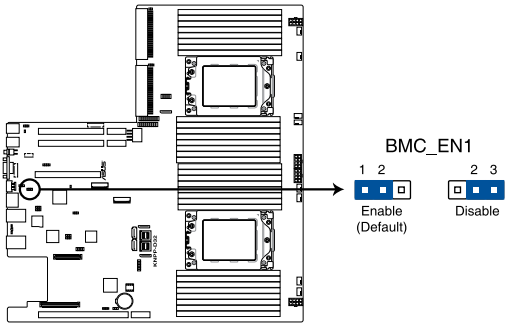

KNPP-D32 BMC setting

5. Smart Ride Through (SmaRT) setting (3-pin SMART_PSU1)

This jumper allows you to enable or disable the Smart Ride Through (SmaRT) function. This feature is enabled by default. Set to pins 2-3 to disable it. When enabled, SmaRT allows uninterrupted operation of the system during an AC loss event.

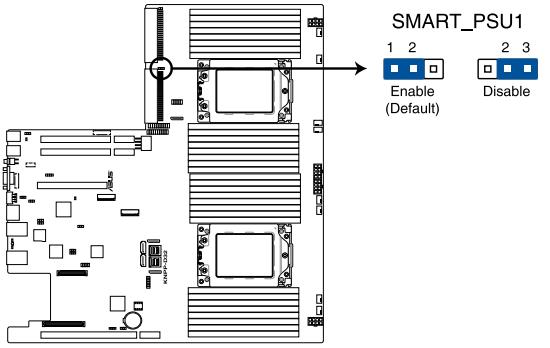

KNPP-D32 Smart Ride Through setting

6. DMLAN setting (3-pin DM_IP_SEL1)

This jumper allows you to select the DMLAN setting. Set to pins 2-3 to force the DMLAN IP to static mode (IP=10.10.10.10, submask=255.255.255.0).

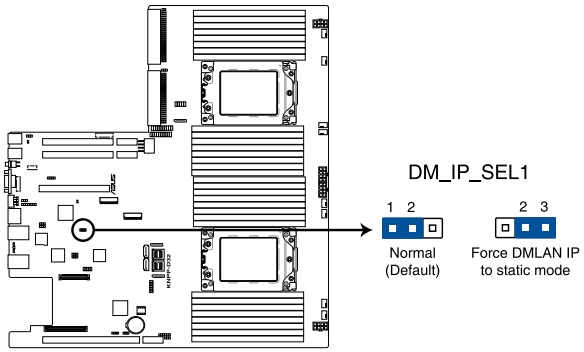

KNPP-D32 DM_IP_SEL1 setting

7. LANNCSI setting (3-pin LANNCSI_SEL1)

This jumper allows you to select which LAN NCSI function to use.

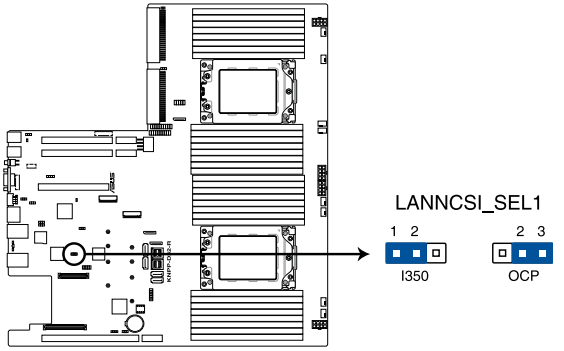

KNPP-D32-R LANNCSI_SEL1 setting

8. MEZZNCSI setting (3-pin MEZZNCSI_SEL1)

This jumper allows you to enable or disable the MEZZ NCSI.

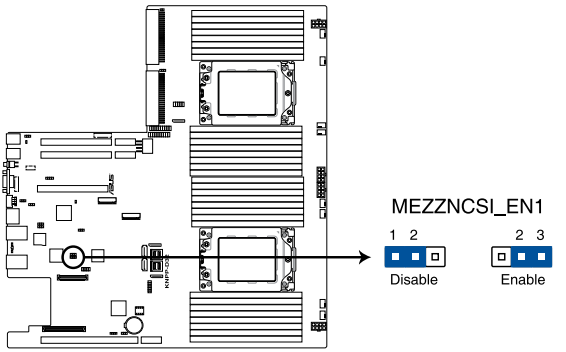

KNPP-D32 MEZZNCSI_EN1 setting

9. IPMI SW setting (3-pin IPMI_SW1)

This jumper allows you to select which protocol in the GPU sensor to function.

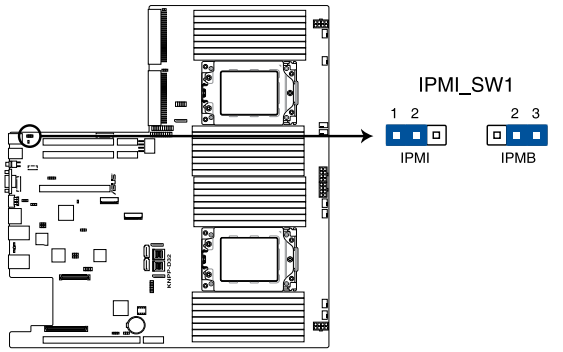

KNPP-D32 IPMI_SW1 setting

4.3 Internal LEDs

1. Standby Power LED (SBPWR1)

The motherboard comes with a standby power LED. The green LED lights up to indicate that the system is ON, in sleep mode, or in soft-off mode. This is a reminder that you should shut down the system and unplug the power cable before removing or plugging in any motherboard component. The illustration below shows the location of the onboard LED.

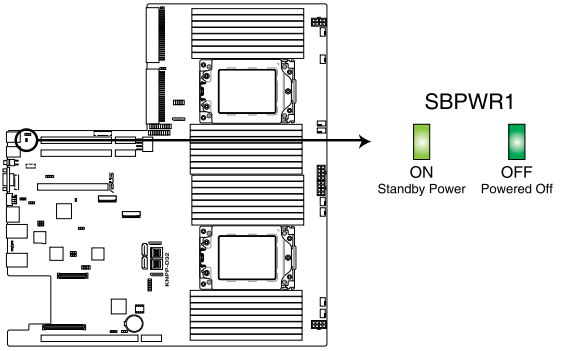

KNPP-D32 Standby Power LED

2. Location LED (LOCLED1)

This onboard LED lights up when the Location button on the server is pressed or when triggered by a system management software. The Location LED helps visually locate and quickly identify the server in error on a server rack.

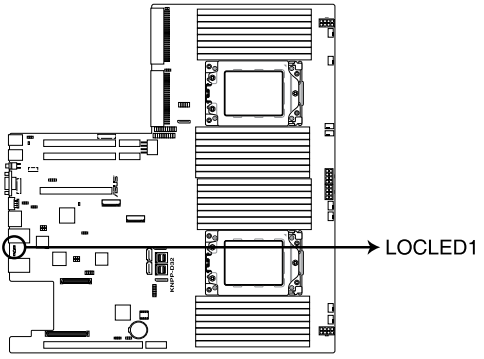

KNPP-D32 Location LED

3. Storage device activity LED (HDDLED1)

This LED is reserved for the storage devices connected to the onboard M.2, or SATA/SAS add-on card. The read or write activities of any device connected to the onboard M.2, or SATA/SAS add-on card causes the rear panel LED to light up.

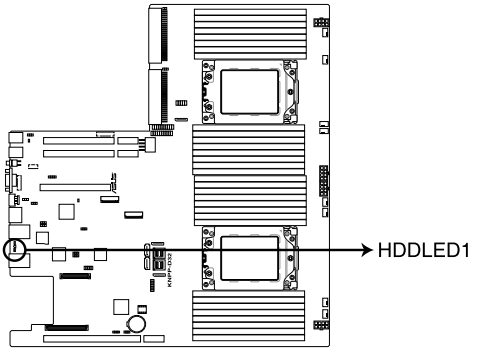

KNPP-D32 Storage device activity LED

4. Message LED (MESLED1)

This onboard LED lights up to red when there is a BMC event log is generated.

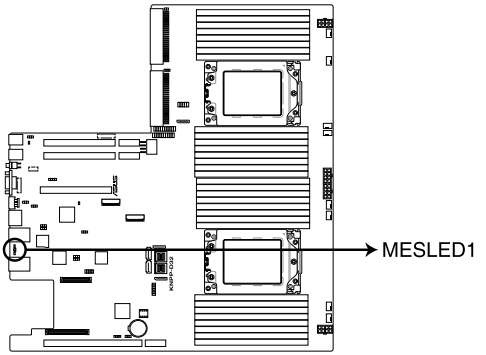

KNPP-D32 MESLED

5. BMC LED (BMCLED1)

The BMC LED lights up to indicate that the on-board BMC is functional.

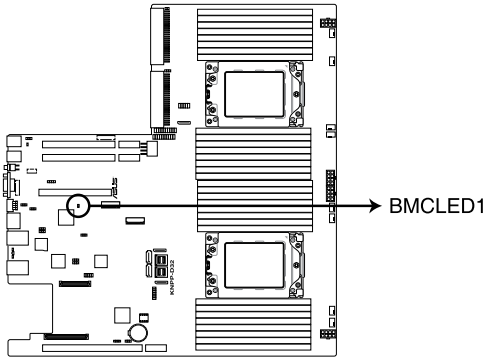

KNPP-D32 BMC LED

4.4 Internal connectors

1. Serial ATA connectors (7-pin SATA1-2)

These connectors, controlled by AMD integrated SATA controller, are for the Serial ATA signal cables for Serial ATA drives (SATA 1 connector is used for the optical drive by default).

If the SATA M.2 (NGFF1) slot is occupied, the SSATA2 slot will be disabled.

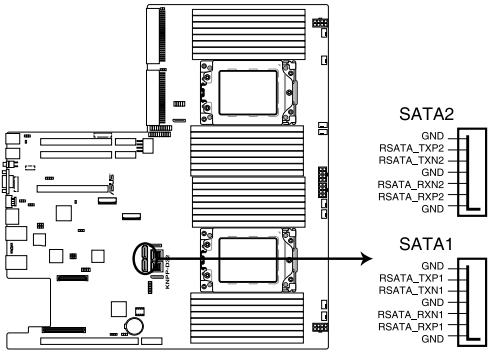

KNPP-D32 SATA connectors

2. Mini-SAS HD connector (ISATA1-2)

This motherboard comes with mini Serial Attached SCSI (SAS) HD connectors, the storage technology that supports Serial ATA. Each connector supports up to four devices.

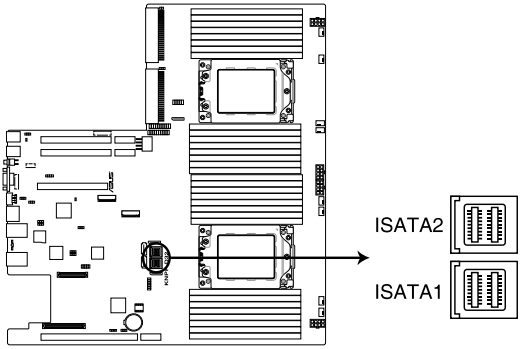

KNPP-D32 ISATA connectors

3. MPCIE_HD connectors (MPCIE_HD1-2)

The MPCIE_HD connectors allows you to connect NVME storage device.

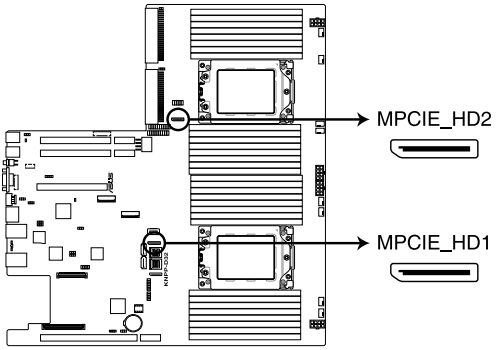

KNPP-D32 MPCIE_HD1 & MPCIE_HD2

4. Storage device activity LED connector (4-pin HDLED1)

This LED connector is for the storage add-on card cable connected to the SATA or SAS add-on card. The read or write activities of any device connected to the SATA or SAS add-on card causes the front panel LED to light up.

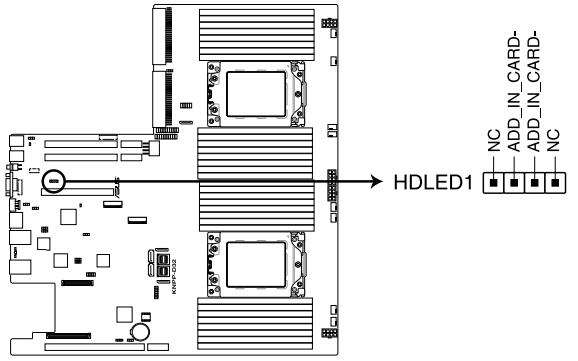

KNPP-D32 Storage device activity LED connector

5. USB 2.0 connector (10-1 pin USB67)

This connector is for USB 2.0 ports. Connect the USB module cable to the connector, and then install the module to a slot opening at the back of the system chassis. The USB connectors comply with USB 2.0 specification that supports up to 480 Mbps connection speed.

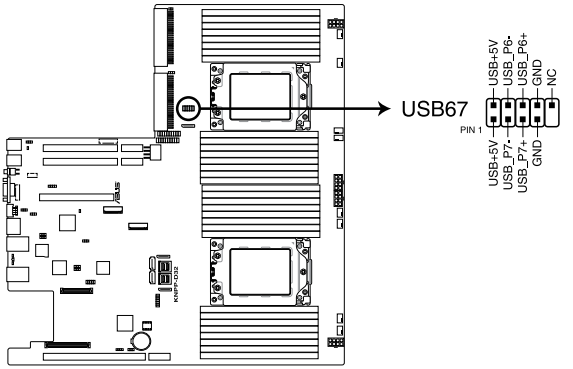

KNPP-D32 USB 2.0 connector

The USB port module is purchased separately.

6. Fan power connectors (FANPWR1-3)

These connectors are for the power supply plugs that connects to additional fans. The power supply plugs are designed to fit these connectors in only one orientation. Find the proper orientation and push down firmly until the connectors completely fit.

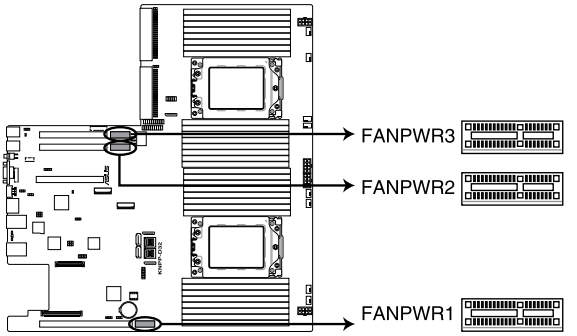

KNPP-D32 FANPWR

7. System fan connectors (4-pin FRNT_FAN1-8)

The fan connectors support cooling fans of 0.8A–1.0A (12 W max.) or a total of 6.4 A–8.0 A (96 W max.) at +12V. Connect the fan cables to the fan connectors on the motherboard, making sure that the black wire of each cable matches the ground pin of the connector.

DO NOT forget to connect the fan cables to the fan connectors. Insufficient air flow inside the system may damage the motherboard components. These are not jumpers! DO NOT place jumper caps on the fan connectors!

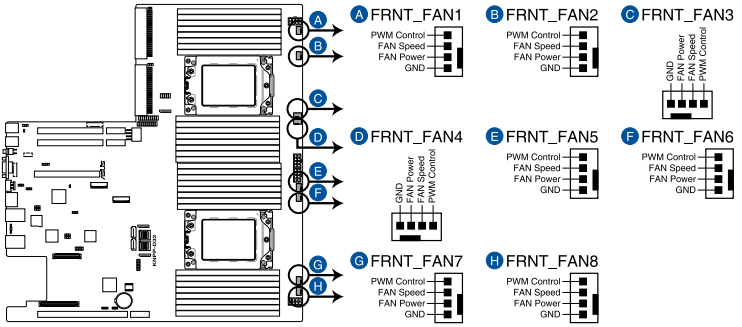

KNPP-D32 FAN connectors

8. TPM connector (14-1 pin TPM1)

This connector supports a Trusted Platform Module (TPM) system, which can securely store keys, digital certificates, passwords, and data. A TPM system also helps enhance network security, protects digital identities, and ensures platform integrity.

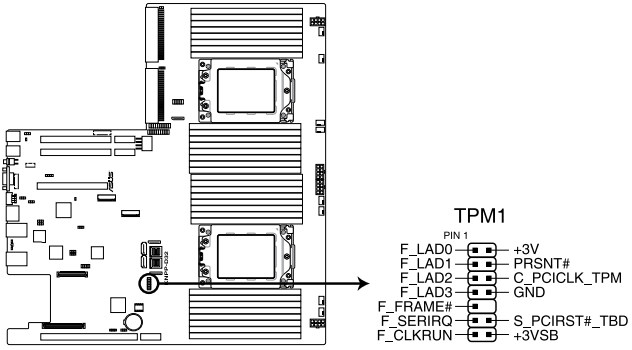

KNPP-D32 TPM connector

9. System panel connector (20-1 pin PANEL1)

This connector supports several chassis-mounted functions.

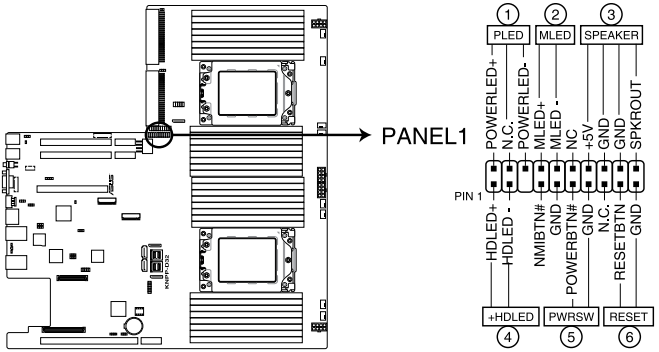

KNPP-D32 System panel connector

1. System power LED (3-pin PLED)

This 3-pin connector is for the system power LED. Connect the chassis power LED cable to this connector. The system power LED lights up when you turn on the system power, and blinks when the system is in sleep mode.

2. Message LED (2-pin MLED)

This 2-pin connector is for the message LED cable that connects to the front message LED. The message LED is controlled by the BMC to indicate an abnormal event occurrence.

3. System warning speaker (4-pin SPEAKER)

This 4-pin connector is for the chassis-mounted system warning speaker. The speaker allows you to hear system beeps and warnings.

4. Storage device activity LED (2-pin HDLED)

This 2-pin connector is for the storage device activity LED. Connect the storage device activity LED cable to this connector. The LED lights up or flashes when data is read from or written to the storage device.

5. ATX power button/soft-off button (2-pin PWRSW)

This connector is for the system power button. Pressing the power button turns the system on or puts the system in sleep or soft-off mode depending on the BIOS settings. Pressing the power switch for more than four seconds while the system is ON turns the system OFF.

6. Reset button (2-pin RESET)

This 2-pin connector is for the chassis-mounted reset button for system reboot without turning off the system power.

10. Auxiliary panel connector (20-2 pin AUX_PANEL1, 20-pin AUX_PANEL2)

This connector is for additional front panel features including front panel SMB, locator LED and switch, chassis intrusion, and LAN LEDs.

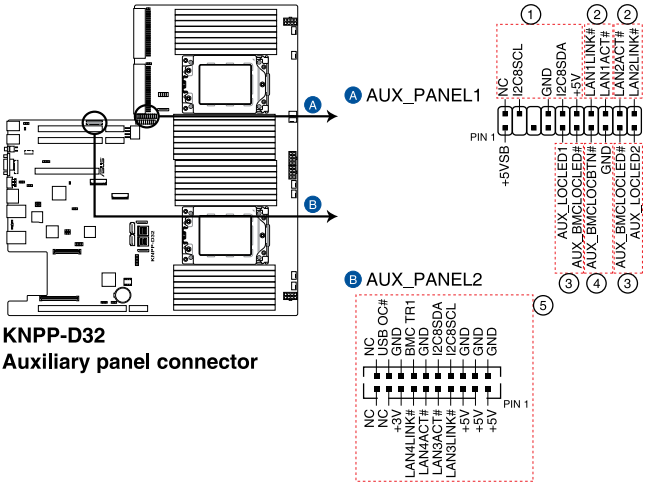

KNPP-D32
Auxiliary panel connector

1. Front panel SMB (6-1 pin FPSMB)

This 6-1 pin connector is for the front panel SMBus cable.

2. LAN activity LED (2-pin LAN1_LED, LAN2_LED)

This 2-pin connector is for the Gigabit LAN activity LEDs on the front panel.

3. Locator LED (2-pin LOCATORLED1, 2-pin LOCATORLED2)

This 2-pin connector is for the locator LED1 and LED2 on the front panel. Connect the Locator LED cables to these 2-pin connector. The LEDs will light up when the Locator button is pressed.

4. Locator Button/Switch (2-pin LOCATORBTN)

This 2-pin connector is for the locator button on the front panel. This button queries the state of the system locator.

5. LAN activity LED and USB port (2-pin LAN3_LED, LAN4_LED, USB ports)

These 2-pin connectors are for the Gigabit LAN activity LEDs and USB ports on the front panel.

11. Back panel power connectors (8-pin BPPWR1-2)

These connectors are for the power supply plugs that connects to the back panel. The power supply plugs are designed to fit these connectors in only one orientation. Find the proper orientation and push down firmly until the connectors completely fit.

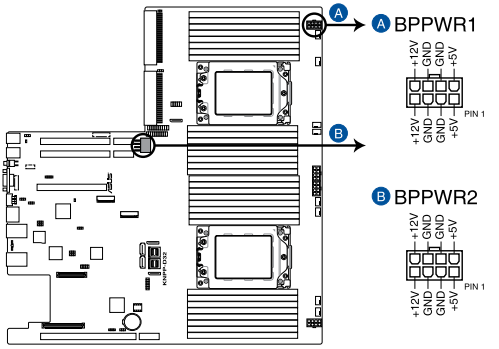

KNPP-D32 BP power connectors

DO NOT connect VGA cards to these connectors. Doing so may cause system boot errors and permanent damage to your motherboard or device.

12. VGA power connectors (8-pin VGAPWR1-3)

These connectors are for the power supply plugs that connects to the VGA card. The power supply plugs are designed to fit these connectors in only one orientation. Find the proper orientation and push down firmly until the connectors completely fit.

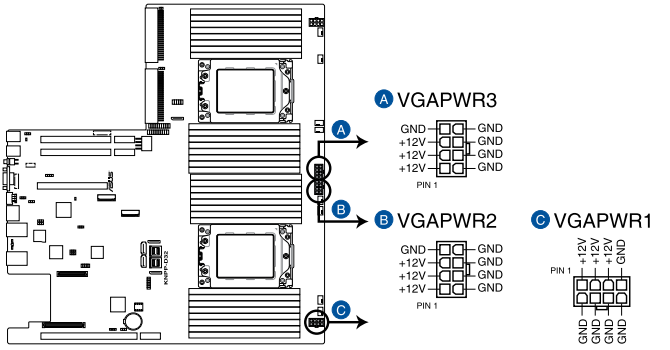

KNPP-D32 VGA power connectors

DO NOT connect the back panel to these connectors. Doing so may cause system boot errors and permanent damage to your motherboard or device.

13. VGA connector (16-pin VGA_HDR1)

This connector supports the VGA High Dynamic-Range interface.

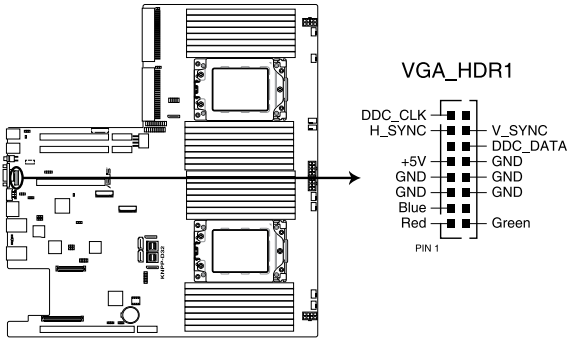

KNPP-D32 Internal VGA connector

14. Chassis Intrusion (2-pin INTRUSION1)

These leads are for the intrusion detection feature for chassis with intrusion sensor or microswitch. When you remove any chassis component, the sensor triggers and sends a high level signal to these leads to record a chassis intrusion event. The default setting is to short the CHASSIS# and the GND pin by a jumper cap to disable the function.

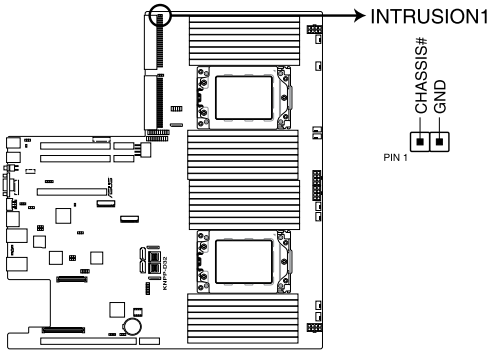

KNPP-D32 Chassis Intrusion connector

15. Mezzanine PCIE card connectors (MEZZPCIE1-2)

The MEZZPCIE1-2 connector supports Open Compute Project (OCP) cards.

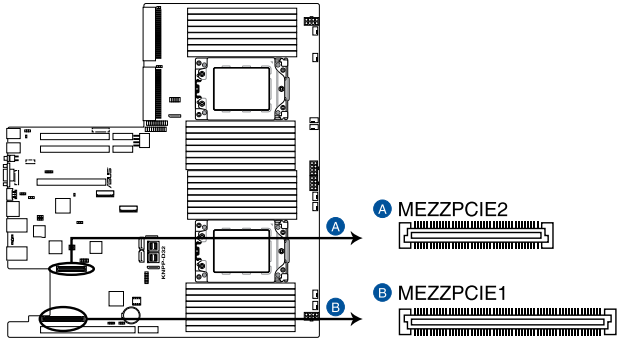

KNPP-D32 MEZZPCIE connectors

16. M.2 (NGFF) card connectors (NGFF1-2)

These connectors allow you to install M.2 devices.

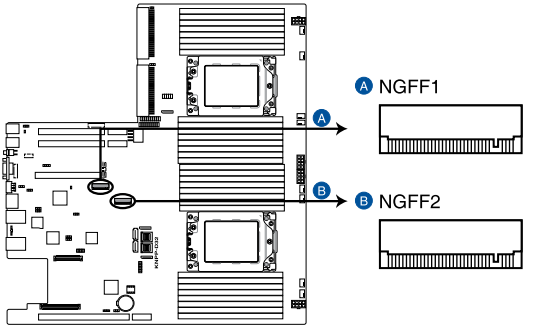

KNPP-D32 NGFF connectors

- This connector supports type 2242 / 2260 / 2280 / 22110 devices on both PCI-E and SATA interface.
- If the SATA M.2 (NGFF1) slot is occupied, the SSATA2 slot will be disabled.

The M.2 (NGFF) device is purchased separately

17. Serial port connector (10-1 pin COM1)

This connector is for a serial (COM) port. Connect the serial port module cable to this connector, then install the module to a slot opening at the back of the system chassis.

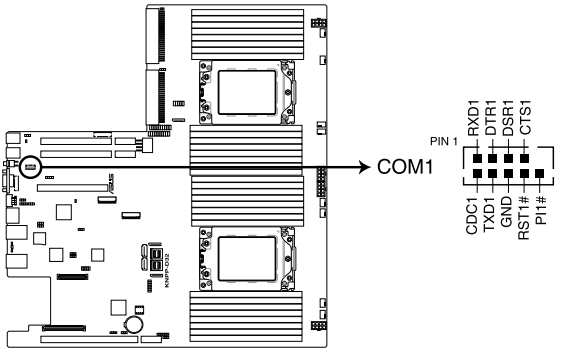

KNPP-D32 Serial port connector

The COM module is purchased separately.

18. Micro SD card slot (MSD1)

Your motherboard supports SD Memory Card v2.00 (SDHC) / v3.00 (SDXC).

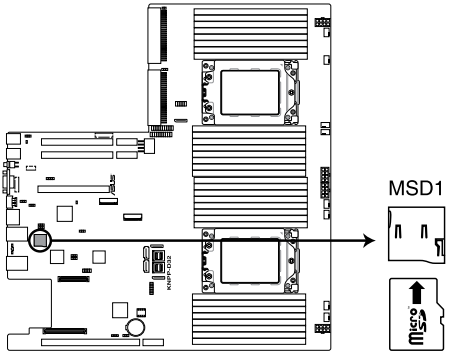

KNPP-D32 MSD1

Disconnect all power (including redundant PSUs) from the existing system before you add or remove a Memory Card, then reboot the system to access the Memory Card.

Some memory cards may not be compatible with your motherboard. Ensure that you use only compatible memory cards to prevent loss of data, damage to your device, or memory card, or both.

19. OCP LAN Activity LED connector (4-1 pin OCP_LED1)

OCP LAN LED connector supports OCP LAN card Active LED.

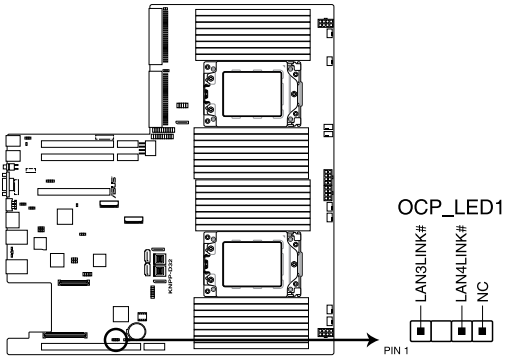

KNPP-D32 OCP_LED1 connector

20. VPP_I2C1 connector (10-1 pin VPP_I2C1)

This connector is used for the Intel VMD function and sensor readings.

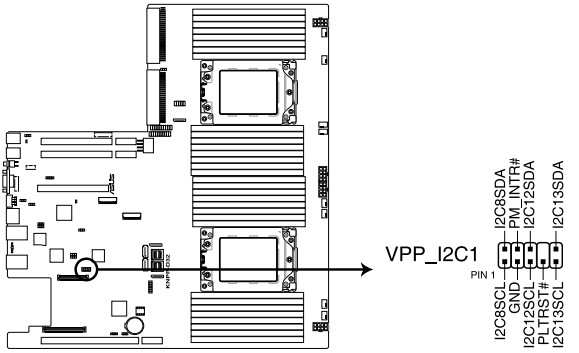

KNPP-D32 VPP_I2C1 connector

21. USB 3.0 connectors (OCUUSB1)

Connect a compatible USB module cable to the OCUUSB1 connector, and then install the module to a slot opening at the back or front of the system chassis. You can enjoy all the benefits of USB 3.0 including faster data transfer speeds of up to 5 Gbps, faster charging time for USB-chargeable devices, optimized power efficiency, and backward compatibility with USB 2.0. (OCUUSB1 connector is used for the front USB panel by default).

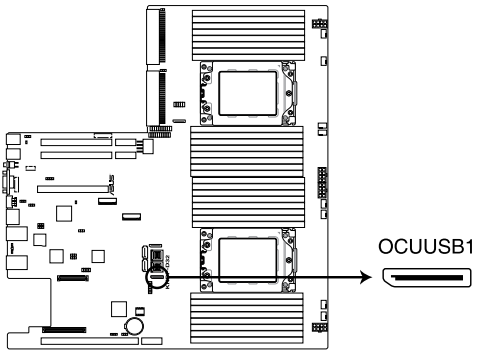

KNPP-D32 OCUUSB1

The USB port module is purchased separately.

4.5 Motherboard layout (revised motherboard)

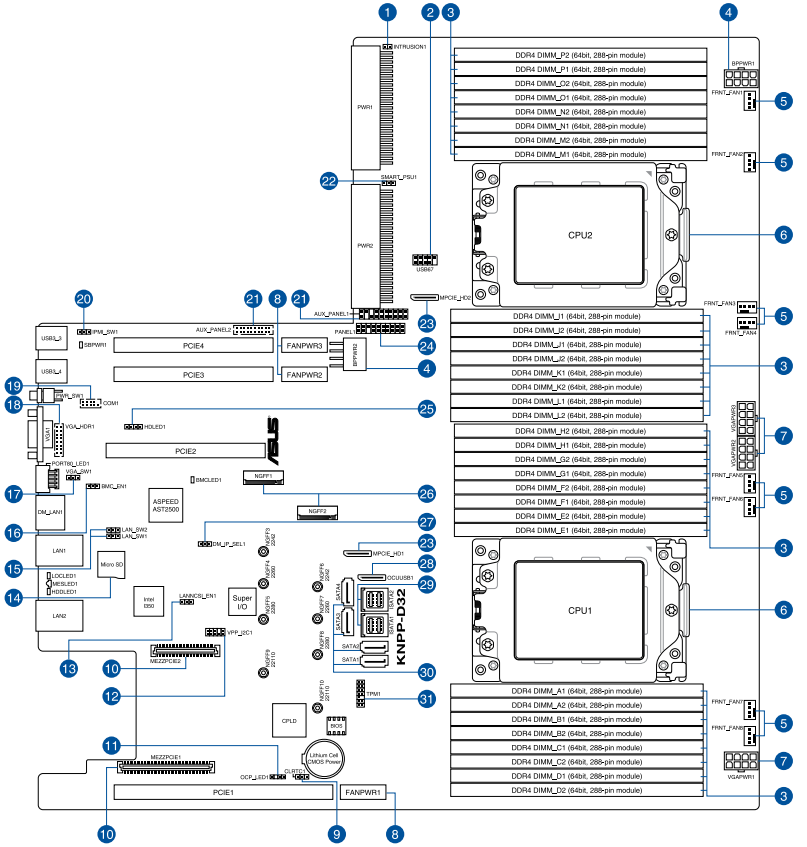

Layout contents

Internal connectors / Sockets / Jumpers / LEDs		Page
1.	Chassis Intrusion (2-pin INTRUSION1)	4-41
2.	USB 2.0 connector (10-1 pin USB67)	4-36
3.	DDR4 DIMM sockets	2-7
4.	Back panel power connectors (8-pin BPPWR1-2)	4-40
5.	System fan connectors (4-pin FRNT_FAN1-8)	4-37
6.	CPU socket	2-3
7.	VGA power connectors (8-pin VGAPWR1-3)	4-40
8.	Fan power connectors (FANPWR1-3)	4-36
9.	Clear RTC RAM (3-pin CLRTC1)	4-26
10.	Mezzanine PCIE card connectors (MEZZPCIE1-2)	4-42
11.	OCP LAN Activity LED connector (4-1 pin OCP_LED1)	4-44
12.	VPP_I2C1 connector (10-1 pin VPP_I2C1)	4-44
13.	LANNCSI setting (3-pin LANNCSI_SEL1)	4-29
14.	Micro SD card slot (MSD1)	4-43
15.	LAN controller setting (3-pin LAN_SW1-2)	4-27
16.	Baseboard Management Controller setting (3-pin BMC_EN1)	4-28
17.	VGA controller setting (3-pin VGA_SW1)	4-27
18.	VGA connector (16-pin VGA_HDR1)	4-41
19.	Serial port connector (10-1 pin COM1)	4-43
20.	IPMI SW setting (3-pin IPMI_SW1)	4-30
21.	Auxiliary panel connector (20-2 pin AUX_PANEL1, 20-pin AUX_PANEL2)	4-39
22.	Smart Ride Through (SmaRT) setting (3-pin SMART_PSU1)	4-28
23.	MPCIE_HD connectors (MPCIE_HD1-2)	4-35
24.	System panel connector (20-1 pin PANEL1)	4-38
25.	Storage device activity LED connector (4-pin HDLED1)	4-35
26.	M.2 (NGFF) card connectors (NGFF1-2)	4-42
27.	DMLAN setting (3-pin DM_IP_SEL1)	4-29
28.	USB 3.0 connectors (OCUUSB1)	4-45
29.	Mini-SAS HD connector (ISATA1-2)	4-34
30.	Serial ATA connectors (7-pin SATA1-4)	4-34
31.	TPM connector (14-1 pin TPM1)	4-37

4.6 Jumpers (revised motherboard)

1. Clear RTC RAM (3-pin CLRTC1)

This jumper allows you to clear the Real Time Clock (RTC) RAM in CMOS. You can clear the CMOS memory of date, time, and system setup parameters by erasing the CMOS RTC RAM data. The onboard button cell battery powers the RAM data in CMOS, which include system setup information such as system passwords.

To erase the RTC RAM:

1. Turn OFF the computer and unplug the power cord.
2. Move the jumper cap from pins 1–2 (default) to pins 2–3. Keep the cap on pins 2–3 for about 5–10 seconds, then move the cap back to pins 1–2.
3. Plug the power cord and turn ON the computer.
4. Hold down the <Del> key during the boot process and enter BIOS setup to re-enter data.

Except when clearing the RTC RAM, never remove the cap on CLRTC jumper default position. Removing the cap will cause system boot failure!

If the steps above do not help, remove the onboard battery and move the jumper again to clear the CMOS RTC RAM data. After the CMOS clearance, reinstall the battery.

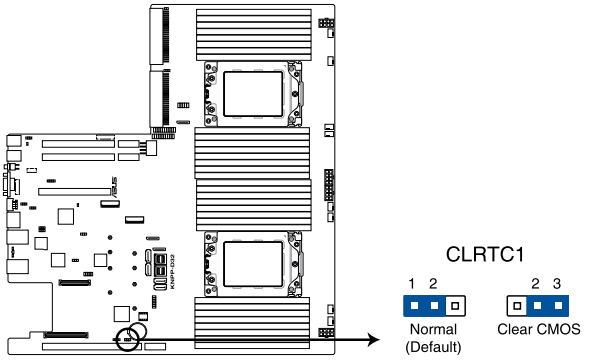

KNPP-D32 Clear RTC RAM

2. VGA controller setting (3-pin VGA_SW1)

This jumper allows you to enable or disable the onboard VGA controller. Set to pins 1–2 to activate the VGA feature.

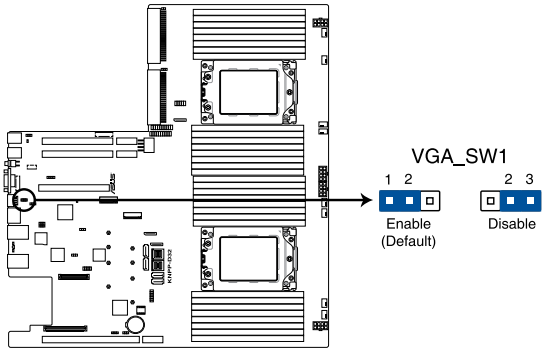

KNPP-D32 VGA setting

3. LAN controller setting (3-pin LAN_SW1-2)

These jumpers allow you to enable or disable the onboard Intel® I350-AM2 Gigabit LAN1/2 controller. Set to pins 1–2 to activate the Gigabit LAN feature.

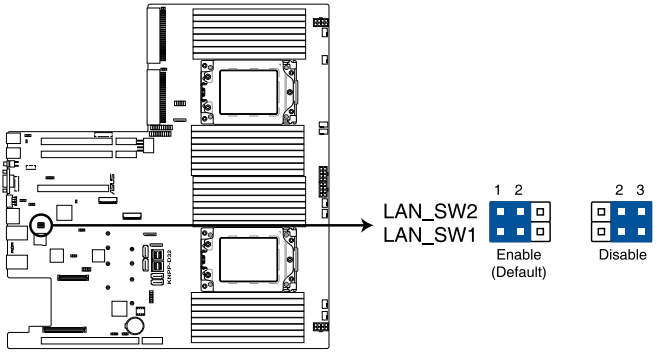

KNPP-D32 LAN setting

4. Baseboard Management Controller setting (3-pin BMC_EN1)

This jumper allows you to enable (default) or disable on-board BMC. Ensure to set this BMC jumper to enabled to avoid system fan control and hardware monitor error.

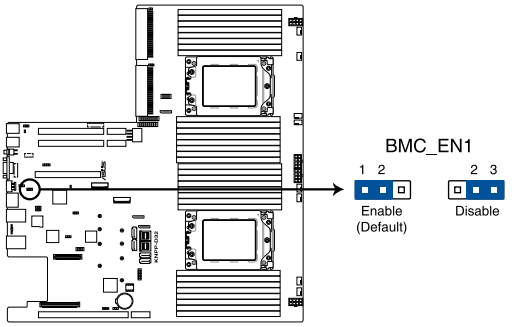

KNPP-D32 BMC setting

5. Smart Ride Through (SmaRT) setting (3-pin SMART_PSU1)

This jumper allows you to enable or disable the Smart Ride Through (SmaRT) function. This feature is enabled by default. Set to pins 2-3 to disable it. When enabled, SmaRT allows uninterrupted operation of the system during an AC loss event.

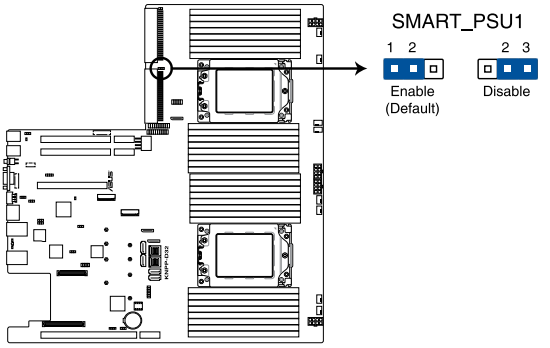

KNPP-D32 Smart Ride Through setting

6. DMLAN setting (3-pin DM_IP_SEL1)

This jumper allows you to select the DMLAN setting. Set to pins 2-3 to force the DMLAN IP to static mode (IP=10.10.10.10, submask=255.255.255.0).

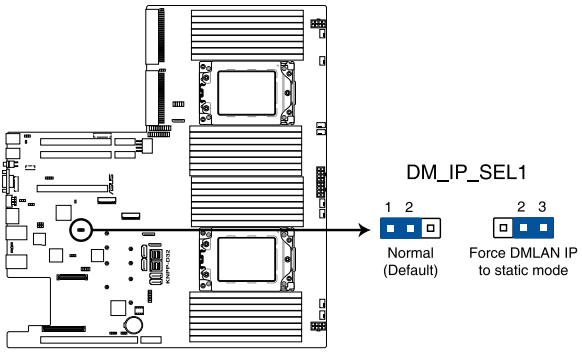

KNPP-D32 DM_IP_SEL1 setting

7. LANNCSI setting (3-pin LANNCSI_SEL1)

This jumper allows you to enable or disable the LAN NCSI.

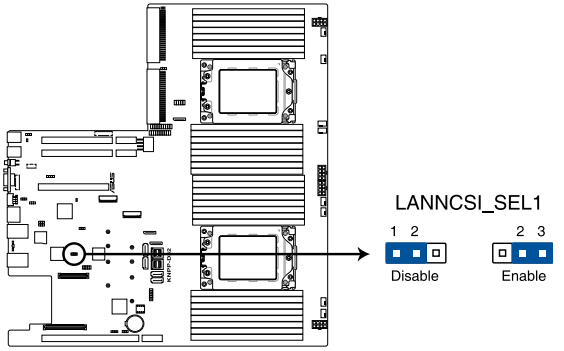

KNPP-D32 LANNCSI_SEL1 setting

8. IPMI SW setting (3-pin IPMI_SW1)

This jumper allows you to select which protocol in the GPU sensor to function.

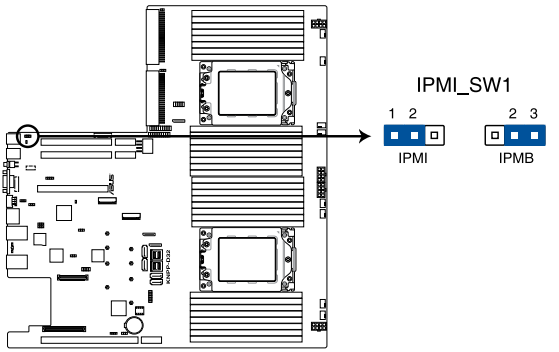

KNPP-D32 IPMI_SW1 setting

4.7 Internal LEDs (revised motherboard)

1. Standby Power LED (SBPWR1)

The motherboard comes with a standby power LED. The green LED lights up to indicate that the system is ON, in sleep mode, or in soft-off mode. This is a reminder that you should shut down the system and unplug the power cable before removing or plugging in any motherboard component. The illustration below shows the location of the onboard LED.

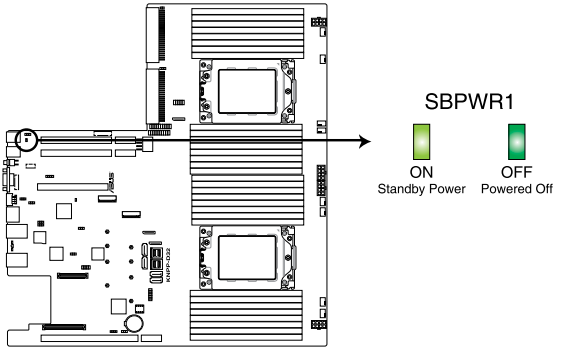

KNPP-D32 Standby Power LED

2. Location LED (LOCLED1)

This onboard LED lights up when the Location button on the server is pressed or when triggered by a system management software. The Location LED helps visually locate and quickly identify the server in error on a server rack.

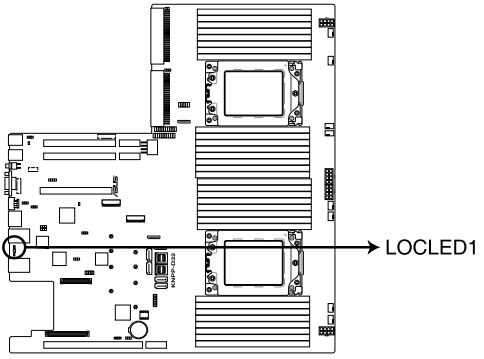

KNPP-D32 Location LED

3. Storage device activity LED (HDDLED1)

This LED is reserved for the storage devices connected to the onboard M.2, or SATA/SAS add-on card. The read or write activities of any device connected to the onboard M.2, or SATA/SAS add-on card causes the rear panel LED to light up.

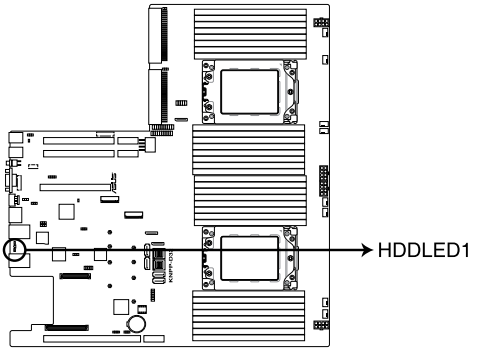

KNPP-D32 Storage device activity LED

4. Message LED (MESLED1)

This onboard LED lights up to red when there is a BMC event log is generated.

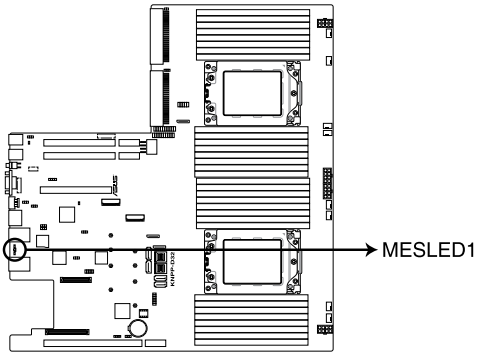

KNPP-D32 MESLED

5. BMC LED (BMCLED1)

The BMC LED lights up to indicate that the on-board BMC is functional.

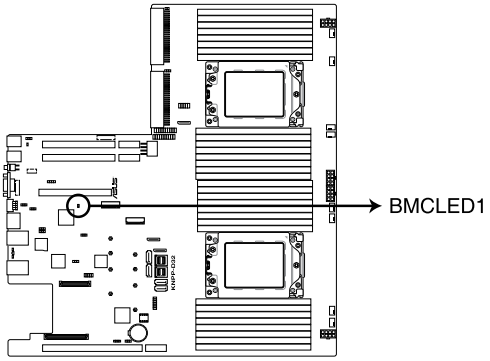

KNPP-D32 BMC LED

4.8 Internal connectors (revised motherboard)

1. Serial ATA connectors (7-pin SATA1-4)

These connectors, controlled by AMD integrated SATA controller, are for the Serial ATA signal cables for Serial ATA drives (SATA 1 connector is used for the optical drive by default).

If the SATA M.2 (NGFF1) slot is occupied, the SSATA2 slot will be disabled.

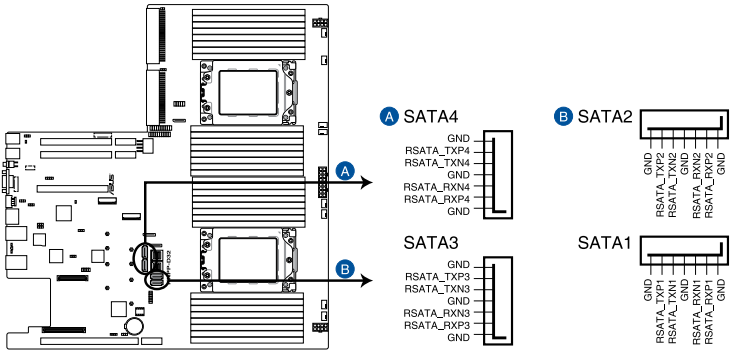

KNPP-D32 SATA connectors

2. Mini-SAS HD connector (ISATA1-2)

This motherboard comes with mini Serial Attached SCSI (SAS) HD connectors, the storage technology that supports Serial ATA. Each connector supports up to four devices.

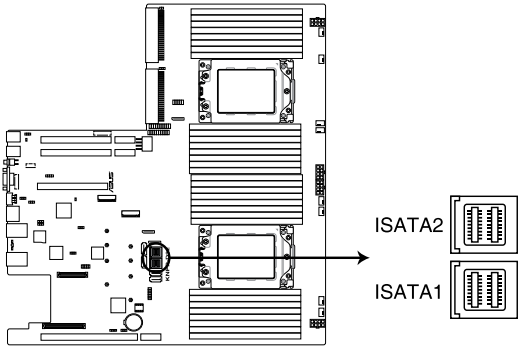

KNPP-D32 ISATA connectors

3. MPCIE_HD connectors (MPCIE_HD1-2)

The MPCIE_HD connectors allows you to connect NVME storage device.

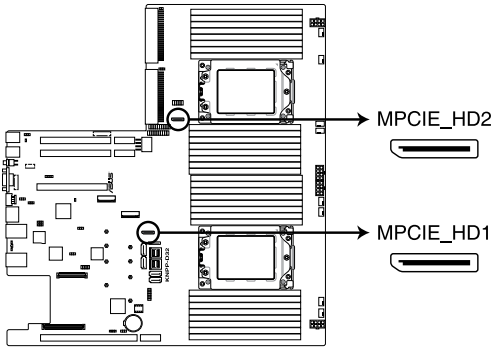

KNPP-D32 MPCIE_HD1 & MPCIE_HD2

4. Storage device activity LED connector (4-pin HDLED1)

This LED connector is for the storage add-on card cable connected to the SATA or SAS add-on card. The read or write activities of any device connected to the SATA or SAS add-on card causes the front panel LED to light up.

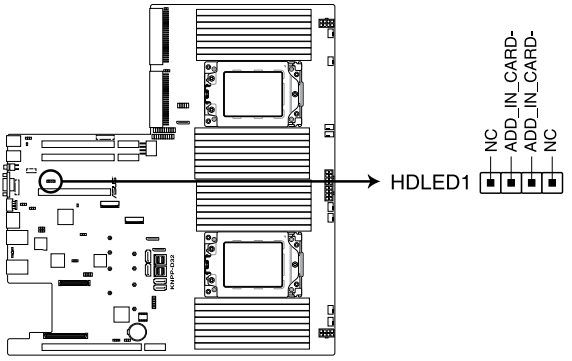

KNPP-D32 Storage device activity LED connector

5. USB 2.0 connector (10-1 pin USB67)

This connector is for USB 2.0 ports. Connect the USB module cable to the connector, and then install the module to a slot opening at the back of the system chassis. The USB connectors comply with USB 2.0 specification that supports up to 480 Mbps connection speed.

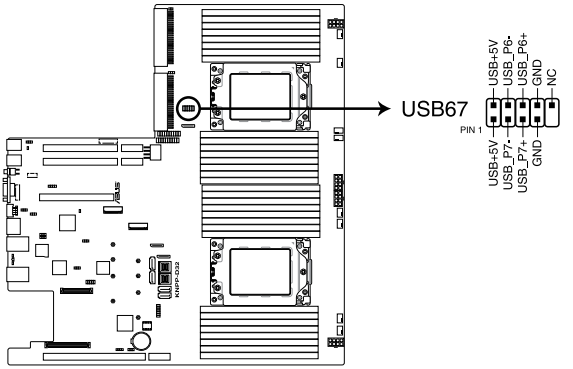

KNPP-D32 USB 2.0 connector

The USB port module is purchased separately.

6. Fan power connectors (FANPWR1-3)

These connectors are for the power supply plugs that connects to additional fans. The power supply plugs are designed to fit these connectors in only one orientation. Find the proper orientation and push down firmly until the connectors completely fit.

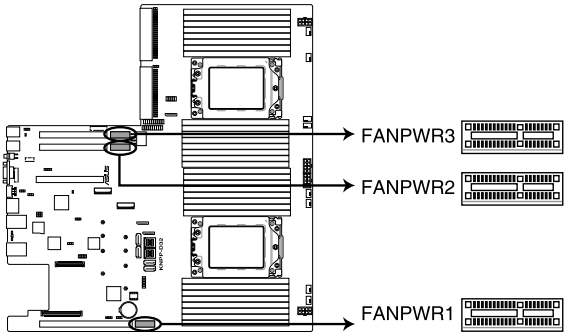

KNPP-D32 FANPWR

7. System fan connectors (4-pin FRNT_FAN1-8)

The fan connectors support cooling fans of 0.8A–1.0A (12 W max.) or a total of 6.4 A–8.0 A (96 W max.) at +12V. Connect the fan cables to the fan connectors on the motherboard, making sure that the black wire of each cable matches the ground pin of the connector.

DO NOT forget to connect the fan cables to the fan connectors. Insufficient air flow inside the system may damage the motherboard components. These are not jumpers! DO NOT place jumper caps on the fan connectors!

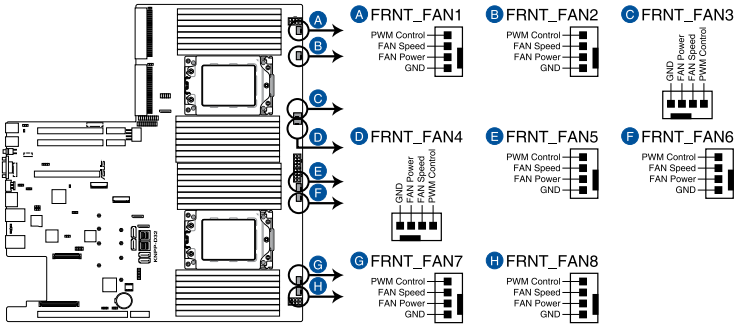

KNPP-D32 FAN connectors

8. TPM connector (14-1 pin TPM1)

This connector supports a Trusted Platform Module (TPM) system, which can securely store keys, digital certificates, passwords, and data. A TPM system also helps enhance network security, protects digital identities, and ensures platform integrity.

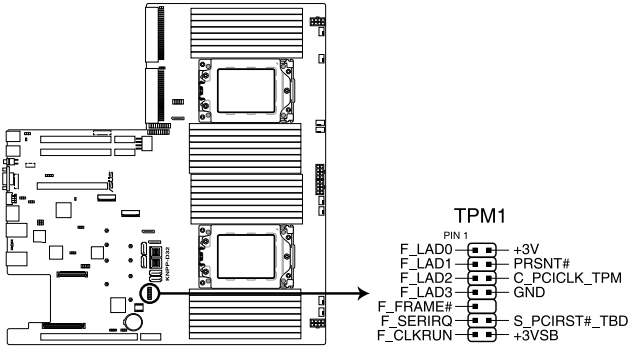

KNPP-D32 TPM connector

9. System panel connector (20-1 pin PANEL1)

This connector supports several chassis-mounted functions.

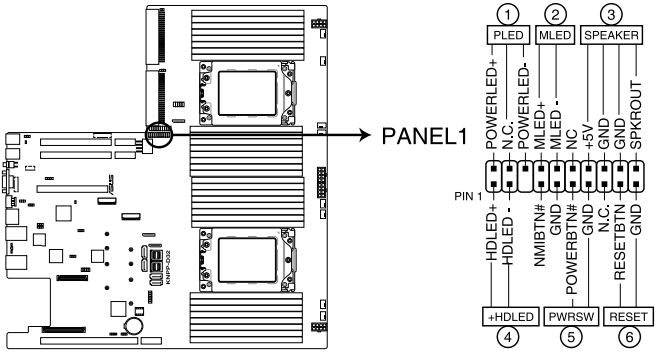

KNPP-D32 System panel connector

1. System power LED (3-pin PLED)

This 3-pin connector is for the system power LED. Connect the chassis power LED cable to this connector. The system power LED lights up when you turn on the system power, and blinks when the system is in sleep mode.

2. Message LED (2-pin MLED)

This 2-pin connector is for the message LED cable that connects to the front message LED. The message LED is controlled by the BMC to indicate an abnormal event occurrence.

3. System warning speaker (4-pin SPEAKER)

This 4-pin connector is for the chassis-mounted system warning speaker. The speaker allows you to hear system beeps and warnings.

4. Storage device activity LED (2-pin HDLED)

This 2-pin connector is for the storage device activity LED. Connect the storage device activity LED cable to this connector. The LED lights up or flashes when data is read from or written to the storage device.

5. ATX power button/soft-off button (2-pin PWRSW)

This connector is for the system power button. Pressing the power button turns the system on or puts the system in sleep or soft-off mode depending on the BIOS settings. Pressing the power switch for more than four seconds while the system is ON turns the system OFF.

6. Reset button (2-pin RESET)

This 2-pin connector is for the chassis-mounted reset button for system reboot without turning off the system power.

10. Auxiliary panel connector (20-2 pin AUX_PANEL1, 20-pin AUX_PANEL2)

This connector is for additional front panel features including front panel SMB, locator LED and switch, chassis intrusion, and LAN LEDs.

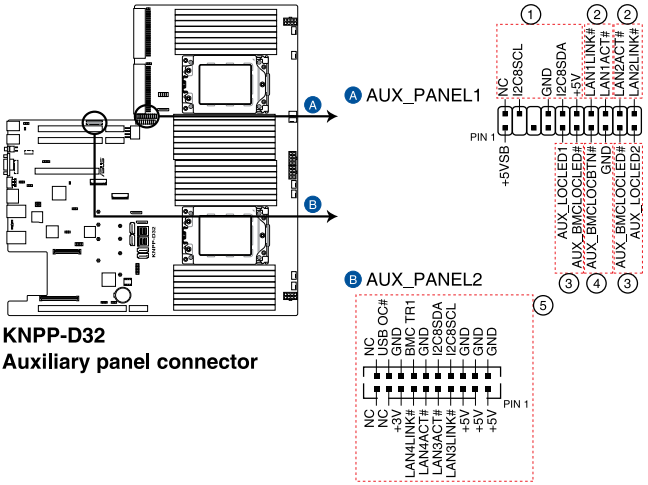

KNPP-D32
Auxiliary panel connector

1. Front panel SMB (6-1 pin FPSMB)

This 6-1 pin connector is for the front panel SMBus cable.

2. LAN activity LED (2-pin LAN1_LED, LAN2_LED)

This 2-pin connector is for the Gigabit LAN activity LEDs on the front panel.

3. Locator LED (2-pin LOCATORLED1, 2-pin LOCATORLED2)

This 2-pin connector is for the locator LED1 and LED2 on the front panel. Connect the Locator LED cables to these 2-pin connector. The LEDs will light up when the Locator button is pressed.

4. Locator Button/Switch (2-pin LOCATORBTN)

This 2-pin connector is for the locator button on the front panel. This button queries the state of the system locator.

5. LAN activity LED and USB port (2-pin LAN3_LED, LAN4_LED, USB ports)

These 2-pin connectors are for the Gigabit LAN activity LEDs and USB ports on the front panel.

11. Back panel power connectors (8-pin BPPWR1-2)

These connectors are for the power supply plugs that connects to the back panel. The power supply plugs are designed to fit these connectors in only one orientation. Find the proper orientation and push down firmly until the connectors completely fit.

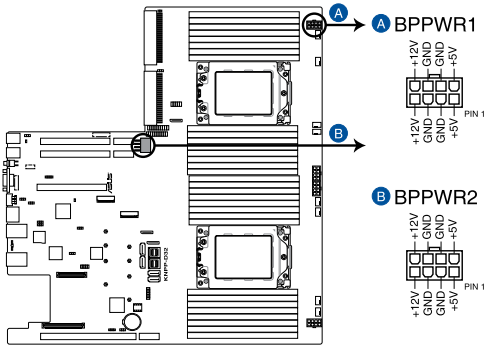

KNPP-D32 BP power connectors

DO NOT connect VGA cards to these connectors. Doing so may cause system boot errors and permanent damage to your motherboard or device.

12. VGA power connectors (8-pin VGAPWR1-3)

These connectors are for the power supply plugs that connects to the VGA card. The power supply plugs are designed to fit these connectors in only one orientation. Find the proper orientation and push down firmly until the connectors completely fit.

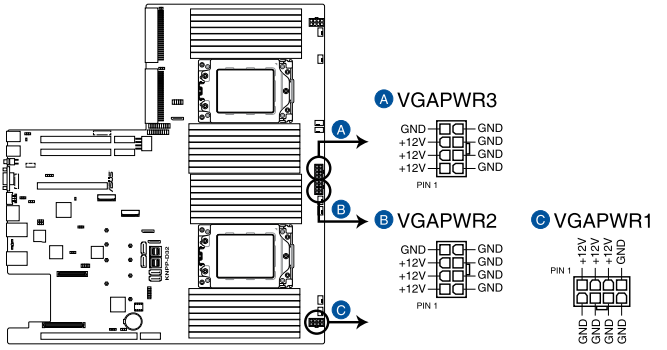

KNPP-D32 VGA power connectors

DO NOT connect the back panel to these connectors. Doing so may cause system boot errors and permanent damage to your motherboard or device.

13. VGA connector (16-pin VGA_HDR1)

This connector supports the VGA High Dynamic-Range interface.

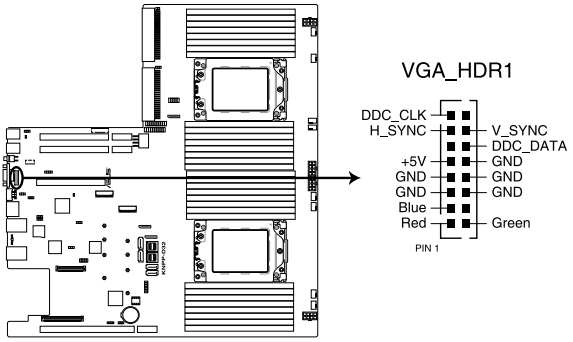

KNPP-D32 Internal VGA connector

14. Chassis Intrusion (2-pin INTRUSION1)

These leads are for the intrusion detection feature for chassis with intrusion sensor or microswitch. When you remove any chassis component, the sensor triggers and sends a high level signal to these leads to record a chassis intrusion event. The default setting is to short the CHASSIS# and the GND pin by a jumper cap to disable the function.

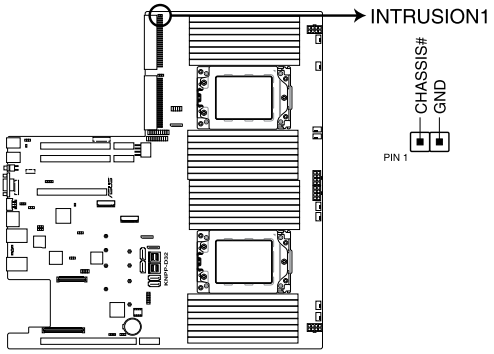

KNPP-D32 Chassis Intrusion connector

15. Mezzanine PCIE card connectors (MEZZPCIE1-2)

The MEZZPCIE1-2 connector supports Open Compute Project (OCP) cards.

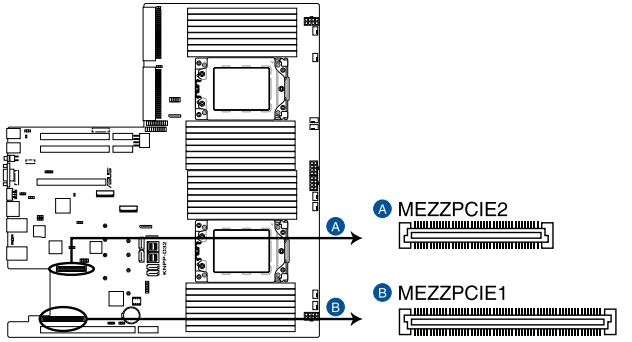

KNPP-D32 MEZZPCIE connectors

16. M.2 (NGFF) card connectors (NGFF1-2)

These connectors allow you to install M.2 devices.

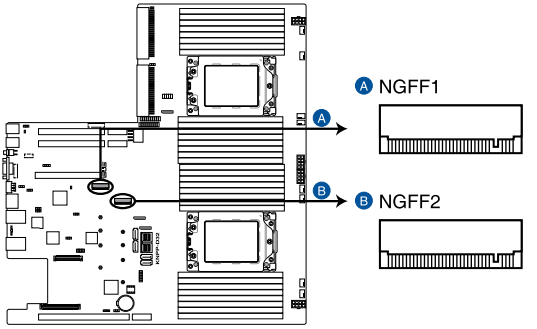

KNPP-D32 NGFF connectors

- This connector supports type 2242 / 2260 / 2280 / 22110 devices on both PCI-E and SATA interface.
- If the SATA M.2 (NGFF1) slot is occupied, the SSATA2 slot will be disabled.

The M.2 (NGFF) device is purchased separately

17. Serial port connector (10-1 pin COM1)

This connector is for a serial (COM) port. Connect the serial port module cable to this connector, then install the module to a slot opening at the back of the system chassis.

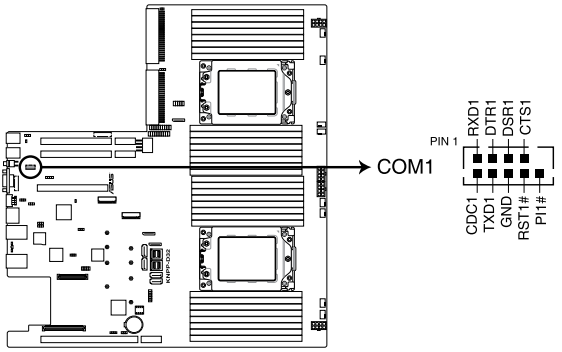

KNPP-D32 Serial port connector

The COM module is purchased separately.

18. Micro SD card slot (MSD1)

Your motherboard supports SD Memory Card v2.00 (SDHC) / v3.00 (SDXC).

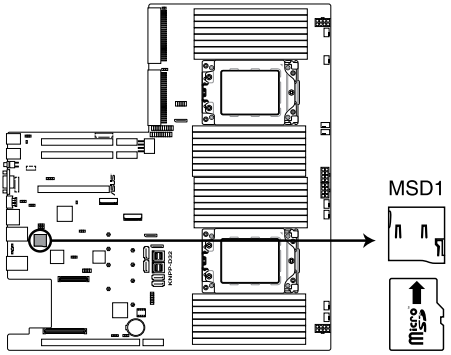

KNPP-D32 MSD1

Disconnect all power (including redundant PSUs) from the existing system before you add or remove a Memory Card, then reboot the system to access the Memory Card.

Some memory cards may not be compatible with your motherboard. Ensure that you use only compatible memory cards to prevent loss of data, damage to your device, or memory card, or both.

19. OCP LAN Activity LED connector (4-1 pin OCP_LED1)

OCP LAN LED connector supports OCP LAN card Active LED.

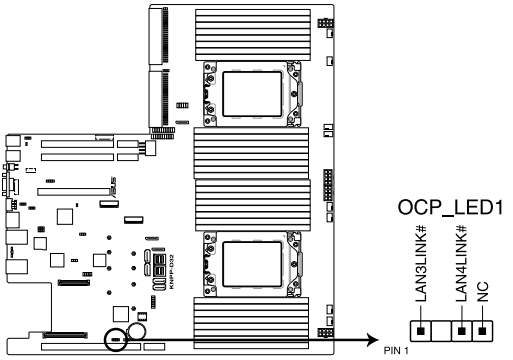

KNPP-D32 OCP_LED1 connector

20. VPP_I2C1 connector (10-1 pin VPP_I2C1)

This connector is used for the Intel VMD function and sensor readings.

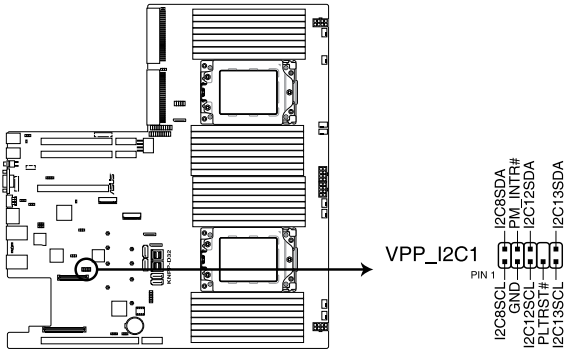

KNPP-D32 VPP_I2C1 connector

21. USB 3.0 connectors (OCUUSB1)

Connect a compatible USB module cable to the OCUUSB1 connector, and then install the module to a slot opening at the back or front of the system chassis. You can enjoy all the benefits of USB 3.0 including faster data transfer speeds of up to 5 Gbps, faster charging time for USB-chargeable devices, optimized power efficiency, and backward compatibility with USB 2.0. (OCUUSB1 connector is used for the front USB panel by default).

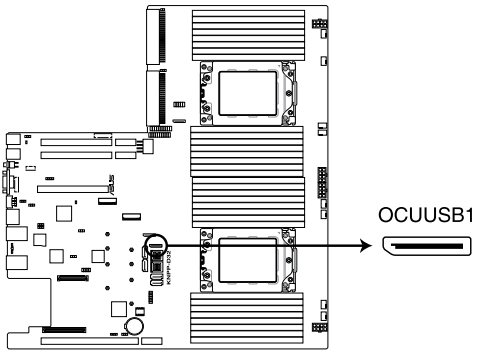

KNPP-D32 OCUUSB1

The USB port module is purchased separately.

BIOS Setup

5

This chapter tells how to change the system settings through the BIOS Setup menus. Detailed descriptions of the BIOS parameters are also provided.

5.1 Managing and updating your BIOS

The following utilities allow you to manage and update the motherboard Basic Input/Output System (BIOS) setup:

1. **ASUS CrashFree BIOS 3**

   To recover the BIOS using a bootable USB flash disk drive when the BIOS file fails or gets corrupted.

2. **ASUS EzFlash**

   Updates the BIOS using a USB flash disk.

3. **BUPDATER**

   Updates the BIOS in DOS mode using a bootable USB flash disk drive.

Refer to the corresponding sections for details on these utilities.



Save a copy of the original motherboard BIOS file to a bootable USB flash disk drive in case you need to restore the BIOS in the future. Copy the original motherboard BIOS using the BUPDATER utility.

5.1.1 ASUS CrashFree BIOS 3 utility

The ASUS CrashFree BIOS 3 is an auto recovery tool that allows you to restore the BIOS file when it fails or gets corrupted during the updating process. You can update a corrupted BIOS file using a USB flash drive that contains the updated BIOS file.



Prepare a USB flash drive containing the updated motherboard BIOS before using this utility.

Recovering the BIOS from a USB flash drive

To recover the BIOS from a USB flash drive:

1. Insert the USB flash drive with the original or updated BIOS file to one USB port on the system.
2. The utility will automatically recover the BIOS. It resets the system when the BIOS recovery finished.



DO NOT shut down or reset the system while recovering the BIOS! Doing so would cause system boot failure!



The recovered BIOS may not be the latest BIOS version for this motherboard. Visit the ASUS website at www.asus.com to download the latest BIOS file.

5.1.2 ASUS EZ Flash Utility

The ASUS EZ Flash Utility feature allows you to update the BIOS without having to use a DOS-based utility.

Before you start using this utility, download the latest BIOS from the ASUS website at www.asus.com.

To update the BIOS using EZ Flash Utility:

1. Insert the USB flash disk that contains the latest BIOS file into the USB port.
2. Enter the BIOS setup program. Go to the **Tool** menu then select **ASUS EZ Flash Utility**. Press <Enter>.

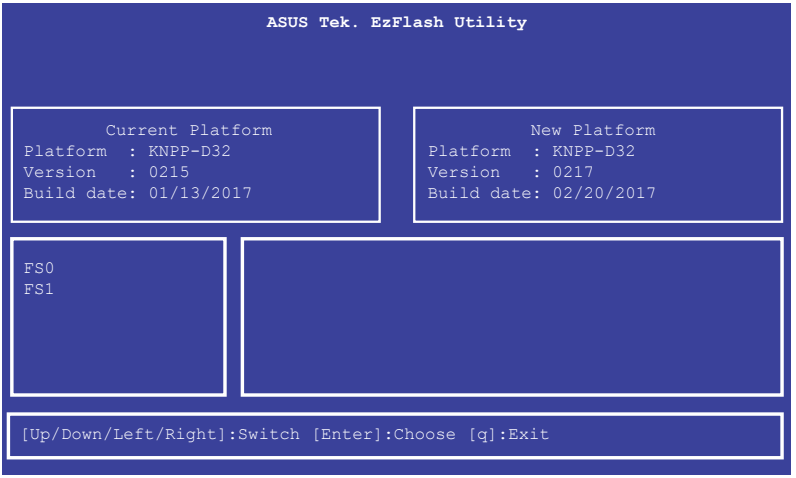

3. Press <Tab> to switch to the **Drive** field.
4. Press the Up/Down arrow keys to find the USB flash disk that contains the latest BIOS, then press <Enter>.
5. Press <Tab> to switch to the **Folder Info** field.
6. Press the Up/Down arrow keys to find the BIOS file, and then press <Enter> to perform the BIOS update process. Reboot the system when the update process is done.

- This function can support devices such as a USB flash disk with FAT 32/16 format and single partition only.
- DO NOT shut down or reset the system while updating the BIOS to prevent system boot failure!

Ensure to load the BIOS default settings to ensure system compatibility and stability. Press <F5> and select **Yes** to load the BIOS default settings.

5.1.3 BUPDATER utility

The succeeding BIOS screens are for reference only. The actual BIOS screen displays may not be the same as shown.

The BUPDATER utility allows you to update the BIOS file in the DOS environment using a bootable USB flash disk drive with the updated BIOS file.

Updating the BIOS file

To update the BIOS file using the BUPDATER utility:

1. Visit the ASUS website at www.asus.com and download the latest BIOS file for the motherboard. Save the BIOS file to a bootable USB flash disk drive.
2. Copy the BUPDATER utility (BUPDATER.exe) from the ASUS support website at www.asus.com/support to the bootable USB flash disk drive you created earlier.
3. Boot the system in DOS mode, then at the prompt, type:

   `BUPDATER /i[filename].CAP`

   where [filename] is the latest or the original BIOS file on the bootable USB flash disk drive, then press <Enter>.

```
A:\>BUPDATER /i[file name].CAP
```

4. The utility verifies the file, then starts updating the BIOS file.

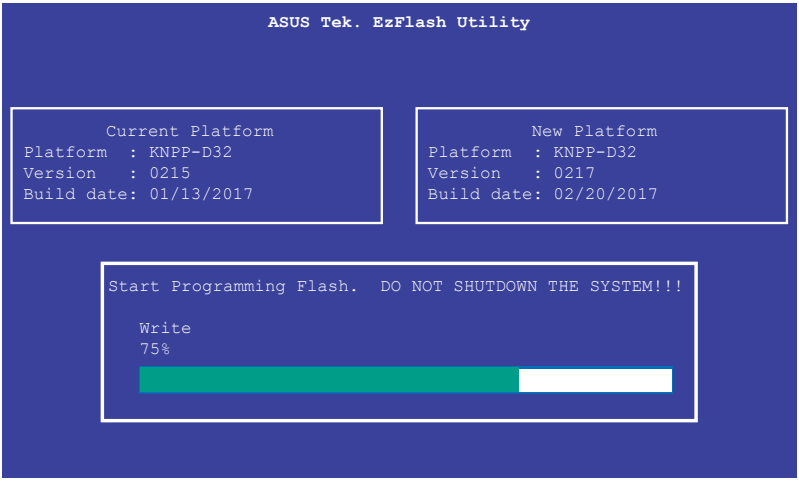

DO NOT shut down or reset the system while updating the BIOS to prevent system boot failure!

5. The utility returns to the DOS prompt after the BIOS update process is completed. Reboot the system from the hard disk drive.

```
The BIOS update is finished! Please restart your system.
C:\>
```

5.2 BIOS setup program

This motherboard supports a programmable firmware chip that you can update using the provided utility described in section **5.1 Managing and updating your BIOS**.

Use the BIOS Setup program when you are installing a motherboard, reconfiguring your system, or prompted to "Run Setup." This section explains how to configure your system using this utility.

Even if you are not prompted to use the Setup program, you can change the configuration of your computer in the future. For example, you can enable the security password feature or change the power management settings. This requires you to reconfigure your system using the BIOS Setup program so that the computer can recognize these changes and record them in the CMOS RAM of the firmware chip.

The firmware chip on the motherboard stores the Setup utility. When you start up the computer, the system provides you with the opportunity to run this program. Press <Del> during the Power-On Self-Test (POST) to enter the Setup utility; otherwise, POST continues with its test routines.

If you wish to enter Setup after POST, restart the system by pressing <Ctrl>+<Alt>+<Delete>, or by pressing the reset button on the system chassis. You can also restart by turning the system off and then back on. Do this last option only if the first two failed.

The Setup program is designed to make it as easy to use as possible. Being a menu-driven program, it lets you scroll through the various sub-menus and make your selections from the available options using the navigation keys.

- The default BIOS settings for this motherboard apply for most conditions to ensure optimum performance. If the system becomes unstable after changing any BIOS settings, load the default settings to ensure system compatibility and stability. Press <F5> and select **Yes** to load the BIOS default settings.
- The BIOS setup screens shown in this section are for reference purposes only, and may not exactly match what you see on your screen.
- Visit the ASUS website (www.asus.com) to download the latest BIOS file for this motherboard.

5.2.1 BIOS menu screen

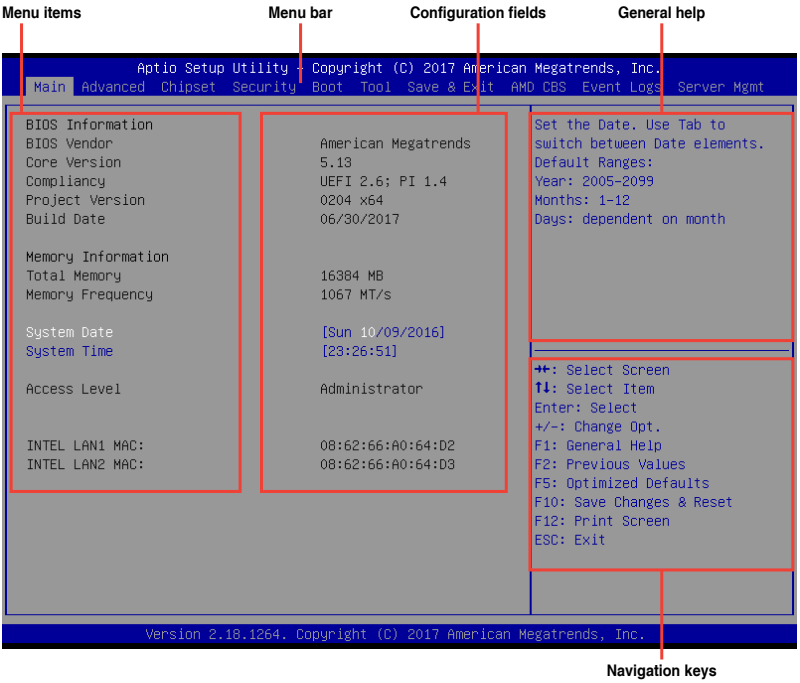

5.2.2 Menu bar

The menu bar on top of the screen has the following main items:

Main	For changing the basic system configuration
Advanced	For changing the advanced system settings
Chipset	For changing the chipset settings
Security	For changing the security settings
Boot	For changing the system boot configuration
Tool	For configuring options for special functions
Save & Exit	For selecting the exit options
AMD CBS	For configuring AMD CBS settings
Event Logs	For changing the event log settings
Server Mgmt	For changing the Server Mgmt settings

To select an item on the menu bar, press the right or left arrow key on the keyboard until the desired item is highlighted.

5.2.3 Menu items

The highlighted item on the menu bar displays the specific items for that menu. For example, selecting **Main** shows the Main menu items.

The other items (such as Advanced) on the menu bar have their respective menu items.

5.2.4 Submenu items

A solid triangle before each item on any menu screen means that the item has a submenu. To display the submenu, select the item then press <Enter>.

5.2.5 Navigation keys

At the bottom right corner of a menu screen are the navigation keys for the BIOS setup program. Use the navigation keys to select items in the menu and change the settings.

5.2.6 General help

At the top right corner of the menu screen is a brief description of the selected item.

5.2.7 Configuration fields

These fields show the values for the menu items. If an item is user-configurable, you can change the value of the field opposite the item. You cannot select an item that is not user-configurable.

A configurable field is enclosed in brackets, and is highlighted when selected. To change the value of a field, select it and press <Enter> to display a list of options.

5.2.8 Pop-up window

Select a menu item and press <Enter> to display a pop-up window with the configuration options for that item.

5.2.9 Scroll bar

A scroll bar appears on the right side of a menu screen when there are items that do not fit on the screen. Press the Up / Down arrow keys or <Page Up> / <Page Down> keys to display the other items on the screen.

5.3 Main menu

When you enter the BIOS Setup program, the Main menu screen appears. The Main menu provides you an overview of the basic system information, and allows you to set the system date, time, language, and security settings.

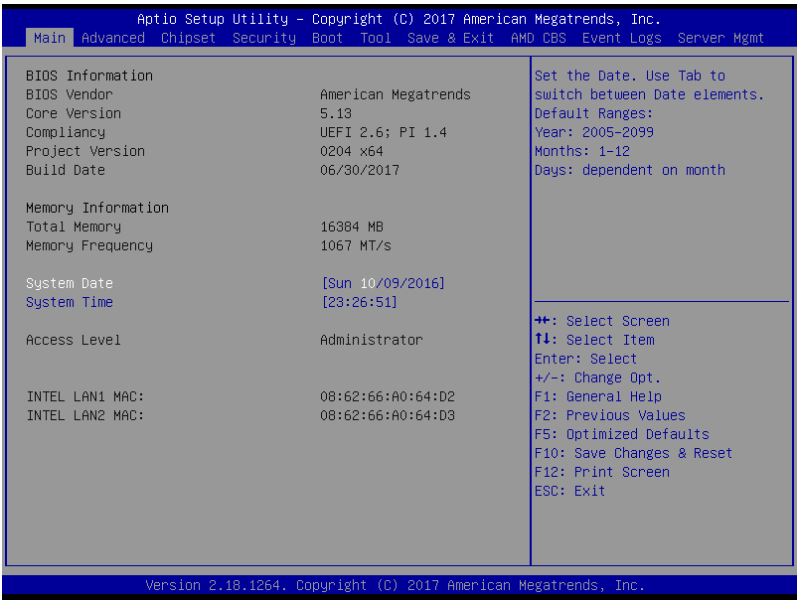

5.3.1 System Date [Day xx/xx/xxxx]

Allows you to set the system date.

5.3.2 System Time [xx:xx:xx]

Allows you to set the system time.

5.4 Advanced menu

The Advanced menu items allow you to change the settings for the CPU and other system devices.

Take caution when changing the settings of the Advanced menu items. Incorrect field values can cause the system to malfunction.

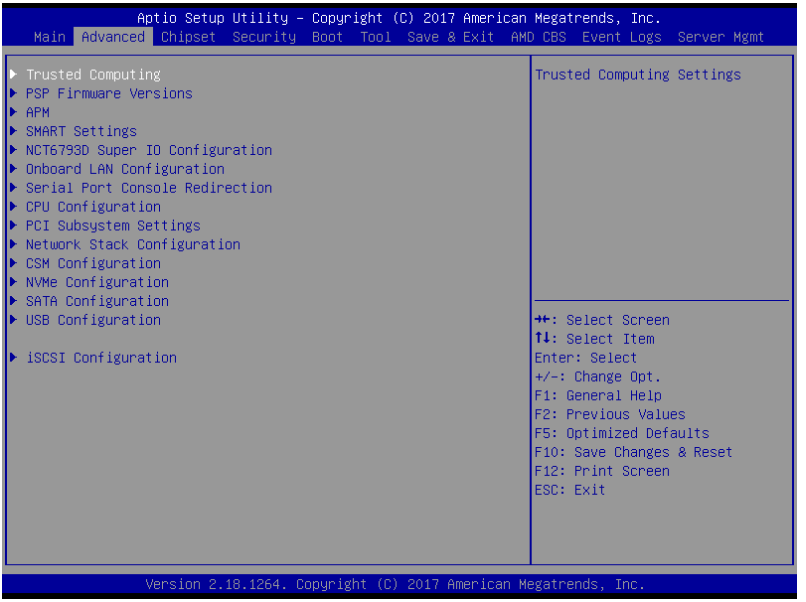

5.4.1 Trusted Computing

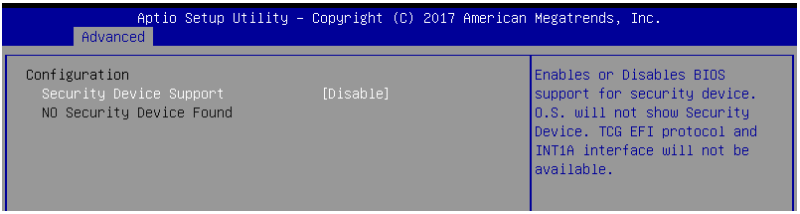

Configuration

Security Device Support [Disabled]

Allows you to enable or disable the BIOS support for security device.
Configuration options: [Disabled] [Enabled]

5.4.2 PSP Firmware Versions

This page displays the PSP firmware versions.

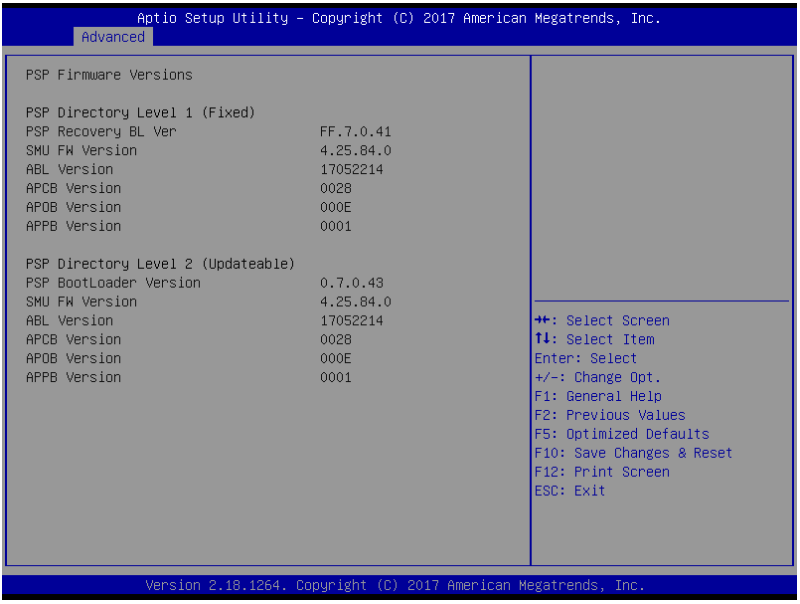

5.4.3 APM

Allows you to configure the Advance Power Management (APM) settings.

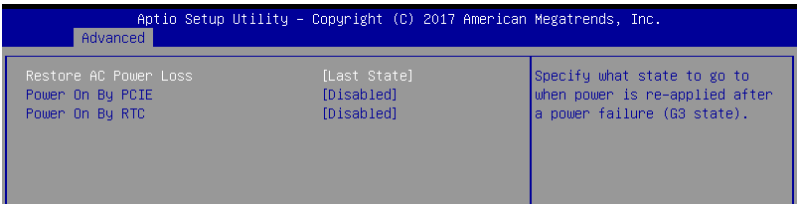

Restore AC Power Loss [Last State]

When set to [Power Off], the system goes into off state after an AC power loss. When set to [Power On], the system will reboot after an AC power loss. When set to [Last State], the system goes into either off or on state, whatever the system state was before the AC power loss.
Configuration options: [Power Off] [Power On] [Last State]

Power On By PCIE [Disabled]

[Disabled] Disables the PCIE devices to generate a wake event.

[Enabled] Enables the PCIE devices to generate a wake event.

Power On By RTC [Disabled]

[Disabled] Disables RTC to generate a wake event.

[Enabled] When set to [Enabled], the items **RTC Alarm Date (Days)** and **Hour/Minute/Second** will become user-configurable with set values.

5.4.4 Smart Settings

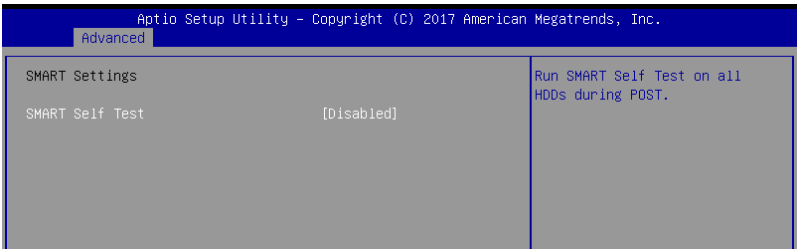

SMART Self Test [Disabled]

Allows you to run SMART Self Test on all HDDs during POST.
Configuration options: [Disabled] [Enabled]

5.4.5 NCT6793D Super IO Configuration

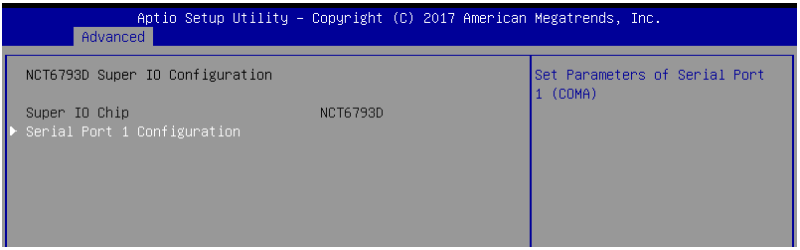

Serial Port 1 Configuration

Allows you to set the parameters of Serial Port 1.

Serial Port [Enabled]

Allows you to enable or disable Serial Port.
Configuration options: [Disabled] [Enabled]

5.4.6 Onboard LAN Configuration

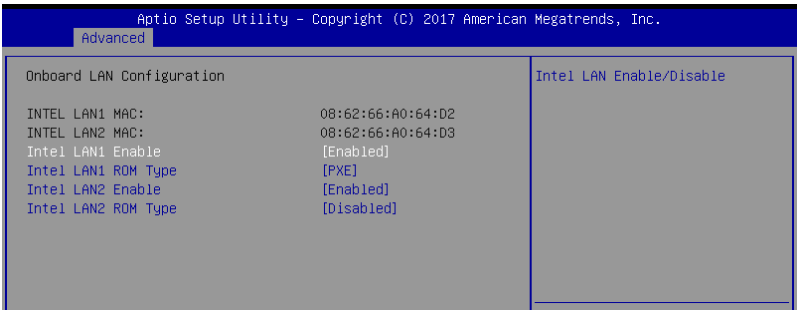

Intel LAN1 Enable [Enabled]

Allows you to enable or disable the Intel LAN.
Configuration options: [Disabled] [Enabled]

The following items appear only when **Intel LAN1 Enable** is set to **[Enabled]**.

Intel LAN 1 ROM Type [PXE]

Allows you to select the Intel LAN ROM type.
Configuration options: [PXE] [iSCSI] [Disabled]

Intel LAN2 Enable [Enabled]

Allows you to enable or disable the Intel LAN.
Configuration options: [Disabled] [Enabled]

The following items appear only when **Intel LAN2 Enable** is set to **[Enabled]**.

Intel LAN 2 ROM Type [Disabled]

Allows you to select the Intel LAN ROM type.
Configuration options: [PXE] [iSCSI] [Disabled]

5.4.7 Serial Port Console Redirection

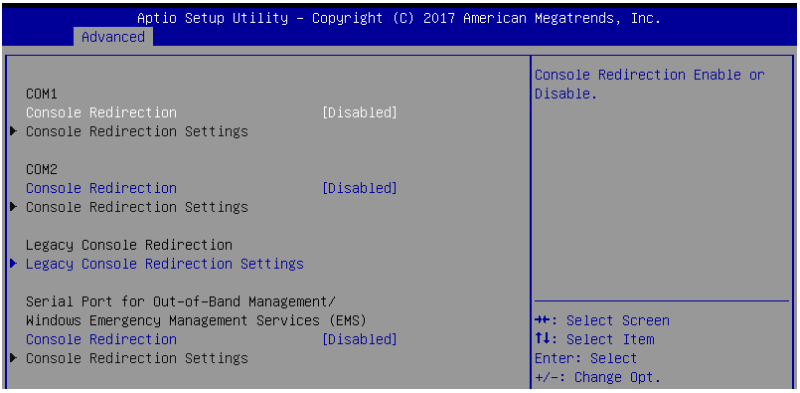

COM1/COM2

Console Redirection [Disabled]

Allows you to enable or disable the console redirection feature.
Configuration options: [Disabled] [Enabled]

The following item appears only when you set **Console Redirection** to **[Enabled]**.

Console Redirection Settings

These items become configurable only when you enable the **Console Redirection** item. The settings specify how the host computer and the remote computer (which the user is using) will exchange data. Both computers should have the same or compatible settings.

Terminal Type [VT-UTF8]

Allows you to set the terminal type.

[VT100]	ASCII char set.
[VT100+]	Extends VT100 to support color, function keys, etc.
[VT-UTF8]	Uses UTF8 encoding to map Unicode chars onto 1 or more bytes.
[ANSI]	Extended ASCII char set.

Bits per second [57600]

Selects serial port transmission speed. The speed must be matched on the other side. Long or noisy lines may require lower speeds.
Configuration options: [9600] [19200] [38400] [57600] [115200]

Data Bits [8]

Configuration options: [7] [8]

Parity [None]

A parity bit can be sent with the data bits to detect some transmission errors. [Mark] and [Space] parity do not allow for error detection.

[None]	None
[Even]	parity bit is 0 if the num of 1's in the data bits is even
[Odd]	parity bit is 0 if num of 1's in the data bits is odd
[Mark]	parity bit is always 1
[Space]	parity bit is always 0

Stop Bits [1]

Stop bits indicate the end of a serial data packet. (A start bit indicates the beginning.) The standard setting is 1 stop bit. Communication with slow devices may require more than 1 stop bit.
Configuration options: [1] [2]

Flow Control [Hardware RTS/CTS]

Flow control can prevent data loss from buffer overflow. When sending data, if the receiving buffers are full, a "stop" signal can be sent to stop the data flow. Once the buffers are empty, a "start" signal can be sent to re-start the flow. Hardware flow control uses two wires to send start/stop signals.
Configuration options: [None] [Hardware RTS/CTS]

VT -UTF8 Combo Key Support [Enabled]

This allows you to enable the VT -UTF8 Combination Key Support for ANSI/VT100 terminals.
Configuration options: [Disabled] [Enabled]

Recorder Mode [Disabled]

With this mode enabled only text will be sent. This is to capture Terminal data.
Configuration options: [Disabled] [Enabled]

Legacy OS Redirection Resolution [80x24]

This allows you to set the number of rows and columns supported on the Legacy OS.
Configuration options: [80x24] [80x25]

Putty Keypad [VT100]

This allows you to select the FunctionKey and Keypad on Putty.
Configuration options: [VT100] [LINUX] [XTERMR6] [SCO] [ESCN] [VT400]

Redirection After BIOS POST [Always Enable]

This setting allows you to specify if Bootloader is selected than Legacy console redirection.
Configuration options: [Always Enable] [Bootloader]

Legacy Console Redirection Settings

Legacy Console Redirection Port [COM1]

Allows you to select a COM port to display redirection of Legacy OS and Legacy OPROM Messages.
Configuration options: [COM1] [COM2]

Serial Port for Out-of-Band Management/ Windows Emergency Management Services (EMS)

Console Redirection [Disabled]

Allows you to enable or disable the console redirection feature.
Configuration options: [Disabled] [Enabled]

The following item appears only when you set **Console Redirection** to **[Enabled]**.

Console Redirection Settings

Out-of-Band Mgmt Port [COM1]

Microsoft Windows Emergency Management Services (EMS) allow for remote management of a Windows Server OS through a serial port.
Configuration options: [COM1] [COM2]

Terminal Type [VT-UTF8]

Microsoft Windows Emergency Management Services (EMS) allow for remote management of a Windows Server OS through a serial port.
Configuration options: [VT100] [VT100+] [VT-UTF8] [ANSI]

Bits per second [115200]

Microsoft Windows Emergency Management Services (EMS) allow for remote management of a Windows Server OS through a serial port.
Configuration options: [9600] [19200] [57600] [115200]

Flow Control [None]

Microsoft Windows Emergency Management Services (EMS) allow for remote management of a Windows Server OS through a serial port.
Configuration options: [None] [Hardware RTS/CTS] [Software Xon/Xoff]

5.4.8 CPU Configuration

This page displays the CPU node information.

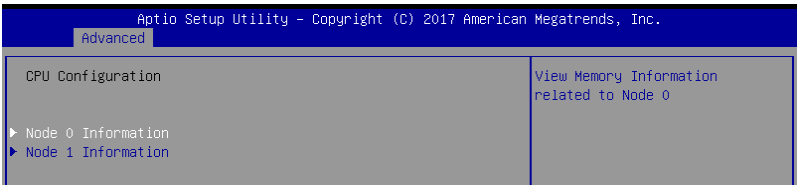

5.4.9 PCI Subsystem Settings

Allows you to configure PCI, PCI-X, and PCI Express Settings.

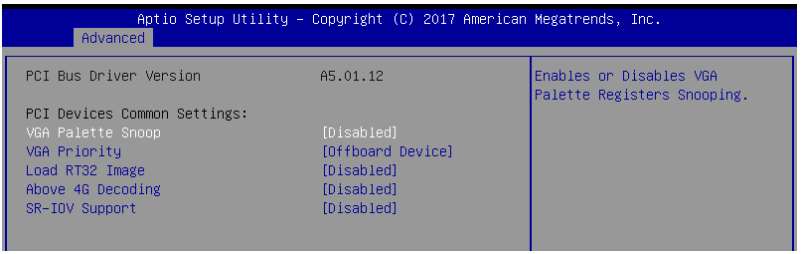

VGA Palette Snoop [Disabled]

This option enables or disables VGA Palette Registers Snooping.
Configuration options: [Disabled] [Enabled]

VGA Priority [Offboard Device]

This option allows you to select the priority of the VGA.
Configuration options: [Offboard Device] [Onboard Device]

Load RT32 Image [Disabled]

This option enables or disables RT32 Image Loading.
Configuration options: [Disabled] [Enabled]

Above 4G Decoding [Disabled]

Allows you to enable or disable 64-bit capable devices to be decoded in above 4G address space. It only works if the system supports 64-bit PCI decoding.
Configuration options: [Disabled] [Enabled]

SR-IOV Support [Disabled]

This option enables or disables SIngle Root IO Virtualization Support if the system has SR-IOV capable PCIe devices.
Configuration options: [Disabled] [Enabled]

5.4.10 Network Stack Configuration

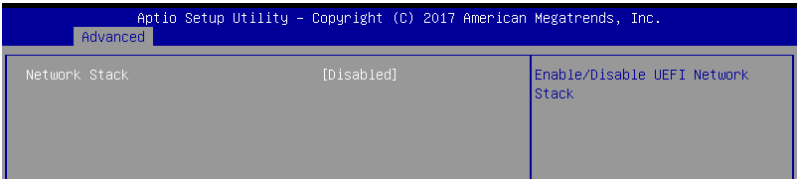

Network stack [Disabled]

Enables or disables the network stack feature.
Configuration options: [Disable] [Enable]

The following item appears only when **Network stack** is set to **[Enabled]**.

Ipv4 PXE Support [Disabled]

Enables or disables the Ipv4 PXE Boot Support. If disabled, Ipv4 PXE boot option will not be created.
Configuration options: [Disabled] [Enabled]

Ipv4 HTTP Support [Disabled]

Enables or disables the Ipv4 HTTP Boot Support. If disabled, Ipv4 HTTP boot option will not be created.
Configuration options: [Disabled] [Enabled]

Ipv6 PXE Support [Disabled]

Enables or disables the Ipv6 PXE Boot Support. If disabled, Ipv6 PXE boot option will not be created.
Configuration options: [Disabled] [Enabled]

Ipv6 HTTP Support [Disabled]

Enables or disables the Ipv6 HTTP Boot Support. If disabled, Ipv6 HTTP boot option will not be created.
Configuration options: [Disabled] [Enabled]

PXE boot wait time [0]

Wait time to press ESC key to abort the PXE boot.

Media detect time [1]

Wait time (in seconds) to detect media.

5.4.11 CSM Configuration

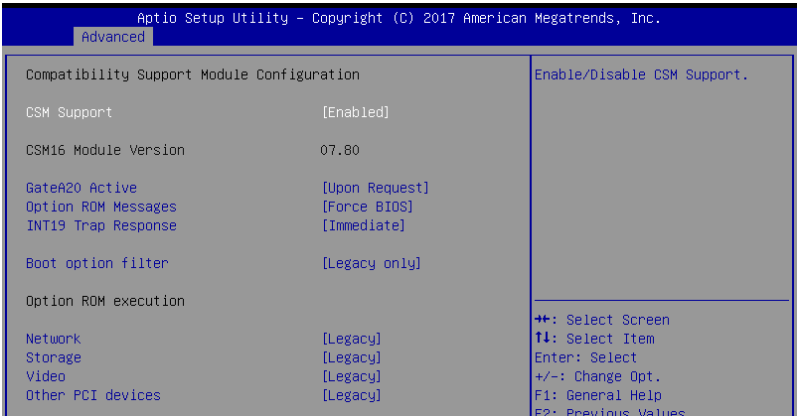

CSM Support [Enabled]

This option allows you to enable or disable CSM Support.
Configuration options: [Disabled] [Enabled]

The following item appears only when **CSM Support** is set to **[Enabled]**.

GateA20 Active [Upon Request]

This allows you to set the GA20 option.
Configuration options: [Upon Request] [Always]

Option ROM Messages [Force BIOS]

This allows you to set the display mode for option ROM.
Configuration options: [Force BIOS] [Keep Current]

INT19 Trap Response [Immediate]

[Immediate] Execute the trap right away.
[Postponed] Execute the trap during legacy boot.

Boot Option filter [Legacy only]

This option allows you to control the Legacy/UEFI ROMs priority.
Configuration options: [UEFI and Legacy] [Legacy only] [UEFI only]

Network / Storage / Video [Legacy]

This option allows you to control the execution of UEFI and Legacy PXE / Storage / Video OpROM.
Configuration options: [UEFI] [Legacy]

Other PCI devices [Legacy]

This item determines the OpROM execution policy for devices other than Network, Storage, or Video.
Configuration options: [UEFI] [Legacy]

5.4.12 NVMe Configuration

This page will display the NVMe controller and drive information.



5.4.13 SATA Configuration

This page will display the SATA controller and drive information.

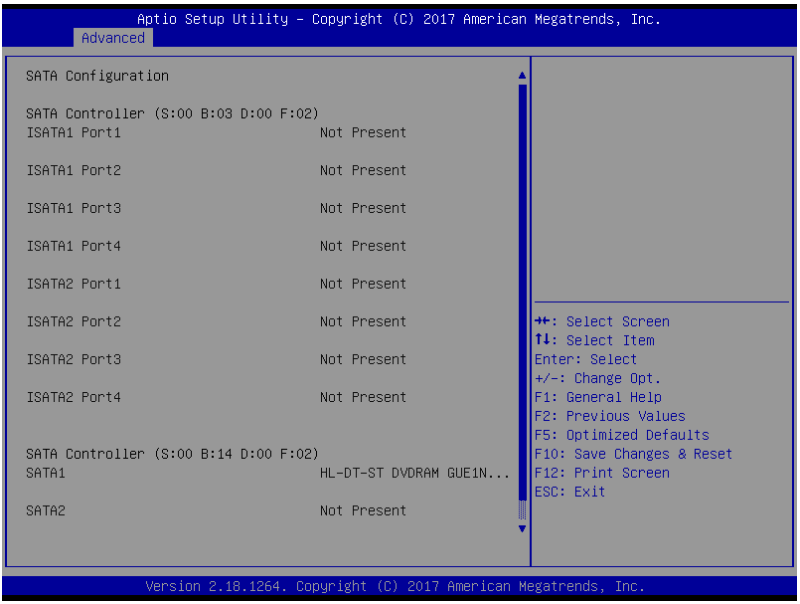

5.4.14 USB Configuration

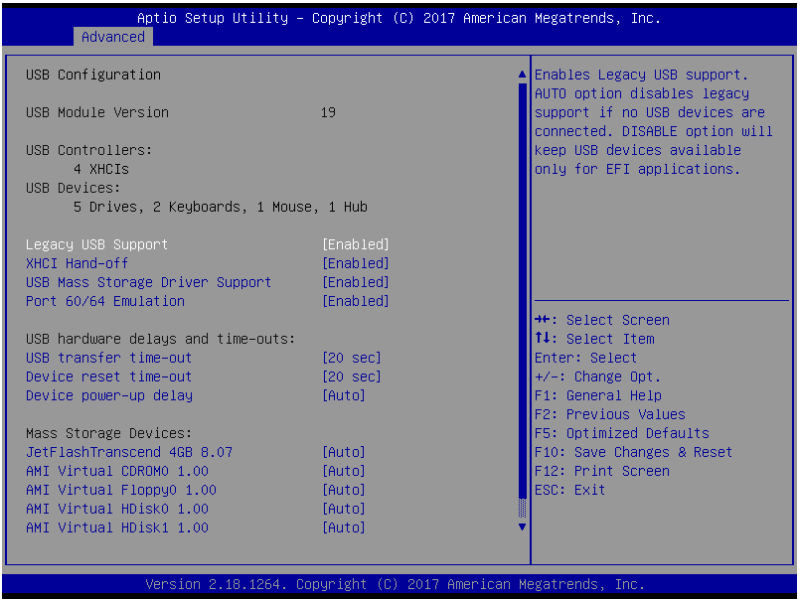

Legacy USB Support [Enabled]

Allows you to enable or disable Legacy USB device support.
Configuration options: [Enabled] [Disabled] [Auto]

XHCI Hand-off [Enabled]

Allows you to enable or disable workaround for OSes without XHCI hand-off support. The XHCI ownership change should be claimed by XHCI driver.
Configuration options: [Enabled] [Disabled]

USB Mass Storage Driver Support [Enabled]

Allows you to enable or disable the USB Mass Storage driver support.
Configuration options: [Disabled] [Enabled]

Port 60/64 Emulation [Enabled]

Allows you to enable or disable I/O port 60h/64h emulation support. This should be enabled for the complete keyboard legacy support for non-USB aware OSes.
Configuration options: [Disabled] [Enabled]

USB hardware delays and time-outs

USB transfer time-out [20 sec]

Allows you to select time-out value for Control, Bulk, and Interrupt transfers.
Configuration options: [1 sec] [5 sec] [10 sec] [20 sec]

Device reset time-out [20 sec]

Allows you to select time-out value for USB mass storage device Start Unit command.
Configuration options: [10 sec] [20 sec] [30 sec] [40 sec]

Device power-up delay [Auto]

Allows you to select maximum time the device will take before it properly reports itself to the Host Controller.
Configuration options: [Auto] [Manual]

Mass Storage Devices

AMI Virtual CDROM0-2 / Floppy / HDisk0 1.00 [Auto]

Allows you to select the mass storage device emulation type.
Configuration options: [Auto] [Floppy] [Forced FDD] [Hard Disk] [CD-ROM]

5.4.15 iSCSI Configuration

Allows you to configure the iSCSi parameters.

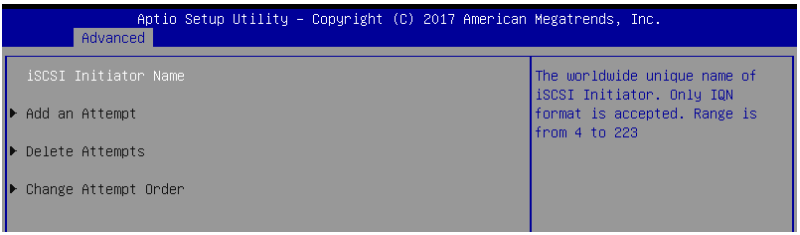

5.5 Chipset menu

The Chipset menu items allow you to change the Chipset settings.

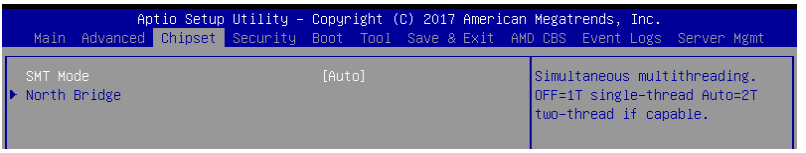

SMT Mode [Auto]

Allows you to select the simultaneous multithreading mode.
Configuration options: [Auto] [Off]

North Bridge

Memory Configuration

Memory Clock [Auto]

This option allows you to select different memory clock values.
Configuration options: [Auto] [1333MHz] [1600MHz] [1866MHz] [2133MHz] [2400MHz]

Socket 0 Information

This item displays the memory information on Socket 0.

Socket 1 Information

This item displays the memory information on Socket 1.

5.6 Security menu

This menu allows a new password to be created or a current password to be changed. The menu also enables or disables the Secure Boot state and lets the user configure the System Mode state.

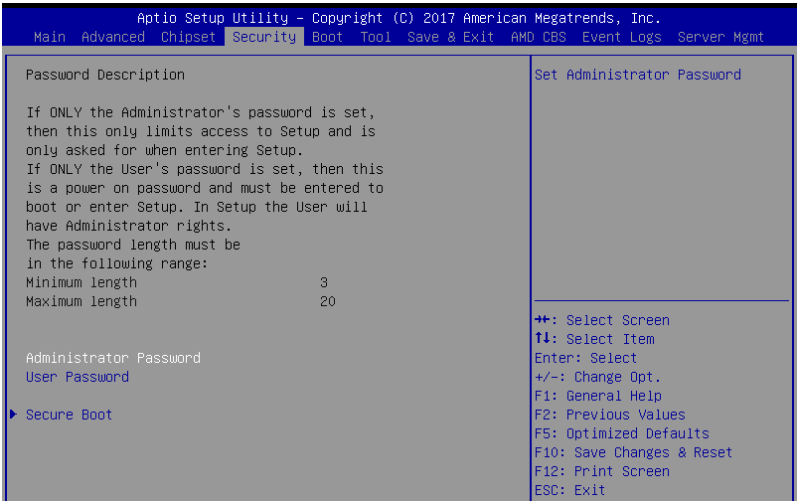

Administrator Password

To set an administrator password:

1. Select the Administrator Password item and press <Enter>.
2. From the Create New Password box, key in a password, then press <Enter>.
3. Confirm the password when prompted.

To change an administrator password:

1. Select the Administrator Password item and press <Enter>.
2. From the Enter Current Password box, key in the current password, then press <Enter>.
3. From the Create New Password box, key in a new password, then press <Enter>.
4. Confirm the password when prompted.

To clear the administrator password, follow the same steps as in changing an administrator password, but press <Enter> when prompted to create/confirm the password.

User Password

To set a user password:

1. Select the User Password item and press <Enter>.
2. From the Create New Password box, key in a password, then press <Enter>.
3. Confirm the password when prompted.

To change a user password:

1. Select the User Password item and press <Enter>.
2. From the Enter Current Password box, key in the current password, then press <Enter>.
3. From the Create New Password box, key in a new password, then press <Enter>.
4. Confirm the password when prompted.

To clear a user password:

1. Select the Clear User Password item and press <Enter>.
2. Select **Yes** from the Warning message window then press <Enter>.

Secure Boot

This item allows you to customize the Secure Boot settings.

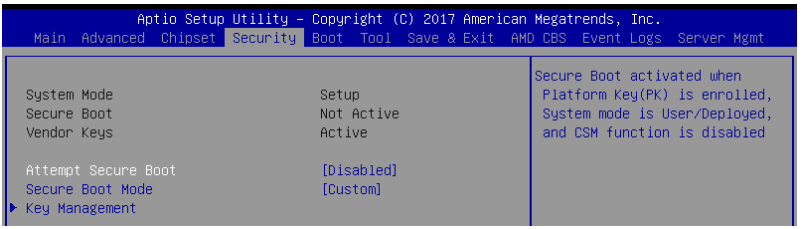

Attempt Secure Boot [Disabled]

Secure Boot can be enabled if the system is running in User mode with enrolled platform Key (EPK) or if the CSM function is disabled.
Configuration options: [Disabled] [Enabled]

Secure Boot Mode [Custom]

Allows you to set the Secure Boot selector.
Configuration options: [Custom] [Standard]

Key Management

This item only appears when the item Secure Boot Mode is set to [Custom]. The Key Management item allows you to modify Secure Boot variables and set Key Management page.

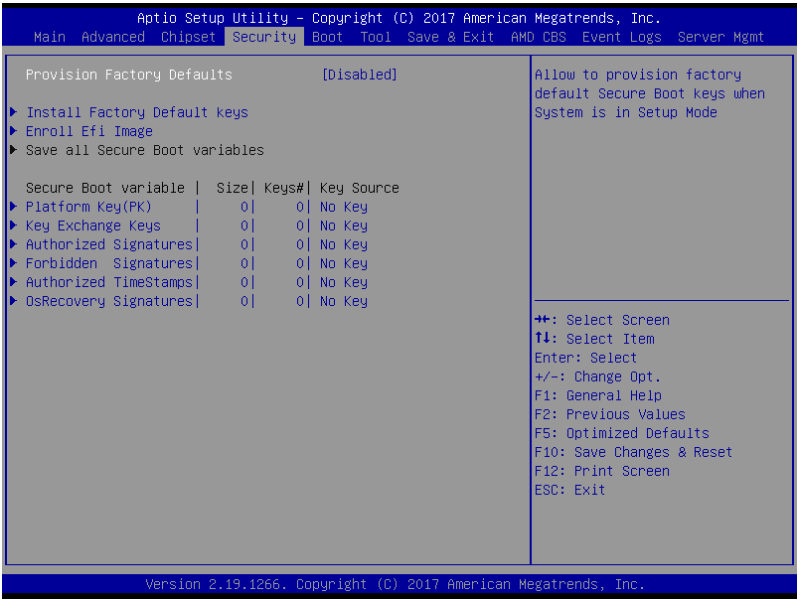

Provision Factory Defaults [Disabled]

Allows you to provision factory default Secure Boot keys when the system is in Setup Mode.
Configuration options: [Disabled] [Enabled]

Install Factory Default keys

This item will install all Factory Default keys.

Enroll Efi Image

This item will allow the image to run in Secure Boot mode.

Save All Secure Boot Variables

This item will ask you if you want to save all secure boot variables. Select Yes if you want to save all secure boot variables, otherwise select No.

Platform Key (PK) / Key Exchange Key (KEK) / Authorized Signatures (DB) / Forbidden Signatures (DBX) / Authorized TimeStamps (DBT) / OsRecovery Signatures

Configuration options: [Erase] [Set New] [Save to File]

5.7 Boot menu

The Boot menu items allow you to change the system boot options.

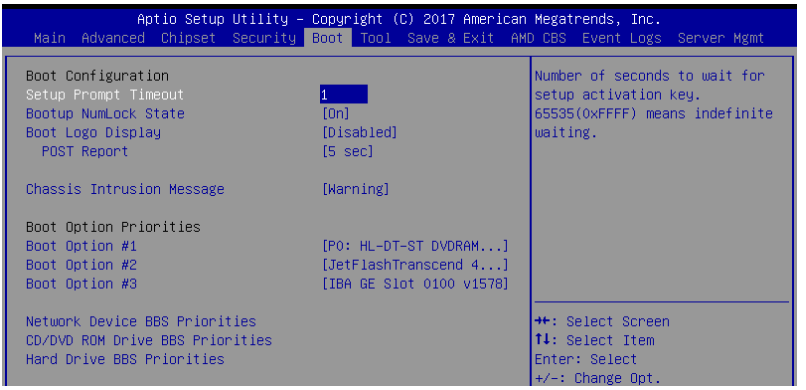

Setup Prompt Timeout [1]

Allows you to set the number of seconds to wait for setup activation key.

Bootup NumLock State [On]

Allows you to select the power-on state for the NumLock.
Configuration options: [Off] [On]

Boot Logo Display [Auto]

Allows you to enable or disable the full screen logo display feature.
Configuration options: [Auto] [Full Screen] [Disabled]

POST Report [5 sec]

Allows you to set the desired POST Report waiting time from 1 to 10 seconds.
Configuration options: [1 sec] ~ [10 sec] [Until Press ESC]

Chassis Intrusion Message [Warning]

Allows you to select the action to perform when chassis intrusion has occurred.
Configuration options: [Warning] [Halt]

Boot Option Priorities

These items specify the boot device priority sequence from the available devices. The number of device items that appears on the screen depends on the number of devices installed in the system.

- To select the boot device during system startup, press <F8> when ASUS Logo appears.
- To access Windows OS in Safe Mode, please press <F8> after POST.

Floppy Drive BBS Priorities / Hard Drive BBS Priorities / CD/DVD ROM Drive BBS Priorities

These items appear only when you connect Floppy / SATA ODD or HDD to the SATA ports and allow you to set the booting order of the SATA devices.

5.8 Tool menu

The Tool menu items allow you to configure options for special functions. Select an item then press <Enter> to display the submenu.

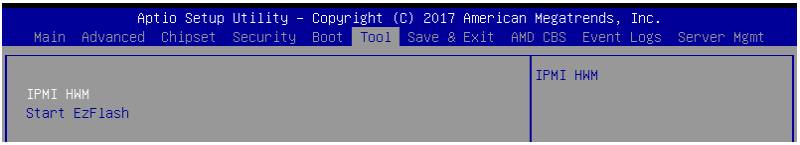

IPMI HWM

Allows you to run the IPMI hardware monitor.

Start EZ Flash

Allows you to run ASUS EZ Flash BIOS ROM Utility when you press <Enter>. Refer to the ASUS EZ Flash Utility section for details.

5.9 Save & Exit menu

The Exit menu items allow you to save or discard your changes to the BIOS items.

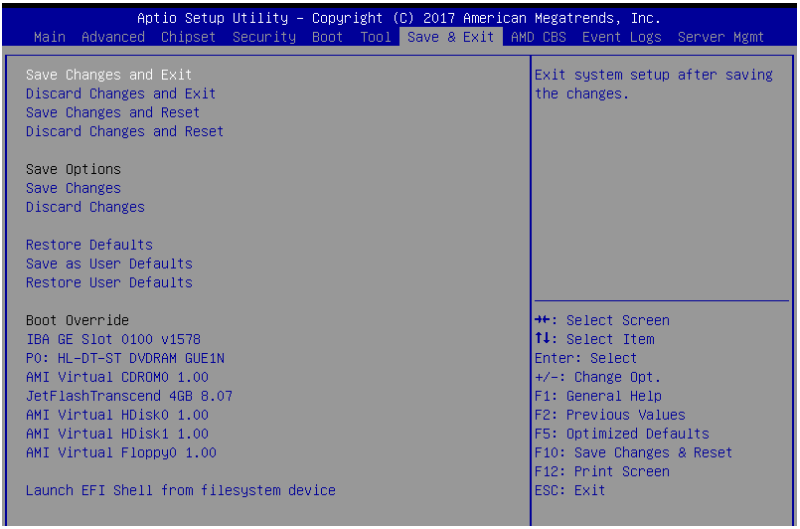



Pressing <Esc> does not immediately exit this menu. Select one of the options from this menu or <F10> from the legend bar to exit.

Save Changes and Exit

Exit system setup after saving the changes.

Discard Changes and Exit

Exit system setup without saving any changes.

Save Changes and Reset

Rest system setup after saving the changes.

Discard Changes and Rest

Rest system setup without saving any changes.

Restore Defaults

Restore/load default values for all the setup options.

Save as User Defaults

Save all the current setup options as user default values.

Restore as User Defaults

Restore/load user default values for all the setup options.

Boot Override

These items displays the available devices. The device items that appears on the screen depends on the number of devices installed in the system. Click an item to start booting from the selected device.

5.10 AMD CBS menu

The Exit menu items allow you to save or discard your changes to the BIOS items.

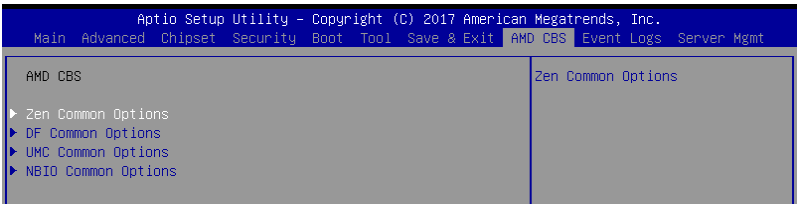

5.10.1 Zen Common Options

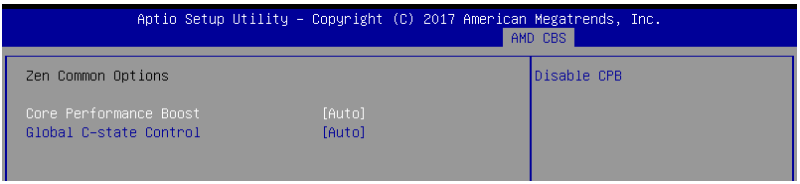

Core Performance Boost [Auto]

This option allows you to enable or disable CPB.
Configuration options: [Disabled] [Auto]

Global C-state Control [Auto]

This option allows you to control IO based C-state generation and DF c-states.
Configuration options: [Disabled] [Enabled] [Auto]

5.10.2 DF Common Options

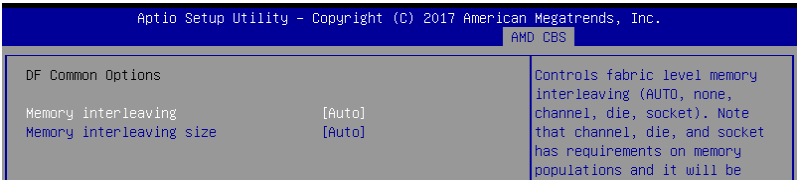

Memory interleaving [Auto]

This option allows you to control fabric level memory interleaving.
Configuration options: [None] [Channel] [Die] [Socket] [Auto]

Memory interleaving size [Auto]

This option allows you to control the memory interleaving size.
Configuration options: [256 Bytes] [512 Bytes] [1 KB] [2 KB] [Auto]

5.10.3 UMC Common Option



DRAM Memory Mapping

Chipselect Interleaving [Auto]

This option allows you to interleave memory blocks across DRAM chip selects for node 0.
Configuration options: [Disabled] [Auto]

BankGroupSwap [Auto]

This option allows you enable or disable BankGroupSwap.
Configuration options: [Disabled] [Enabled] [Auto]

5.10.4 NBIO Common Options

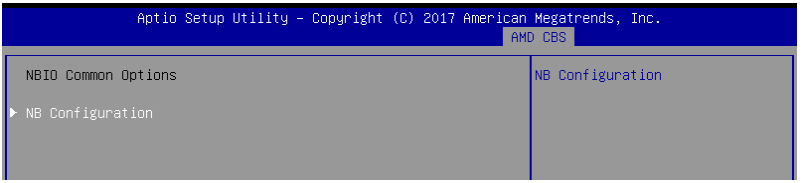

NB Configuration

IOMMU [Auto]

This option allows you enable or disable IOMMU.
Configuration options: [Disabled] [Enabled] [Auto]

5.11 Event Logs menu

The Event Logs menu items allow you to change the event log settings and view the system event logs.

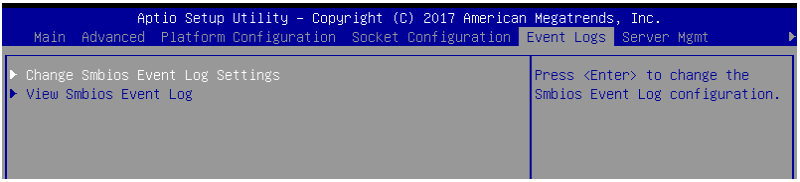

5.11.1 Change Smbios Event Log Settings

Press <Enter> to change the Smbios Event Log configuration.

All values changed here do not take effect until computer is restarted.

Enabling/Disabling Options

Smbios Event Log [Enabled]

Change this to enable or disable all features of Smbios Event Logging during boot.
Configuration options: [Disabled] [Enabled]

Erasing Settings

Erase Event Log [No]

Choose options for erasing Smbios Event Log. Erasing is done prior to any logging activation during reset.
Configuration options: [No] [Yes, Next reset] [Yes, Every reset]

When Log is Full [Do Nothing]

Choose options for reacting to a full Smbios Event Log.
Configuration options: [Do Nothing] [Erase Immediately]

Smbios Event Log Standard Settings

Log System Boot Event [Disabled]

This option allows you to enable or disable logging System boot event.
Configuration options: [Disabled] [Enabled]

5.11.2 View Smbios Event Log

Press <Enter> to view all smbios event logs.

5.12 Server Mgmt menu

The Server Management menu displays the server management status and allows you to change the settings.

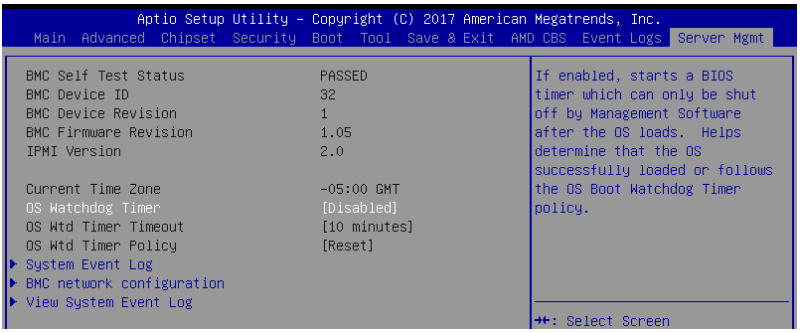

OS Watchdog Timer [Disabled]

This item allows you to start a BIOS timer which can only be shut off by Intel Management Software after the OS loads.
Configuration options: [Disabled] [Enabled]

The following items is configurable only when the **OS Watchdog Timer** is set to **[Enabled]**.

OS Wtd Timer Timeout [10 minutes]

Allows you to configure the length fo the OS Boot Watchdog Timer.
Configuration options: [5 minutes] [10 minutes] [15 minutes] [20 minutes]

OS Wtd Timer Policy [Reset]

This item allows you to configure the how the system should respond if the OS Boot Watch Timer expires.
Configuration options: [Do Nothing] [Reset] [Power Down]

System Event Log

Allows you to change the SEL event log configuration.

Erase SEL [No]

Allows you to choose options for erasing SEL.
Configuration options: [No] [Yes, On next reset] [Yes, On every reset]

When SEL is Full [Do Nothing]

Allows you to choose options for reactions to a full SEL.
Configuration options: [Do Nothing] [Erase Immediately]

BMC network configuration

The sub-items in this configuration allow you to configure the BMC network parameters.

View System Event Log

This item allows you to view the system event log records.

6

Driver Installation

This chapter provides the instructions for installing the necessary drivers for different system components in the Windows® Operating System.

6.1 Management applications and utilities installation

The support DVD that is bundled with your motherboard contains drivers, management applications, and utilities that you can install to maximize the features of your motherboard.



1. The contents of the support DVD are subject to change at any time without notice. Visit the ASUS website (www.asus.com) for the latest updates on software and utilities.
2. The support DVD is supported on Windows® Server 2012 R2 and Windows® Server 2016.

6.2 Running the Support DVD

When you place the support DVD into the optical drive, the DVD automatically displays the main screen if Autorun is enabled in your computer. By default, the Drivers tab is displayed.



If Autorun is NOT enabled in your computer, browse the contents of the support DVD to locate the file **ASSETUP.EXE** from the **BIN** folder. Double-click the **ASSETUP.EXE** to run the support DVD.

The main screen of the Support DVD contains the following tabs:

1. Drivers
2. Utilities
3. Manual
4. Contact



The main screen of the Support DVD looks exactly the same on the Windows® Server 2012 R2 and on the Windows® Server 2016 Operating System (OS).

6.2.1 Drivers menu tab

The Drivers Menu shows the available device drivers if the system detects installed devices. Install the necessary drivers to activate the devices.



6.2.2 Utilities menu tab

The Utilities menu displays the software applications and utilities that the motherboard supports.



6.2.3 Manual menu

The Manual menu provides the link to the Broadcom NetXtreme II Network Adapter user guide.

You need an internet browser installed in your OS to view the User Guide.



6.2.4 Contact information menu

The Contact menu displays the ASUS contact information, e-mail addresses, and useful links if you need more information or technical support for your motherboard.

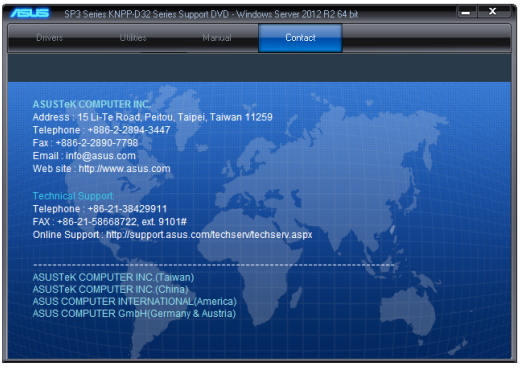

6.3 AMD chipset device software installation

This section provides the instructions on how to install the AMD chipset device software on the system.

You need to manually install the AMD chipset device software on a Windows operating system.

To install the AMD chipset device software:

1. Restart the computer, and then log on with **Administrator** privileges.
2. Insert the motherboard/system support DVD into the optical drive. The support DVD automatically displays the **Drivers** menu if Autorun is enabled in your computer.

If Autorun is NOT enabled in your computer, browse the contents of the support DVD to locate the file **ASSETUP.EXE** from the **BIN** folder. Double-click the **ASSETUP.EXE** to run the support DVD.

3. Click the item **AMD Software** from the menu.



4. The **AMD Software** window appears. Click **Accept and Install** to start the installation, and follow the onscreen instructions to complete the setup process.

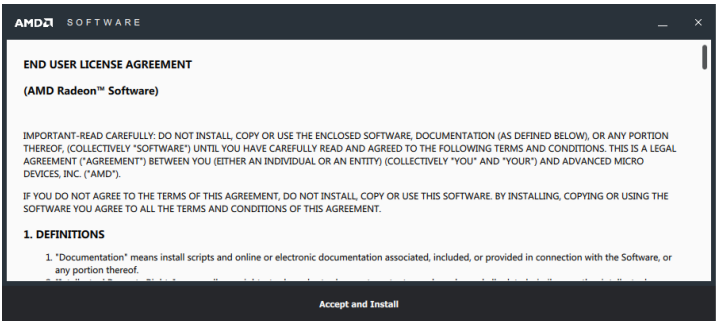

6.4 Installing the Intel® I350-AM2 Gigabit Adapters driver

This section provides the instructions on how to install the **Intel® I350-AM2 Gigabits Adapter Driver** on the system.

To install the **Intel® I350-AM2 Gigabit Adapters Driver** on the Windows® operating system:

1. Restart the computer.
2. Log on with **Administrator** privileges.
3. Insert the motherboard/system support DVD to the optical drive.

If Autorun is NOT enabled in your computer, browse the contents of the support DVD to locate the file **ASSETUP.EXE** from the **BIN** folder. Double-click the **ASSETUP.EXE** to run the support DVD.

4. Click **Intel® I350-AM2 Gigabit Adapters Drivers** in the **Drivers** menu of the main screen to start the installation.



5. Click **Install Drivers and Software** option to begin installation.

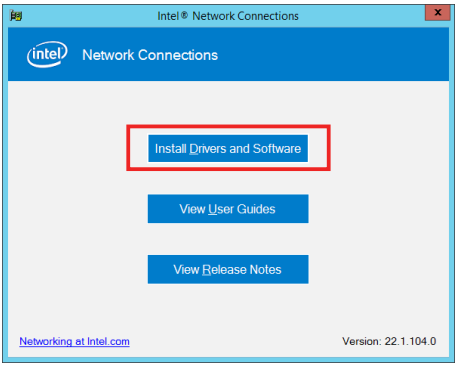

6. Click **Install** to start the installation.

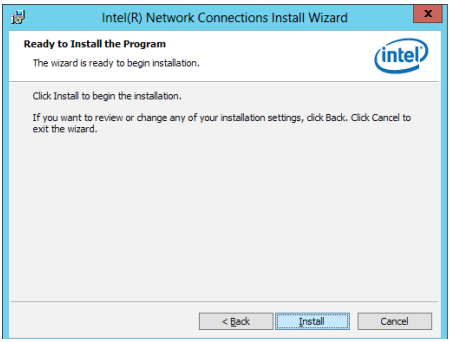

7. When the installation is done, press **Finish** to complete the installation.

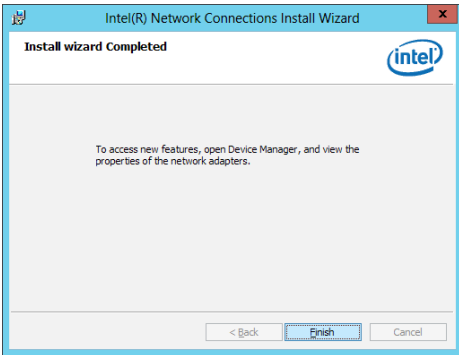

6.5 VGA driver installation

This section provides the instructions on how to install the ASPEED Video Graphics Adapter (VGA) driver.

You need to manually install the ASPEED VGA driver on a Windows® operating system.

To install the ASPEED VGA driver:

1. Restart the computer, and then log on with **Administrator** privileges.
2. Insert the motherboard/system support DVD into the optical drive. The support DVD automatically displays the **Drivers** menu if Autorun is enabled in your computer.

If Autorun is NOT enabled in your computer, browse the contents of the support DVD to locate the file **ASSETUP.EXE** from the **BIN** folder. Double-click the **ASSETUP.EXE** to run the support DVD.

3. Click the **ASPEED AST2500 Display Driver** to begin installation.

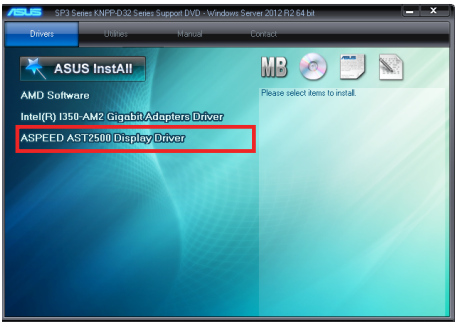

4. From the installation window, click **Next** to start the installation.



5. Click **Install** to start the installation process.

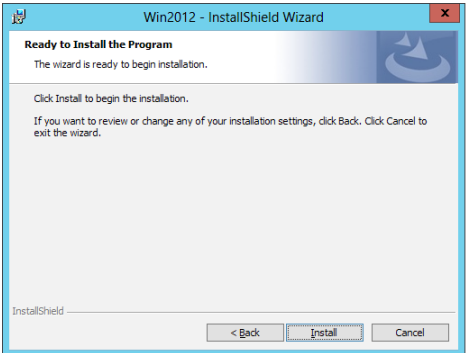

6. Click **Finish** to complete the installation.

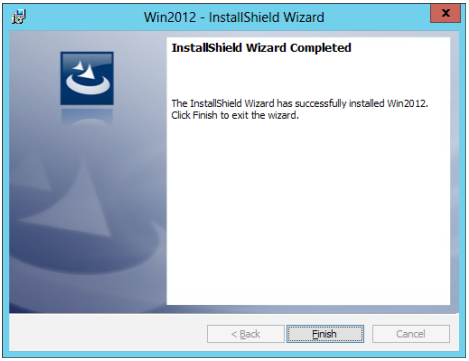

Appendix

This appendix includes additional information that you may refer to when configuring the motherboard.

KNPP-D32 block diagram

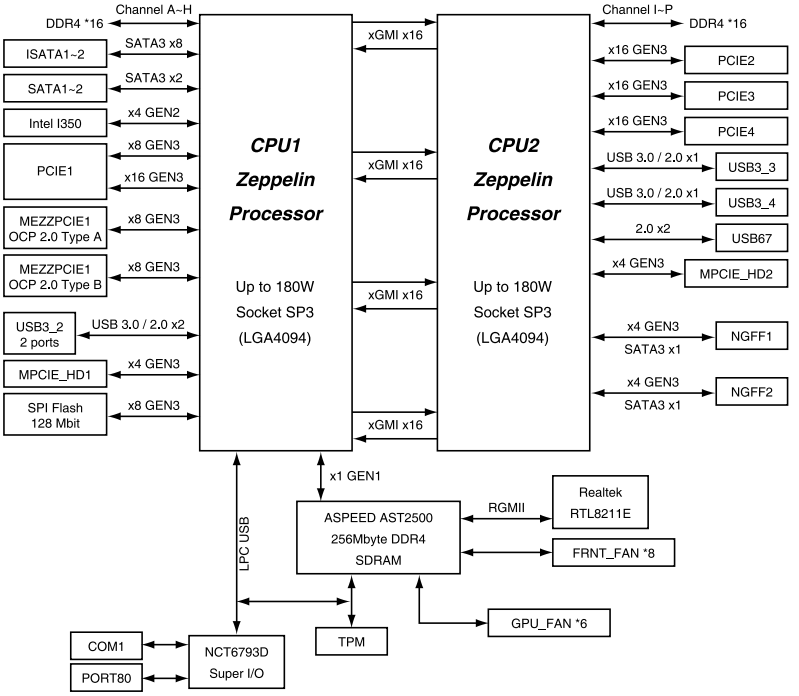

Notices

Federal Communications Commission Statement

This device complies with Part 15 of the FCC Rules. Operation is subject to the following two conditions:

- This device may not cause harmful interference.
- This device must accept any interference received including interference that may cause undesired operation.

This equipment has been tested and found to comply with the limits for a Class A digital device, pursuant to part 15 of the FCC Rules. These limits are designed to provide reasonable protection against harmful interference when the equipment is operated in a commercial environment. This equipment generates, uses, and can radiate radio frequency energy and, if not installed and used in accordance with the instruction manual, may cause harmful interference to radio communications. Operation of this equipment in a residential area is likely to cause harmful interference in which case the user will be required to correct the interference at his own expense.



The use of shielded cables for connection of the monitor to the graphics card is required to assure compliance with FCC regulations. Changes or modifications to this unit not expressly approved by the party responsible for compliance could void the user's authority to operate this equipment.

Compliance Statement of Innovation, Science and Economic Development Canada (ISED)

This device complies with Innovation, Science and Economic Development Canada licence exempt RSS standard(s). Operation is subject to the following two conditions: (1) this device may not cause interference, and (2) this device must accept any interference, including interference that may cause undesired operation of the device.

CAN ICES-3(A)/NMB-3(A)

Déclaration de conformité de Innovation, Sciences et Développement économique Canada (ISED)

Le présent appareil est conforme aux CNR d'Innovation, Sciences et Développement économique Canada applicables aux appareils radio exempts de licence. L'exploitation est autorisée aux deux conditions suivantes : (1) l'appareil ne doit pas produire de brouillage, et (2) l'utilisateur de l'appareil doit accepter tout brouillage radioélectrique subi, même si le brouillage est susceptible d'en compromettre le fonctionnement.

CAN ICES-3(A)/NMB-3(A)

Australia statement notice

From 1 January 2012 updated warranties apply to all ASUS products, consistent with the Australian Consumer Law. For the latest product warranty details please visit https://www.asus.com/support/. Our goods come with guarantees that cannot be excluded under the Australian Consumer Law. You are entitled to a replacement or refund for a major failure and compensation for any other reasonably foreseeable loss or damage. You are also entitled to have the goods repaired or replaced if the goods fail to be of acceptable quality and the failure does not amount to a major failure.

If you require assistance please call ASUS Customer Service 1300 2787 88 or visit us at https://www.asus.com/support/.



DO NOT throw the motherboard in municipal waste. This product has been designed to enable proper reuse of parts and recycling. This symbol of the crossed out wheeled bin indicates that the product (electrical and electronic equipment) should not be placed in municipal waste. Check local regulations for disposal of electronic products.



DO NOT throw the mercury-containing button cell battery in municipal waste. This symbol of the crossed out wheeled bin indicates that the battery should not be placed in municipal waste.

Japan statement notice

This product cannot be directly connected to the Internet (including public wireless LAN) of a telecom carrier (mobile network companies, landline network companies, Internet providers, etc.). When connecting this product to the Internet, be sure to connect it through a router or switch.

Declaration of compliance for product environmental regulation

ASUS follows the green design concept to design and manufacture our products, and makes sure that each stage of the product life cycle of ASUS product is in line with global environmental regulations. In addition, ASUS disclose the relevant information based on regulation requirements.

Please refer to http://csr.asus.com/Compliance.htm for information disclosure based on regulation requirements ASUS is complied with:

EU REACH and Article 33

Complying with the REACH (Registration, Evaluation, Authorization, and Restriction of Chemicals) regulatory framework, we publish the chemical substances in our products at ASUS REACH website at http://csr.asus.com/english/REACH.htm.

EU RoHS

This product complies with the EU RoHS Directive. For more details, see http://csr.asus.com/english/article.aspx?id=35

Japan JIS-C-0950 Material Declarations

Information on Japan RoHS (JIS-C-0950) chemical disclosures is available on http://csr.asus.com/english/article.aspx?id=19

India RoHS

This product complies with the “India E-Waste (Management) Rules, 2016” and prohibits use of lead, mercury, hexavalent chromium, polybrominated biphenyls (PBBs) and polybrominated diphenyl ethers (PBDEs) in concentrations exceeding 0.1% by weight in homogenous materials and 0.01% by weight in homogenous materials for cadmium, except for the exemptions listed in Schedule II of the Rule.

Vietnam RoHS

ASUS products sold in Vietnam, on or after September 23, 2011,meet the requirements of the Vietnam Circular 30/2011/TT-BCT.

Các sản phẩm ASUS bán tại Việt Nam, vào ngày 23 tháng 9 năm2011 trở về sau, đều phải đáp ứng các yêu cầu của Thông tư 30/2011/TT-BCT của Việt Nam.

Turkey RoHS

AEEE Yönetmeliğine Uygundur

ASUS Recycling/Takeback Services

ASUS recycling and takeback programs come from our commitment to the highest standards for protecting our environment. We believe in providing solutions for you to be able to responsibly recycle our products, batteries, other components as well as the packaging materials. Please go to http://csr.asus.com/english/Takeback.htm for detailed recycling information in different regions.

Ecodesign Directive

European Union announced a framework for the setting of ecodesign requirements for energy-related products (2009/125/EC). Specific Implementing Measures are aimed at improving environmental performance of specific products or across multiple product types. ASUS provides product information on the CSR website. The further information could be found at https://csr.asus.com/english/article.aspx?id=1555.

ASUS contact information

ASUSTeK COMPUTER INC.

Address	1F., No. 15, Lide Rd., Beitou Dist., Taipei City 112, Taiwan
Telephone	+886-2-2894-3447
Fax	+886-2-2890-7798
Web site	https://www.asus.com

Technical Support

Telephone	+86-21-38429911
Online Support	https://www.asus.com/support/Product/ContactUs/Services/questionform/?lang=en

ASUSTeK COMPUTER INC. (Taiwan)

Address	1F., No. 15, Lide Rd., Beitou Dist., Taipei City 112, Taiwan
Telephone	+886-2-2894-3447
Fax	+886-2-2890-7798
Web site	https://www.asus.com/tw/

Technical Support

Telephone	+886-2-2894-3447 (0800-093-456)
Online Support	https://www.asus.com/support/Product/ContactUs/Services/questionform/?lang=zh-tw

ASUSTeK COMPUTER INC. (China)

Address	No. 5077, Jindu Road, Minhang District, Shanghai, China
Telephone	+86-21-5442-1616
Fax	+86-21-5442-0099
Web site	https://www.asus.com.cn

Technical Support

Telephone	+86-20-2804-7506 (400-620-6655)
Online Support	https://www.asus.com/support/Product/ContactUs/Services/questionform/?lang=zh-cn

ASUS contact information

ASUS COMPUTER INTERNATIONAL (America)

Address	48720 Kato Rd., Fremont, CA 94538, USA
Fax	+1-510-608-4555
Web site	https://www.asus.com/us/

Technical Support

Support fax	+1-812-284-0883
General support	+1-812-282-2787
Online support	https://www.asus.com/support/Product/ContactUs/Services/questionform/?lang=en-us

ASUS COMPUTER GmbH (Germany and Austria)

Address	Harkort Str. 21-23, 40880 Ratingen, Germany
Fax	+49-2102-959911
Web site	https://www.asus.com/de/

Technical Support

Telephone	+49-1805-010923
Support Fax	+49-2102-959911
Online support	https://www.asus.com/support/Product/ContactUs/Services/questionform/?lang=de-de

ASUS Czech Service s.r.o. (Europe)

Address	Na Rovince 887, 720 00 Ostrava – Hrabová, Czech Republic
Telephone	+420-596766888
Web site	https://www.asus.com/cz/

Technical Support

Telephone	+420-596-766-891
Fax	+420-596-766-329
E-mail	advance.rma.eu@asus.com
Online Support	https://www.asus.com/support/Product/ContactUs/Services/questionform/?lang=cs-cz

ASUS contact information

ASUS Holland BV (The Netherlands)

Address	Marconistraat 2, 7825GD EMMEN, The Netherlands
Web site	https://www.asus.com/nl/

Technical Support

Telephone	+31-(0)591-5-70292
Fax	+31-(0)591-666853
E-mail	advance.rma.eu@asus.com
Online Support	https://www.asus.com/support/Product/ContactUs/Services/questionform/?lang=nl-nl

ASUS Polska Sp. z o.o. (Poland)

Address	Ul. Postępu 6, 02-676 Warszawa, Poland
Web site	https://www.asus.com/pl/

Technical Support

Telephone	+48-225718033
Online Support	https://www.asus.com/support/Product/ContactUs/Services/questionform/?lang=pl-pl

ASK-Service (Russia and CIS)

Address	г.Москва, ул. Орджоникидзе, д.10, Россия
Telephone	(495) 640-32-75
Web site	https://www.asus.com/ru/

Technical Support

Telephone	008-800-100-ASUS (008-800-100-2787)
Online Support	https://www.asus.com/support/Product/ContactUs/Services/questionform/?lang=ru-ru