SMART Board 6000S series interactive display

Models: SBID-62xxS • SBID-62xxS-P • SBID-62xxS-PW SBID-60xxS • SBID-60xxS-P • SBID-60xxS-PW Pg. 5

SBID-62xxS • SBID-62xxS-P • SBID-62xxS-PW

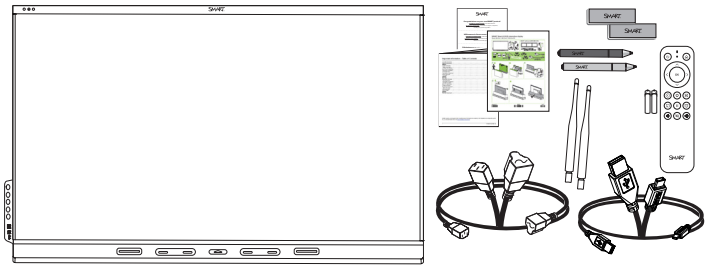

SMART wall mount (WM-SBID-200)

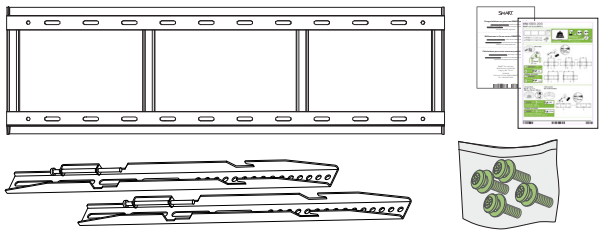

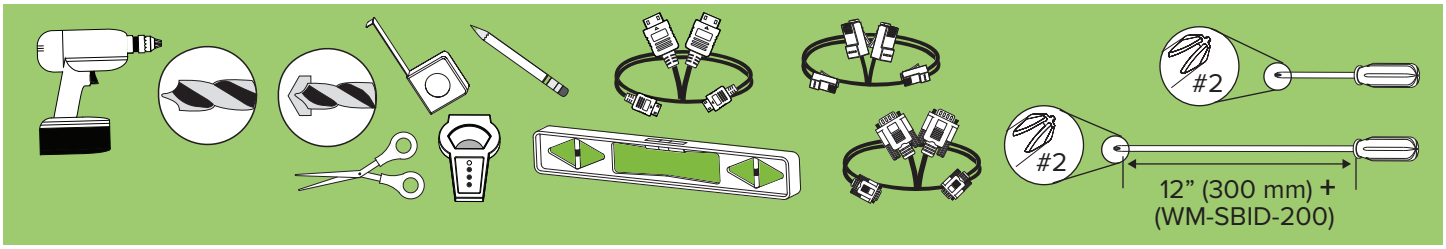

1 A

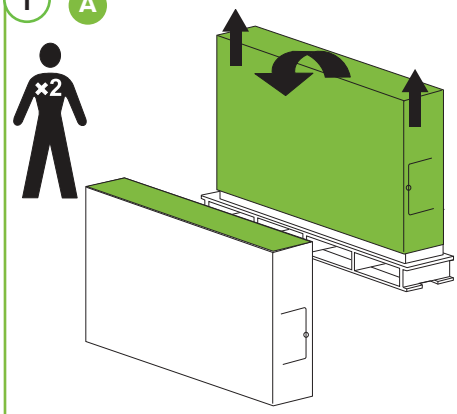

B

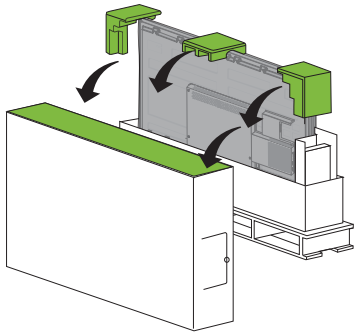

2

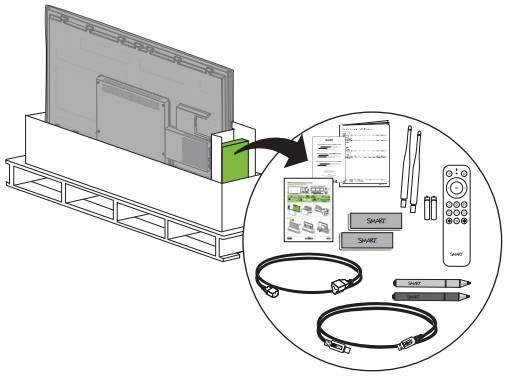

3 A

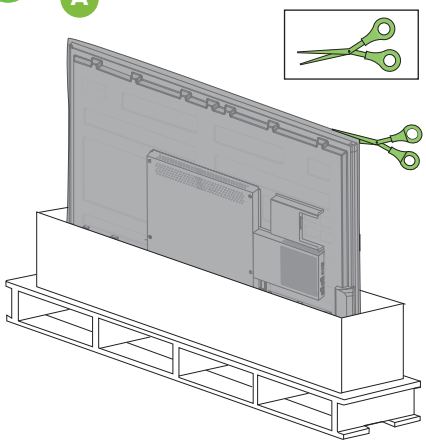

B

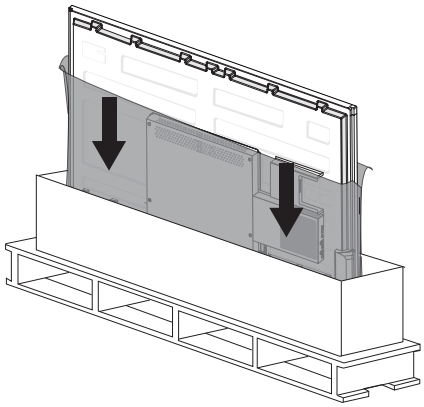

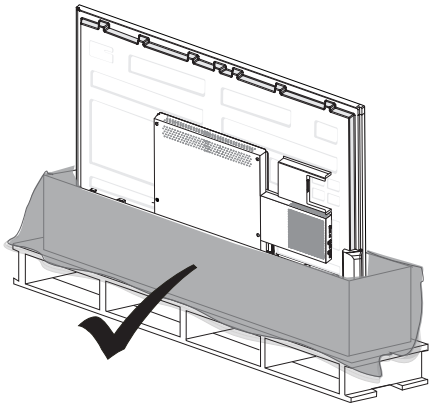

Printed in: US 1033907 Rev 02

SBID-62xxS-P
SBID-62xxS-PW

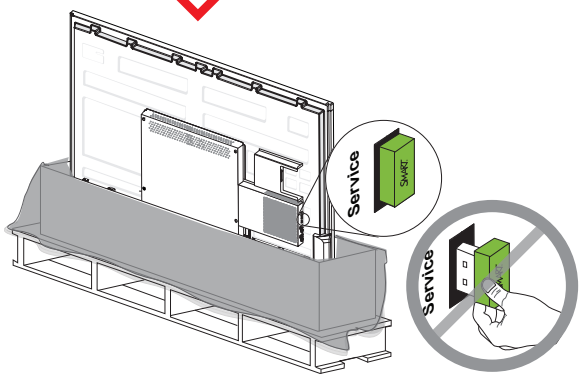

4

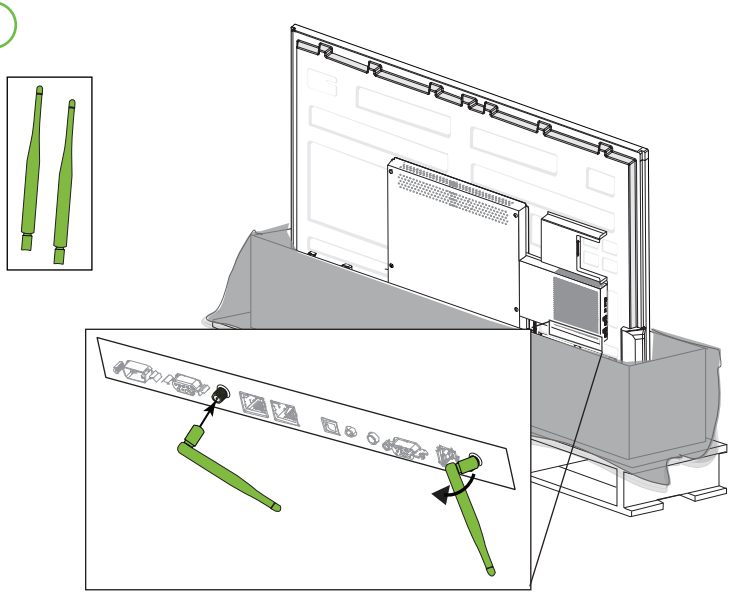

5

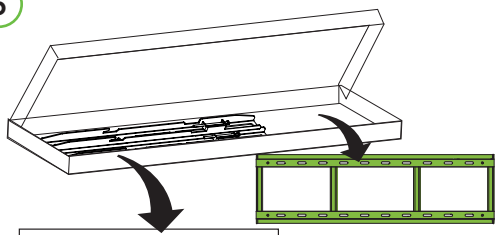

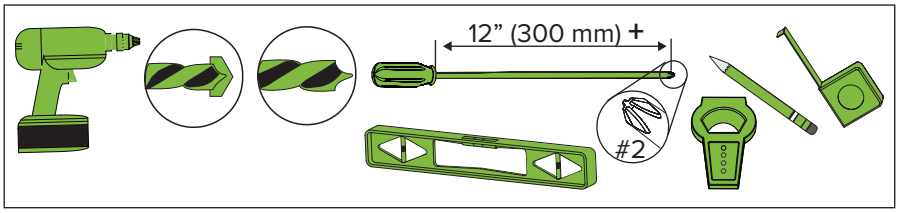

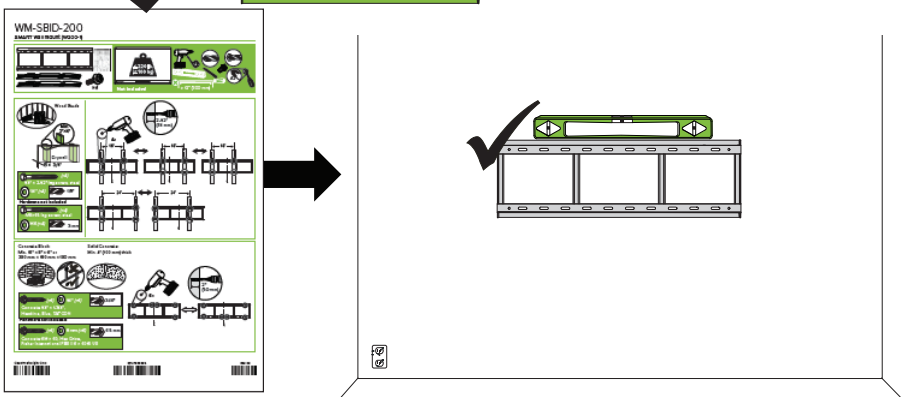

6

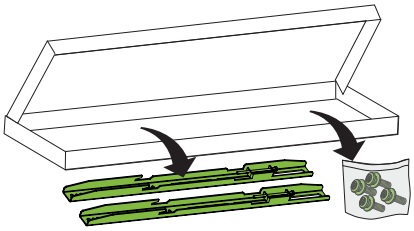

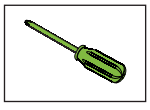

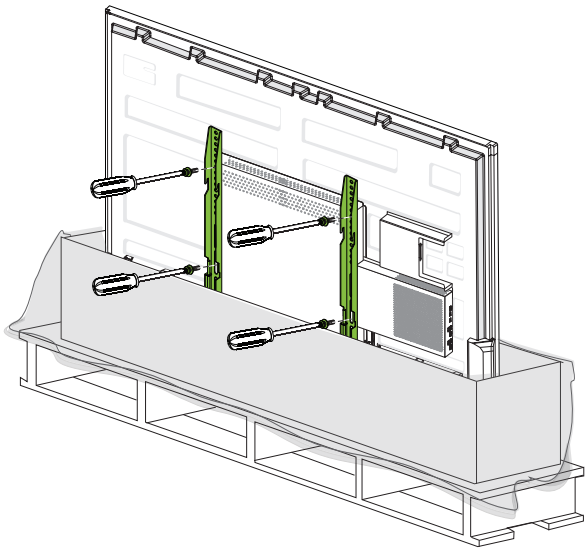

7

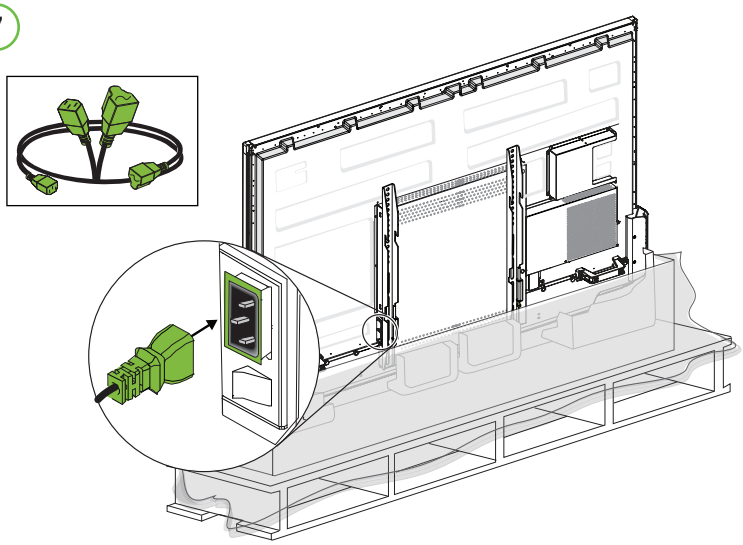

8

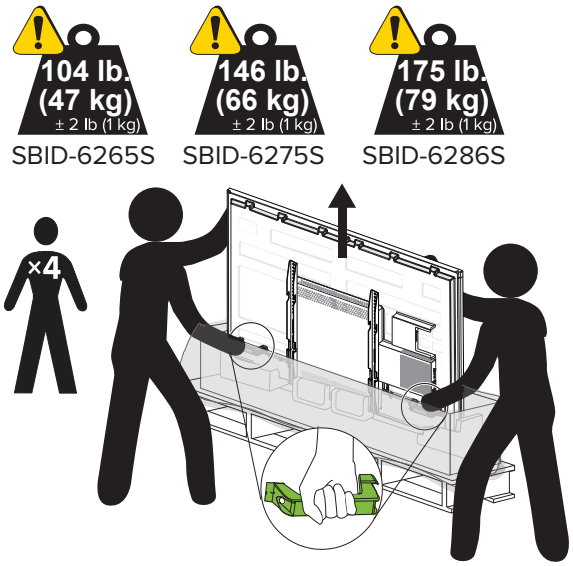

9

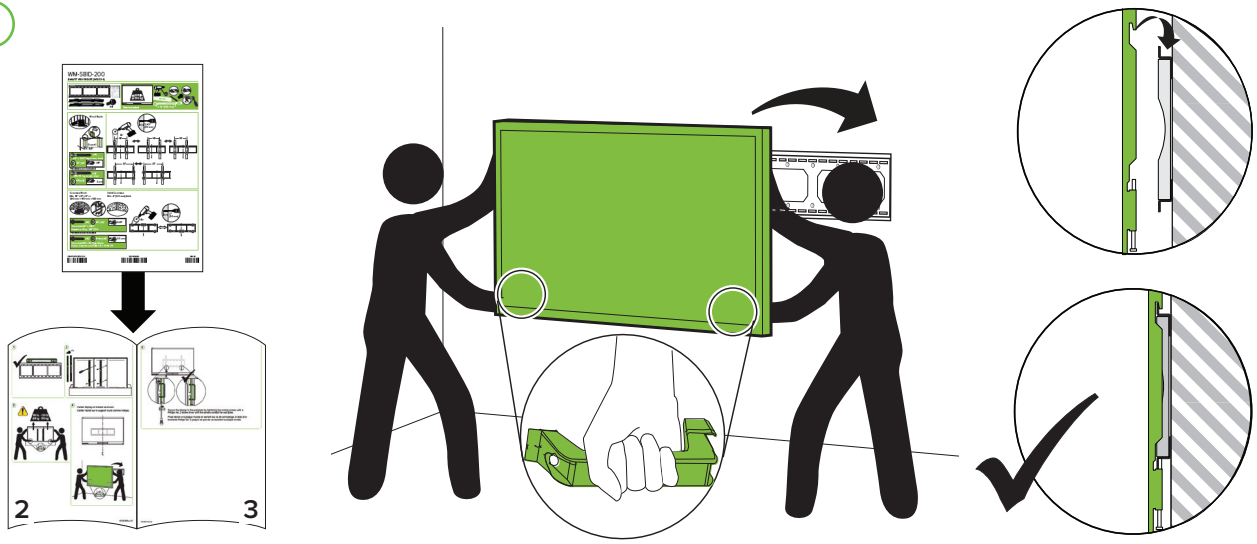

10

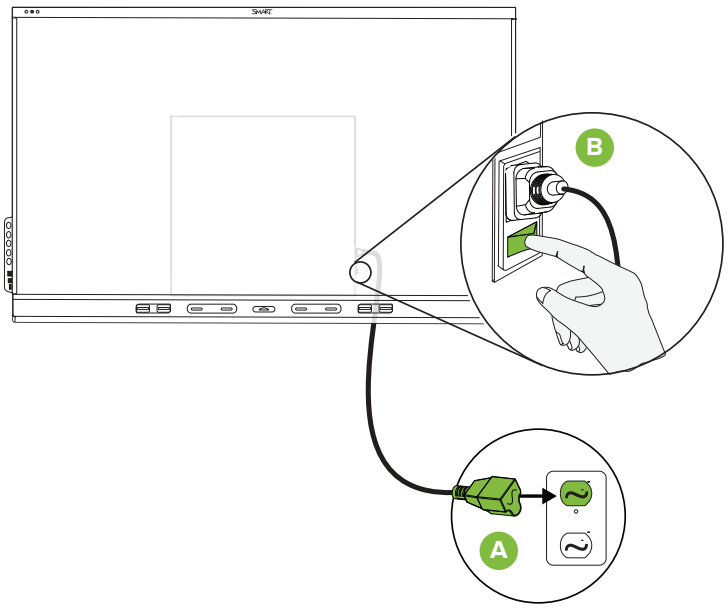

11

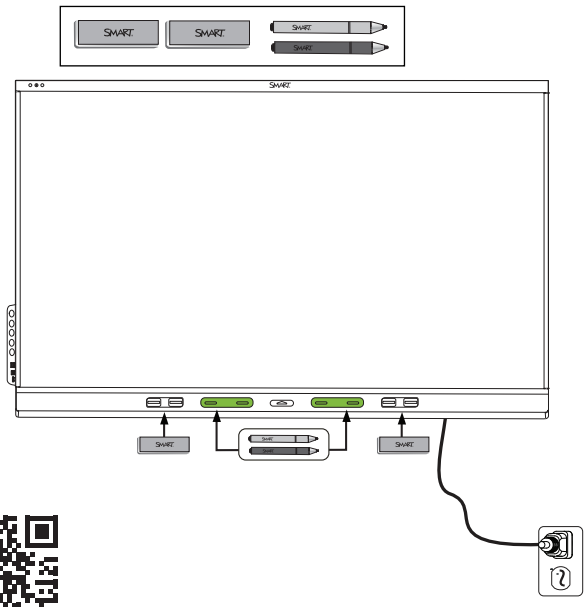

www.smarttech.com/qrsbid6000s

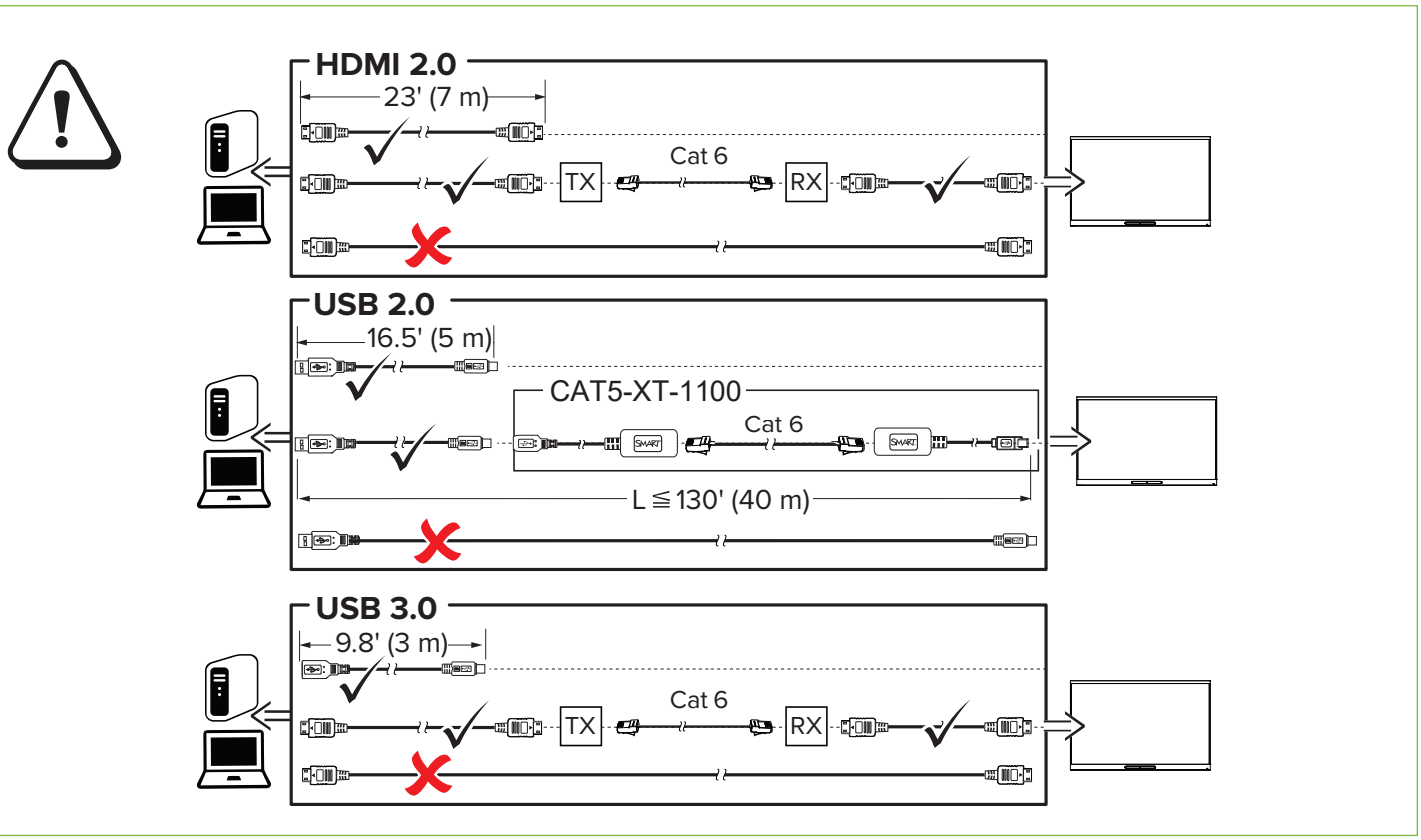
HDMI 2.0
23' (7 m)
Cat 6
TX
RX
USB 2.0
16.5' (5 m)
CAT5-XT-1100
Cat 6
L ≦ 130' (40 m)
USB 3.0
9.8' (3 m)
Cat 6
TX
RX

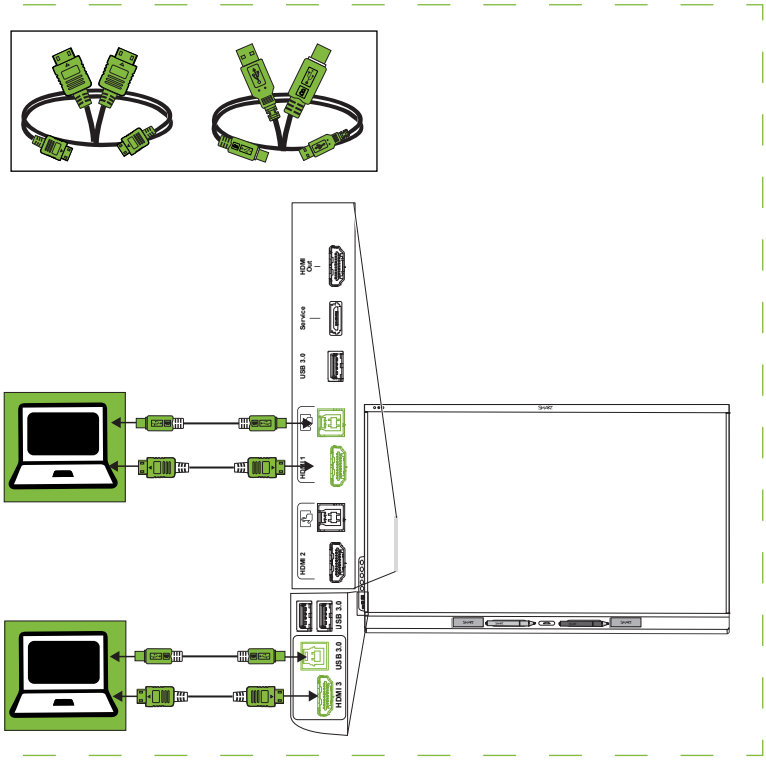

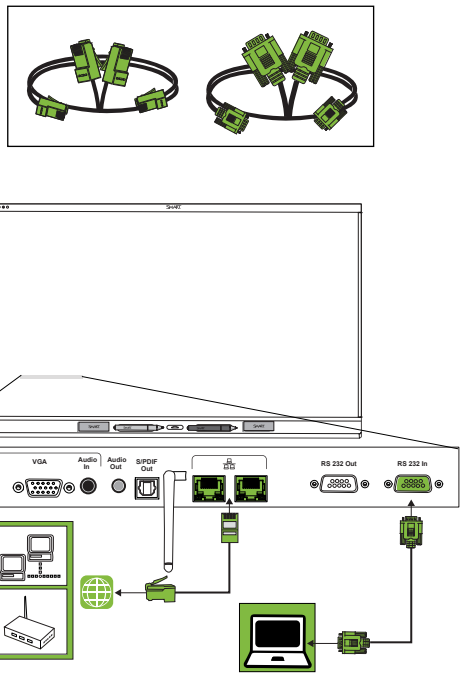
VGA
Audio In
Audio Out
S/PDIF Out
RS 232 Out
RS 232 In

SBID-60xxS • SBID-60xxS-P • SBID-60xxS-PW

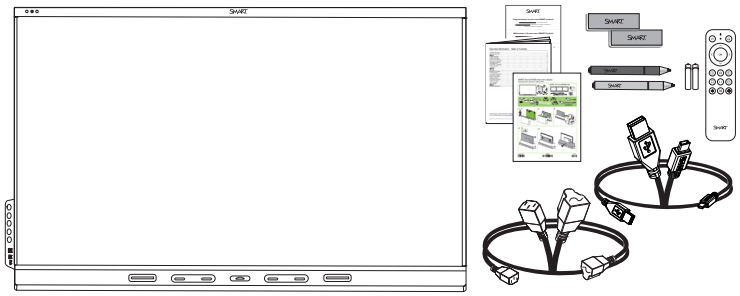

SMART wall mount (WM-SBID-200)

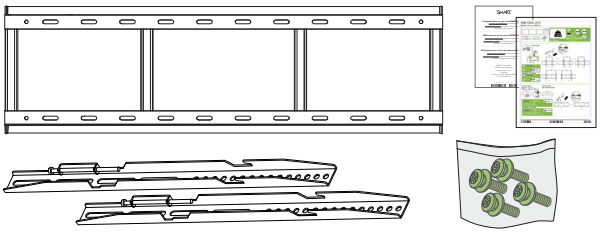

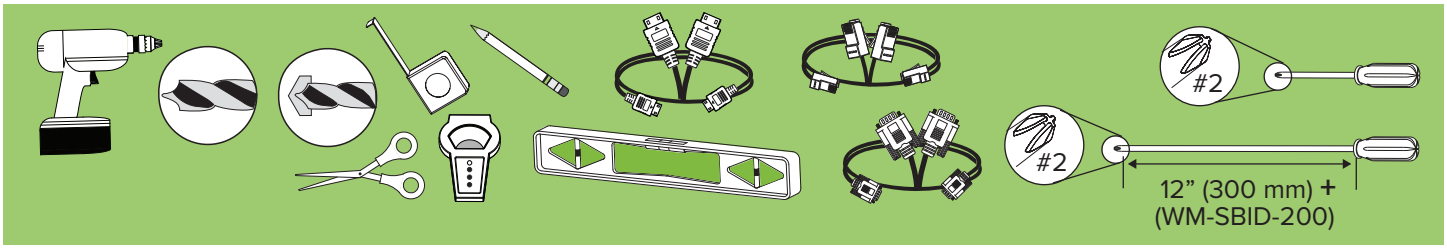

1 A

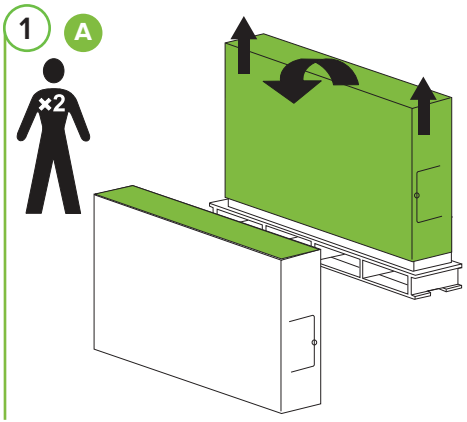

B

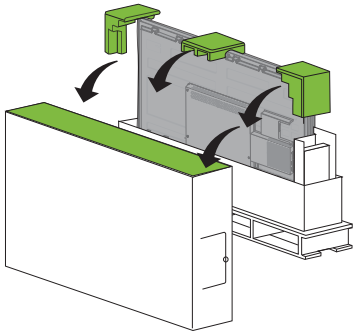

2

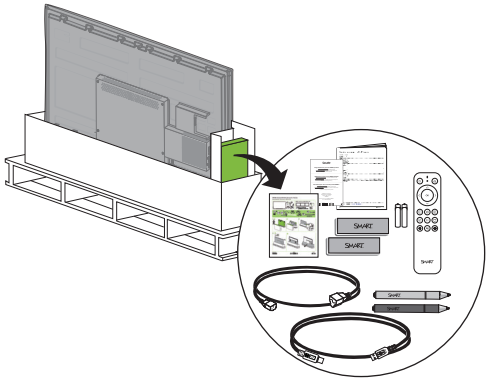

3 A

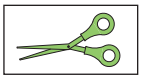

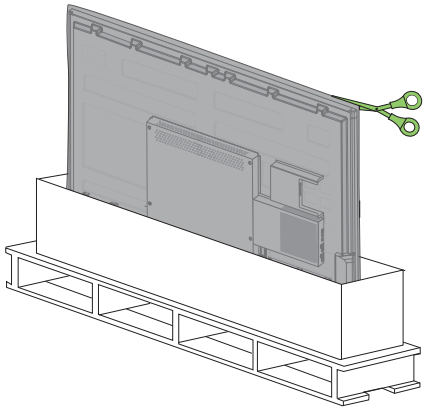

B

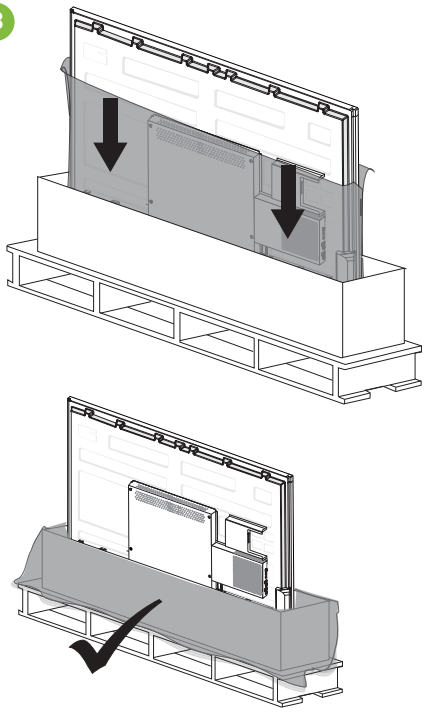

SBID-60xxS-P
SBID-60xxS-PW

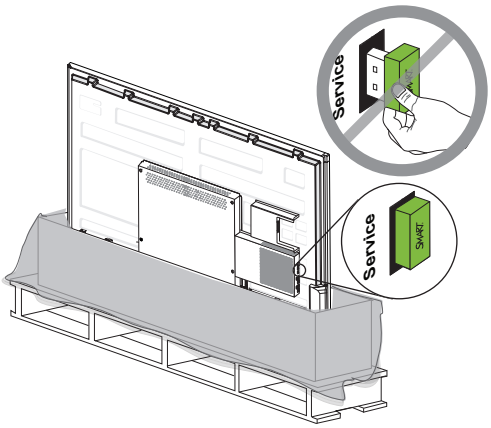

4

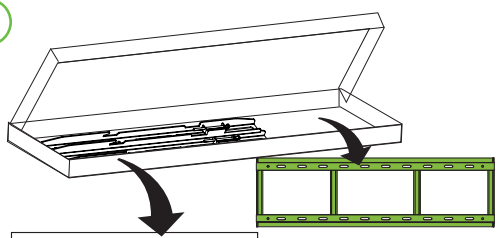

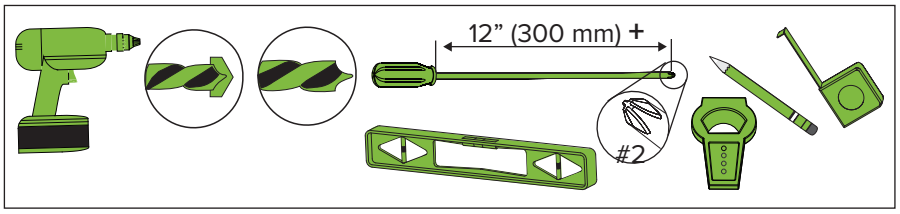

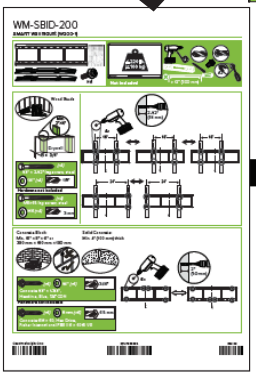

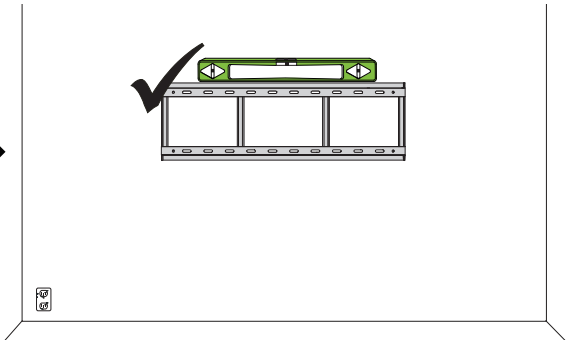

5

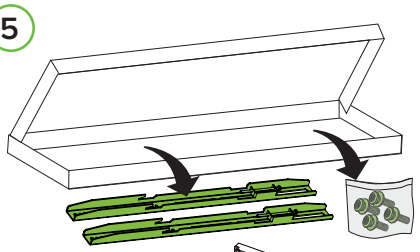

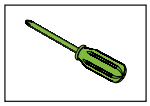

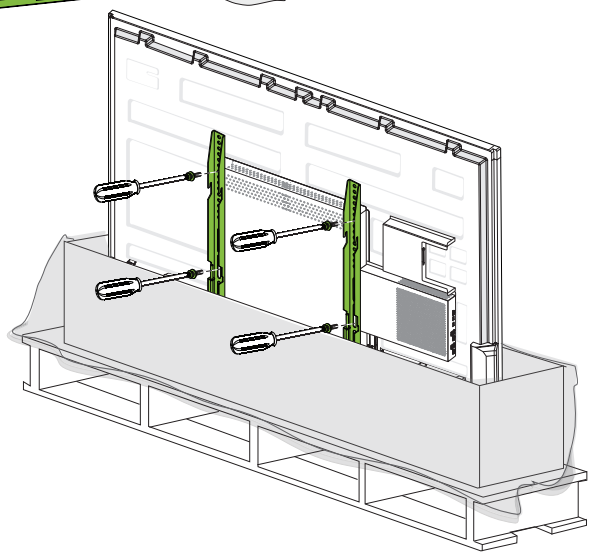

6

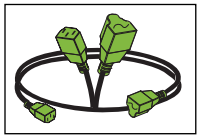

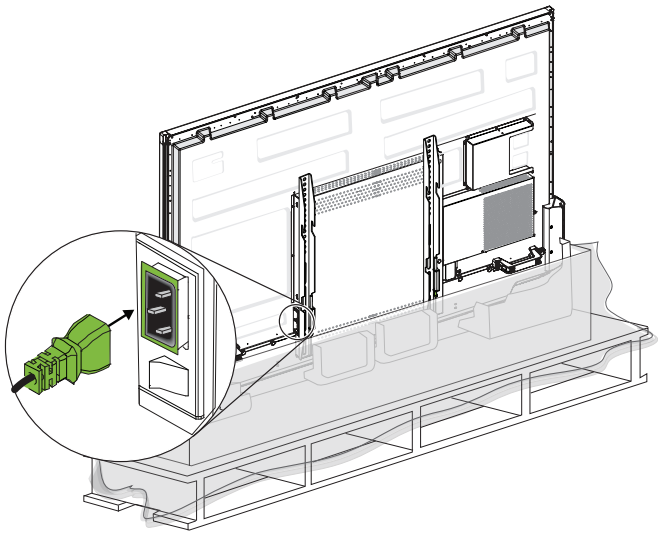

7





SBID-6265S



SBID-6275S



SBID-6286S

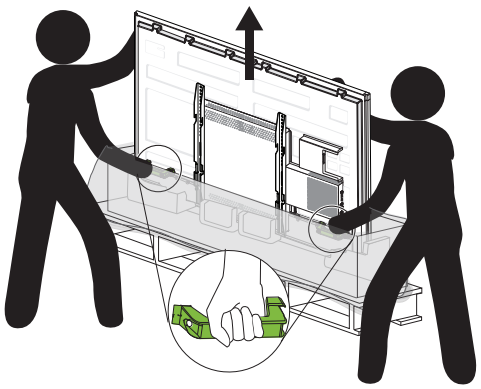

8

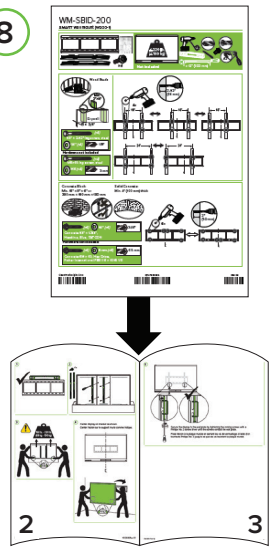

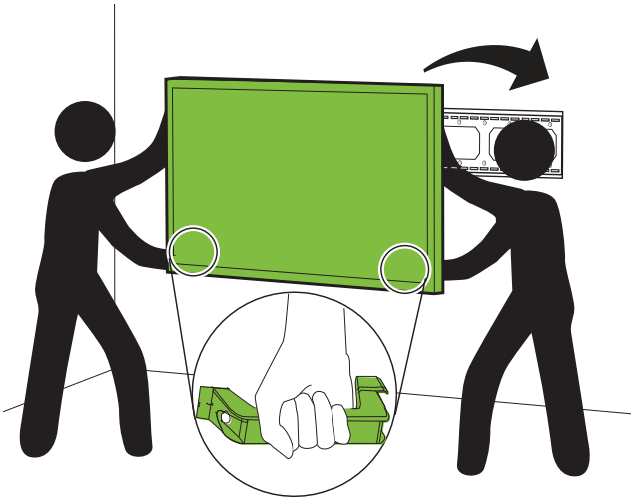

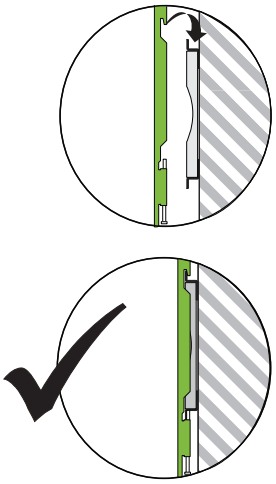

9

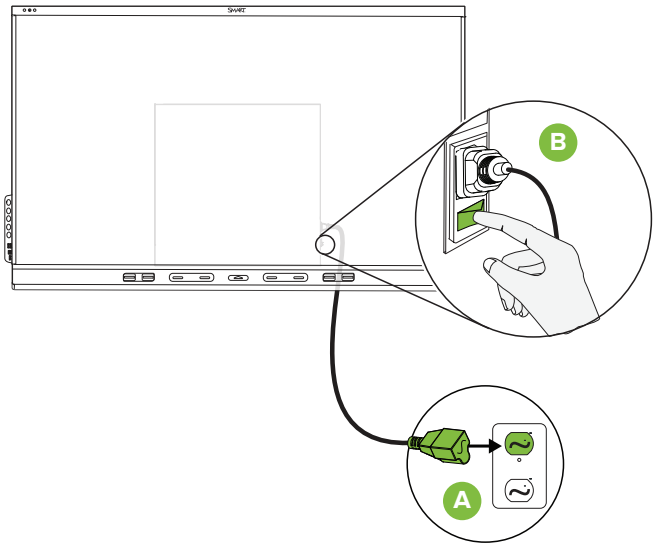

10

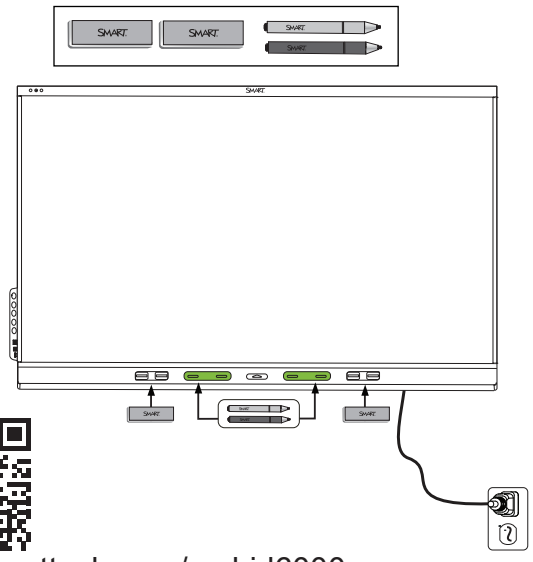

www.smarttech.com/qrsbid6000s

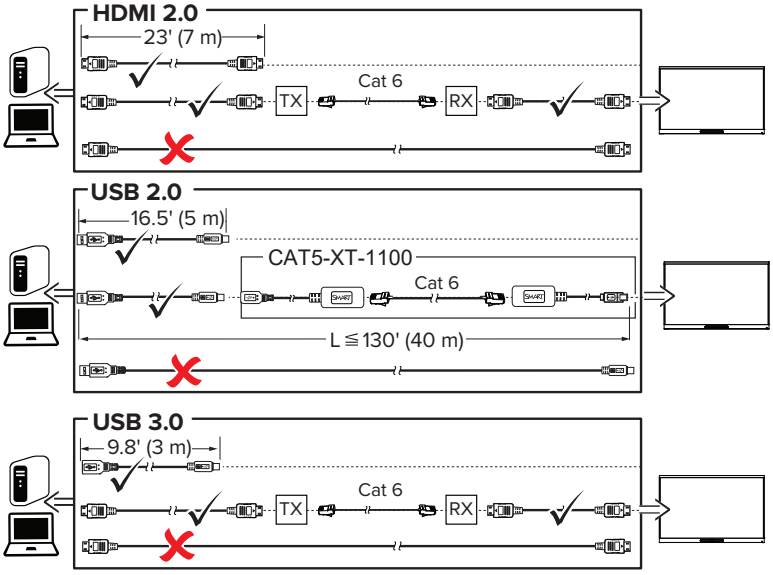

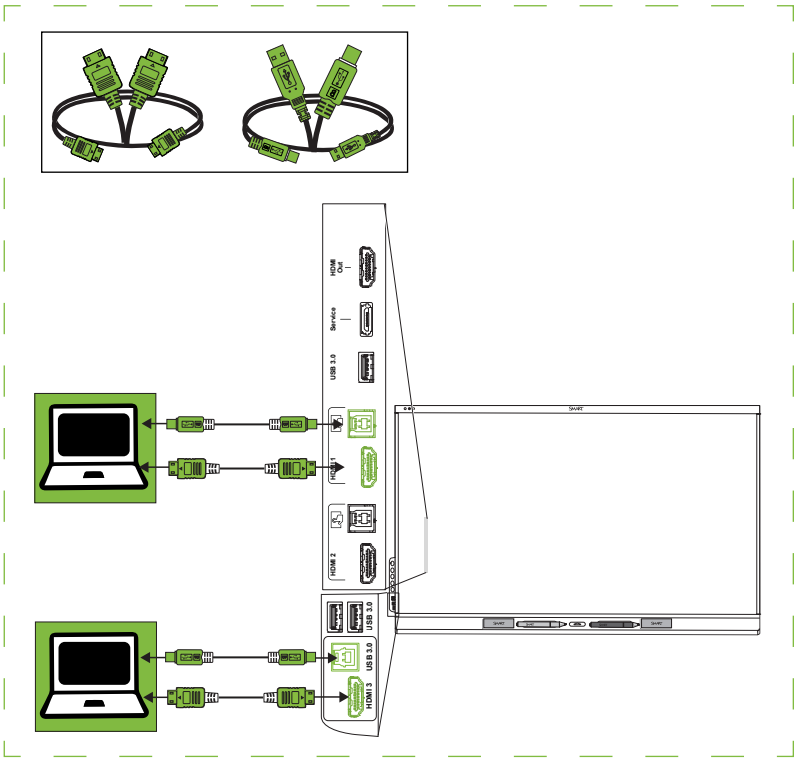

Was this document helpful?
smarttech.com/docfeedback/171572

EU Declaration of Conformity

Hereby, SMART Technologies ULC declares that the radio equipment type Interactive Display, regulatory models IDS665-1, IDS675-1 and IDS686-1 are in compliance with Directive 2014/53/EU. The full text of the EU declaration of conformity is available at the following internet address: www.smarttech.com/compliance
www.smarttech.com/compliance.

The frequency band and the maximum transmitted power in EU are listed below:
13.56MHz – 60dBuV/m @3m
2400MHz – 2483.5MHz: 27dBm (EIRP), 5150MHz – 5350MHz: 19dBm (EIRP) 5470MHz – 5725MHz: 19dBm (EIRP)

Restrictions in AT/BE/BG/CZ/DK/EE/FR/DE/IS/IE/IT/EL/ES/CY/LV/LI/LT/LU/HU/MT/NL/NO/PL/PT/RO/SI/SK/TR/FI/SE/CH/UK/HR. 5150MHz-5350MHz is for indoor use only.

Caution: Exposure to Radio Frequency Radiation
This equipment complies with EU radiation exposure limits set forth for an uncontrolled environment. This equipment should be installed and operated with minimum distance 20 cm between the radiator and your body.

Hardware environmental compliance

SMART Technologies supports global efforts to ensure that electronic equipment is manufactured, sold and disposed of in a safe and environmentally friendly manner.

Waste Electrical and Electronic Equipment and Battery regulations (WEEE and Battery Directives)

Electrical and electronic equipment contain substances that can be harmful to the environment and to human health. The crossed-out wheeled bin symbol indicates that products should be disposed of in the appropriate recycling stream and not as regular waste.

Batteries

The product contains a CR2032 coin cell battery (Not user accessible). The remote contains two AAA batteries. Recycle or dispose of batteries properly. See **smarttech.com/compliance** for more information.

Perchlorate material

The coin cell battery contains perchlorate material. Special handling may apply. See **dtsc.ca.gov/hazardouswaste/perchlorate**

support.smarttech.com
support.smarttech.com/contact-support

© 2019 SMART Technologies ULC. All rights reserved. SMART Board, smarttech, the SMART logo and all SMART taglines are trademarks or registered trademarks of SMART Technologies ULC in the U.S. and/or other countries. All other third-party product and company names may be trademarks of their respective owners. Contents are subject to change without notice. This product and/or use thereof covered by one or more of the following U.S. patents; **smarttech.com/patents.** November 12, 2019

1033907 Rev 02