# DATASHEET - STN0,1(400/24)

**Control transformer, 0.1 kVA, Rated input voltage 400± 5 % V, Rated output voltage 24 V**

| | |
|---|---|
| **Part no.** | **STN0,1(400/24)** |
| **Catalog No.** | **204943** |
| **Alternate Catalog No.** | **STN0P1-I2-B2** |

## Delivery program

| | | | |
|---|---|---|---|
| Product range | | | Single-phase control transformers ST... |
| Basic function | | | Single-phase STN control transformers |
| Rated input voltage | | V | 400± 5 % |
| Rated output voltage | | V | 24 |
| Rated power | | kVA | 0.1 |
| Short-time rating | | kVA | 0.16 |
| Terminal diagram / contact assignment | | | 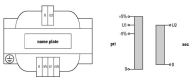 |
| Cu factor 0,30 | | | |

## Technical data

### General

| | | | |
|---|---|---|---|
| Standards | | | |
| Built and tested to | | | IEC/EN 61558-2-2<br>VDE 0570 Part 2-2 |
| Suitable for use to | | | IEC/EN 60204-1, ÖVE-EN 13<br>VDE 0113, VDE 0100 Part 410 |
| Ambient temperature | | | -25 - 40 |

### Characteristics

| | | | |
|---|---|---|---|
| Terminations | | | ● (< 115 A) |
| Connection lugs | | | ● (> 115 A) |
| Insulation class | | | B |
| Rated frequency | | Hz | 50 - 60 |
| Primary tapping | | | ± 5 % |
| Degree of Protection | | | IP00 |
| Separate windings | | | ● |
| Fully vacuum-impregnated | | | ● |
| Rated duty factor | | % DF | 100 |

### Electrical characteristics

| | | | |
|---|---|---|---|
| Note | | | The following applies for the no-load loss, short-circuit loss (copper losses), short-circuit voltage and efficiency values: all details relate to a temperature of 20 °C |
| Total weight | | kg | 1.5 |
| No-load losses | | W | 7 |
| Short-circuit losses | | W | 15 |
| Shortcircuit voltage | | % | 10 |
| Efficiency | | | 0.84 |

## Design verification as per IEC/EN 61439

| | | | |
|---|---|---|---|
| Technical data for design verification | | | |
| Rated operational current for specified heat dissipation | $I_n$ | A | 0 |
| Heat dissipation per pole, current-dependent | $P_{vid}$ | W | 0 |
| Equipment heat dissipation, current-dependent | $P_{vid}$ | W | 0 |
| Static heat dissipation, non-current-dependent | $P_{vs}$ | W | 22 |
| Heat dissipation capacity | $P_{diss}$ | W | 0 |
| Operating ambient temperature min. | | °C | -25 |
| Operating ambient temperature max. | | °C | 40 |

| | | |
|---|---|---|
| IEC/EN 61439 design verification | | |
| 10.2 Strength of materials and parts | | |
| 10.2.2 Corrosion resistance | | Meets the product standard's requirements. |
| 10.2.3.1 Verification of thermal stability of enclosures | | Meets the product standard's requirements. |
| 10.2.3.2 Verification of resistance of insulating materials to normal heat | | Meets the product standard's requirements. |
| 10.2.3.3 Verification of resistance of insulating materials to abnormal heat and fire due to internal electric effects | | Meets the product standard's requirements. |
| 10.2.4 Resistance to ultra-violet (UV) radiation | | Meets the product standard's requirements. |
| 10.2.5 Lifting | | Does not apply, since the entire switchgear needs to be evaluated. |
| 10.2.6 Mechanical impact | | Does not apply, since the entire switchgear needs to be evaluated. |
| 10.2.7 Inscriptions | | Meets the product standard's requirements. |
| 10.3 Degree of protection of ASSEMBLIES | | Does not apply, since the entire switchgear needs to be evaluated. |
| 10.4 Clearances and creepage distances | | Meets the product standard's requirements. |
| 10.5 Protection against electric shock | | Does not apply, since the entire switchgear needs to be evaluated. |
| 10.6 Incorporation of switching devices and components | | Does not apply, since the entire switchgear needs to be evaluated. |
| 10.7 Internal electrical circuits and connections | | Is the panel builder's responsibility. |
| 10.8 Connections for external conductors | | Is the panel builder's responsibility. |
| 10.9 Insulation properties | | |
| 10.9.2 Power-frequency electric strength | | Is the panel builder's responsibility. |
| 10.9.3 Impulse withstand voltage | | Is the panel builder's responsibility. |
| 10.9.4 Testing of enclosures made of insulating material | | Is the panel builder's responsibility. |
| 10.10 Temperature rise | | The panel builder is responsible for the temperature rise calculation. Eaton will provide heat dissipation data for the devices. |
| 10.11 Short-circuit rating | | Is the panel builder's responsibility. The specifications for the switchgear must be observed. |
| 10.12 Electromagnetic compatibility | | Is the panel builder's responsibility. The specifications for the switchgear must be observed. |
| 10.13 Mechanical function | | The device meets the requirements, provided the information in the instruction leaflet (IL) is observed. |

## Technical data ETIM 8.0

| | | |
|---|---|---|
| Low-voltage industrial components (EG000017) / One-phase control transformer (EC002486) | | |
| Electric engineering, automation, process control engineering / Transformer, converter, coil / Control transformer / One-phase control transformer (ecl@ss10.0.1-27-03-13-02 [AAB620015]) | | |
| Built as safety transformer | | No |
| Built as isolating transformer | | No |
| Built as energy saving transformer | | No |
| Primary voltage 1 | V | 400 - 400 |
| Primary voltage 2 | V | 0 - 0 |
| Primary voltage 3 | V | 0 - 0 |
| Primary voltage 4 | V | 0 - 0 |
| Primary voltage 5 | V | 0 - 0 |
| Primary voltage 6 | V | 0 - 0 |
| Primary voltage 7 | V | 0 - 0 |
| Primary voltage 8 | V | 0 - 0 |
| Primary voltage 9 | V | 0 - 0 |
| Primary voltage 10 | V | 0 - 0 |
| Secondary voltage 1 | V | 24 - 24 |
| Secondary voltage 2 | V | 0 - 0 |
| Secondary voltage 3 | V | 0 - 0 |
| Secondary voltage 4 | V | 0 - 0 |
| Secondary voltage 5 | V | 0 - 0 |
| Secondary voltage 6 | V | 0 - 0 |
| Secondary voltage 7 | V | 0 - 0 |
| Secondary voltage 8 | V | 0 - 0 |
| Secondary voltage 9 | V | 0 - 0 |
| Secondary voltage 10 | V | 0 - 0 |
| Rated apparent power | VA | 100 |

| | | | |
|---|---|---|---|
| Type of insulation material according to IEC 85 | | | B |
| Short-circuit-proof | | | No |
| Relative short circuit voltage | | % | 10 |
| Width | | mm | 85 |
| Height | | mm | 91 |
| Depth | | mm | 75 |
| Degree of protection (IP) | | | IP00 |
| Ring core | | | No |
| Suitable for mounting on PCB | | | No |
| Modular version | | | No |
| Conductor material | | | Copper |

## Approvals

| | | | |
|---|---|---|---|
| Product Standards | | | UL 506; UL5085-1; UL 5085-2; CSA-C22.2 No. 66; CSA-C22.2 No. 66.1-06; CSA-C22.2 No. 66.2-06; IEC/EN 61558-2-2; CE marking |
| UL File No. | | | E167225 |
| UL Category Control No. | | | XPTQ2, XPTQ8 |
| CSA File No. | | | UL report applies to both US and Canada |
| CSA Class No. | | | – |
| North America Certification | | | UL recognized, certified by UL for use in Canada |
| Specially designed for North America | | | No |
| Suitable for | | | Branch circuits |
| Max. Voltage Rating | | | 600 V AC |
| Degree of Protection | | | IEC: IP00, UL/CSA Type: - |

## Dimensions

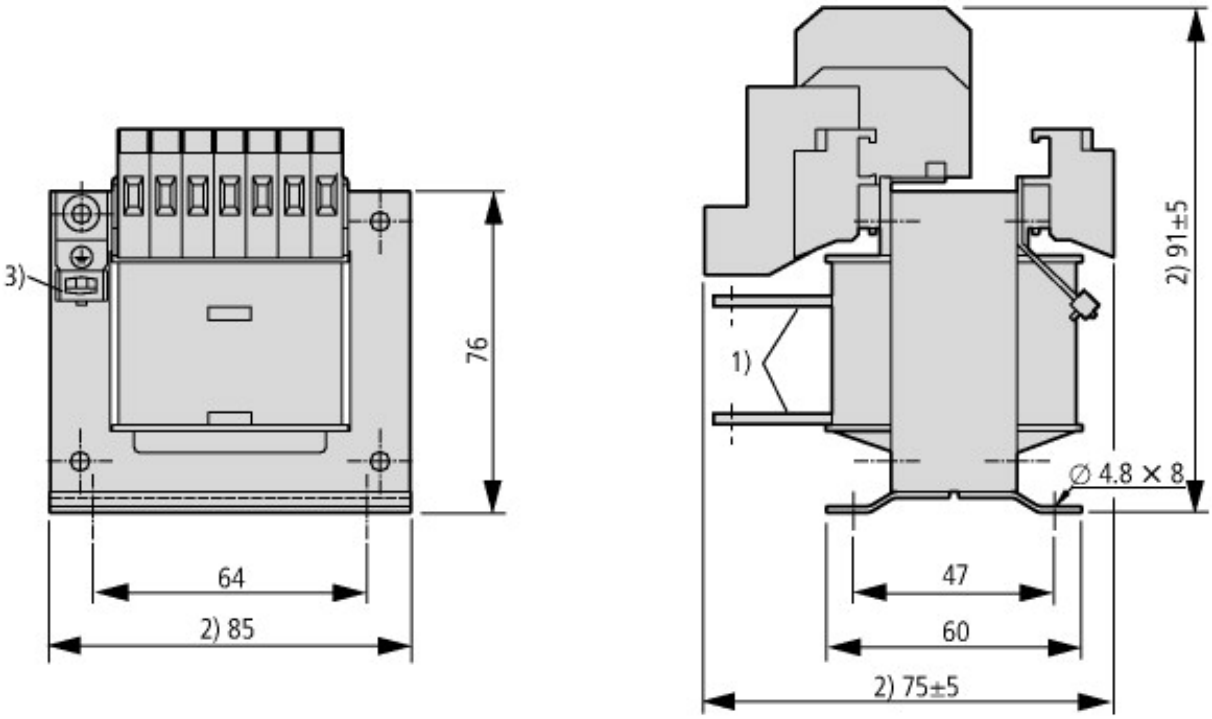


① Connection lugs
② Maximum space requirement
③ with STN0,06-02 ground connection at bottom


© 04/2022 by Eaton Industries GmbH