Lenovo
Yoga A940

SETUP GUIDE

PN:SP40S74232

Printed in China



Reduce | Reuse | Recycle

First Edition (November 2018)
© Copyright Lenovo 2018.

LIMITED AND RESTRICTED RIGHTS NOTICE:

If data or software is delivered pursuant to a General Services Administration "GSA" contract, use, reproduction, or disclosure is subject to restrictions set forth in Contract No GS-35F-05925.

1

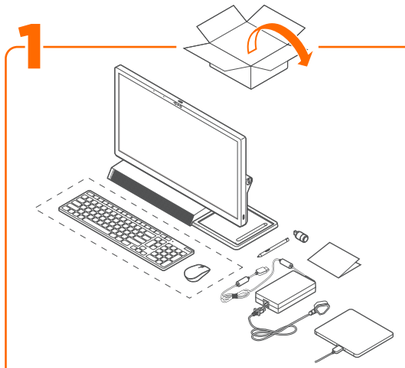

OR

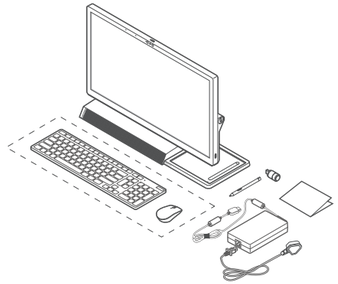

2

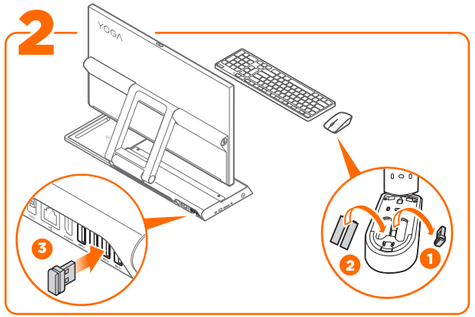

3

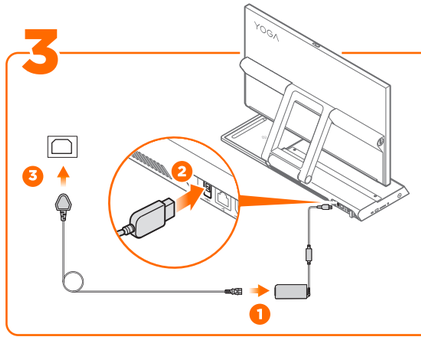

4

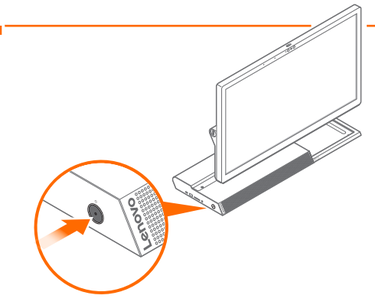

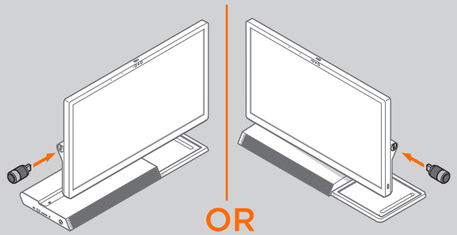
OR

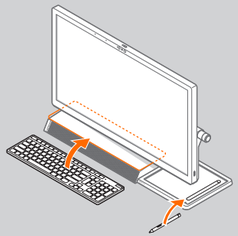

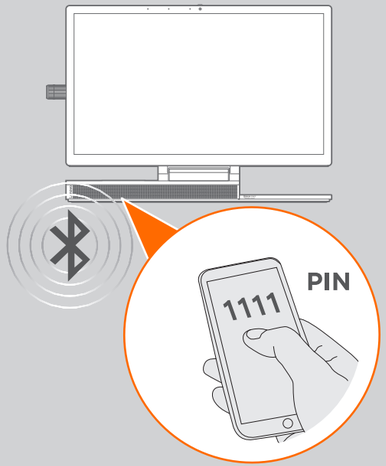
1111
PIN

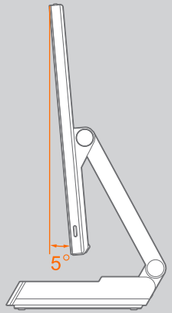
5°

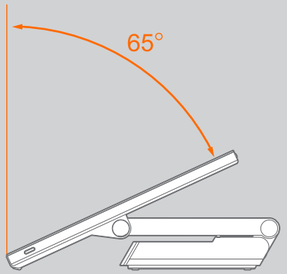
65°

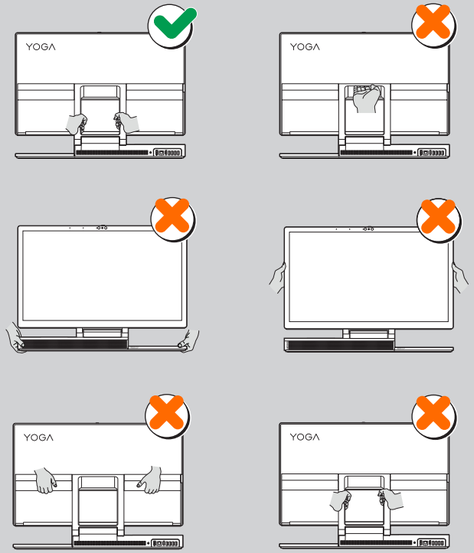
YOGA
YOGA
YOGA
YOGA