MG 120-G

Elegant and Compact Mini Tower Case with Tempered Glass Side Window



MG120-G sports an elegant and compact design with a darkmirror transparent front panel and a tempered glass side window, which shows a clear and attractive view of your computer's internal components. Moreover, it supports six cooling fans and three radiators for optimized cooling performance. This case is designed to allow users to contemplate their high-end system components and lighting effects they want.

Attractive Visibility

To help you appreciate your system's full beauty, a darkmirror transparent front panel with a full-sized tempered glass side window will allow users to contemplate system components and dazzling lighting effects.



* RGB fans are NOT included, please purchase separately.

Great Support forComponents

You won't believe how powerful a gaming beast you can build inside MG120-G. Its advanced support for graphics cards (up to two 330 mm-long graphics cards) will allow you to enjoy the latest games with smooth framerates.



Minimalist Beauty

The case's 3.5" bay and PSU cover provides a clean view of your case and keep the airflow smoothly.

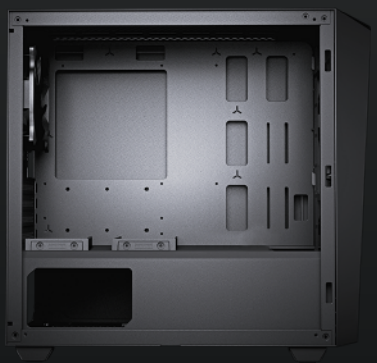



MG 120-G

Elegant and Compact Mini Tower Case with Tempered Glass Side Window

Top-notch Cooling

MG120-G 's compact layout allows you to install six fans and three water cooling radiators, with the front one up to 280mm. This immense cooling potential will enable you to choose freely the components you want in your build.

Water cooling radiator support

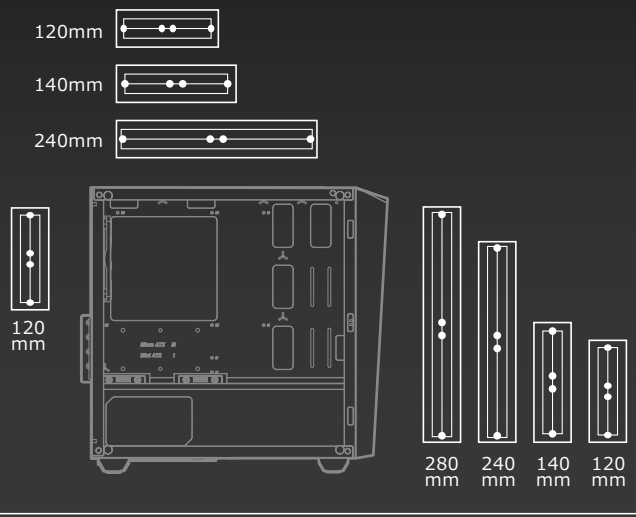

Air cooling support

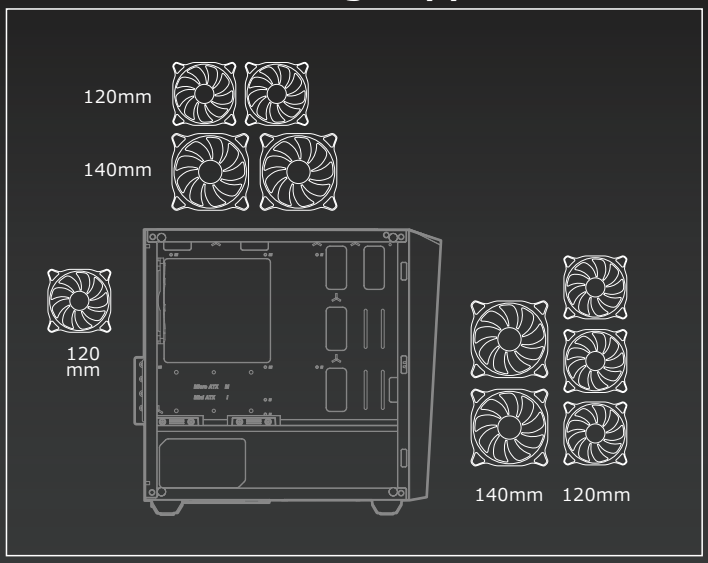

Incredible Storage

Up to two 3.5" HDDs and two 2.5" SSDs or four 2.5" SSDs will provide you with all the storage you need to install games and store all kinds of media.



There are two SSD trays in this case. Please select two locations you prefer to install.

Case Type	Mini Tower
Motherboard Type	Mini ITX / Micro ATX
Dimension (WxHxD)	210 x 415 x 400 (mm) / 8.27 x 16.34 x 15.75 (in)
Case Drive Bays	3.5" : 2 2.5" : 2+2 (converted from 3.5" drive bays)
I/O Panel	USB3.0x1, USB2.0 x 1, Mic x 1 / Audio x 1, Reset Button
Expansion Slots	4
PSU	Standard ATX PS2
Max. PSU length	160 (mm) / 6.3 (in)

Water Cooling Radiator Support	Front : 280mm / 240mm / 140mm / 120mm Top : 240mm / 140mm / 120mm Rear : 120mm
Cooling Fan Support	Front : 140mm x 2 / 120mm x 3 Top : 140mm x 2 / 120mm x 2 Rear : 120mm x 1 (pre-installed)
Maximum Number of Fans	6 Max.
Max. Graphics Card Length	330 (mm) / 12.99 (in)
Max. CPU Cooler Height	175 (mm) / 6.89 (in)
Cable Management	Yes

Product Name	MG120-G
Product Number (P/N)	385TMZ0.0002
EAN CODE	4715302442538
UPC CODE	192554001098
JAN CODE	4541995033872

Individual Size W/O Packaging Weight (N.Weight)	5.23 (kg)
Individual Packaging Weight (G.Weight)	6.34 (kg)
Individual Size W/O Packaging (WxHxD)	210 x 415 x 400 (mm) / 8.26 x 16.33 x 15.74 (in)
Individual Packaging Size (WxHxD)	258 X 481 x 440 (mm) / 10.15 x 18.93 x 17.32 (in)