AKM 232/IX

12NC: 857123220700

GTIN (EAN) code: 8003437932700

SENSING THE DIFFERENCE



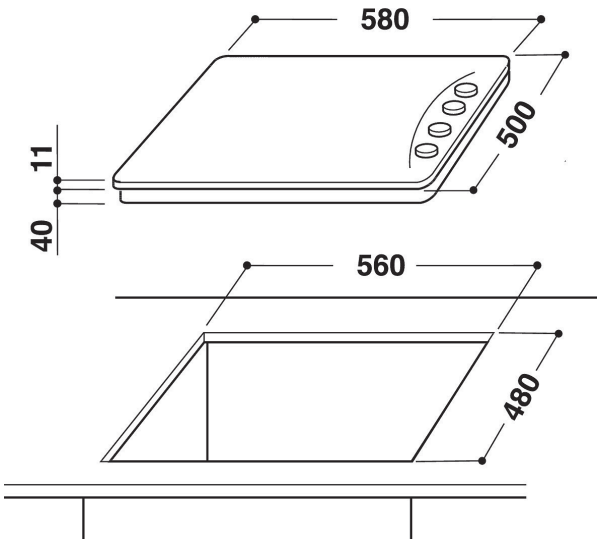

Whirlpool gas hob: 4 gas burners - AKM 232/IX

Standard Whirlpool technologies and features for you to enjoy.

Stainless Steel
For the stylish modern look in your kitchen.

Lateral Controls
Practical design. Modern, beautiful and practical: the lateral controls of this Whirlpool Hob are designed to add an extra touch of style to your kitchen.

- Enamel Pan Supports
- Electromagnetic safety device for each burner
- 2 Rectangular N.3 Rod iron grids
- Lateral controls
- 60 cm hob
- Mechanical control
- Ignition type: button
- 4 Burners
- 4 burners: 1 Rapid 3000 W burner, 1 Semirapid 1650 W burner, 1 Semirapid 1650 W burner, and 1 Auxiliary 1000 W burner.
- Supply cord included
- Dimensions HxWxD: 51x580x500 mm
- Niche dimensions HxWxD: 30x560x480 mm
- Voltage: 230 V
- Gas Connection Rating: 7300 W
- Gas Type: G20

AKM 232/IX

12NC: 857123220700

GTIN (EAN) code: 8003437932700

Whirlpool
SENSING THE DIFFERENCE

MAIN FEATURES

Product group	Hob
Construction type	Built-in
Type of control	Mechanical
Type of control settings	N/A
Number of gas burners	4
Number of electric cooking zones	0
Number of electric plates	0
Number of radiant plates	0
Number of halogen plates	0
Number of induction plates	0
Number of electric warming zones	0
Location of control panel	Lateral
Basic surface material	Inox
Main colour of product	Inox
Electrical connection rating (W)	0
Gas connection rating (W)	7300
Current (A)	0
Voltage (V)	230
Frequency (Hz)	50
Length of Electrical Supply Cord (cm)	0
Plug type	Schuko
Gas connection	Cilindric
Width of the product	580
Height of the product	51
Depth of the product	500
Minimum niche height	30
Minimum niche width	560
Niche depth	480
Net weight (kg)	8
Automatic programmes	No

TECHNICAL FEATURES

Power on indicator	No
Number of indicators	0
Type of regulation	Temperature regulated
Type of lid	Without
Residual heat indicator	Without
Main on/off switch	No
Safety device	Yes
Timer	No

PERFORMANCES

Energy input	Gas