ThinkStation®

P520 User Guide

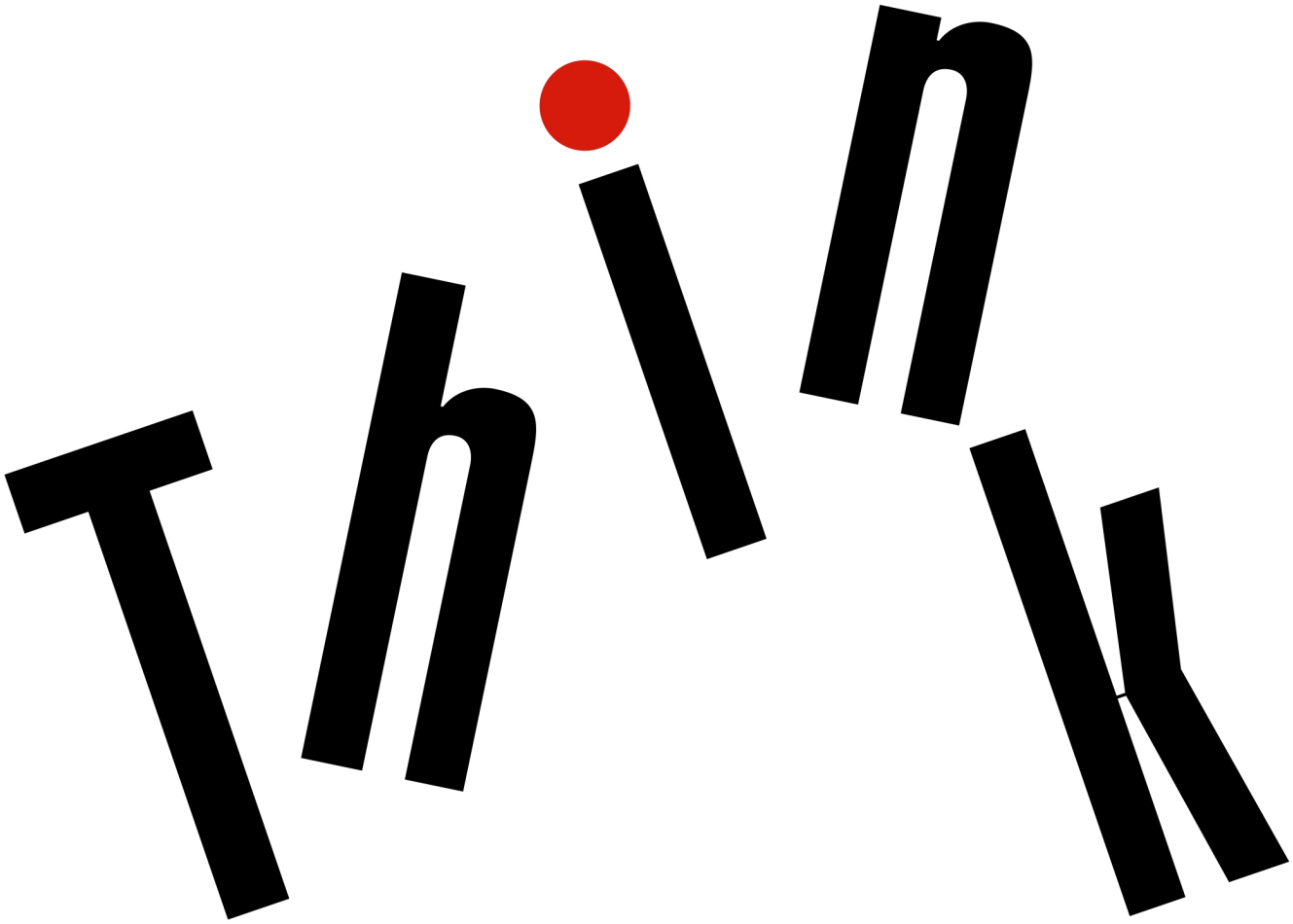

Lenovo

Machine Types: 30BE, 30BF, 30BQ, and 30DC

Note: Before using this information and the product it supports, be sure to read and understand the “Read this first: Important safety information” on page iii and Appendix G “Notices” on page 157.

Eighth Edition (June 2020)

© Copyright Lenovo 2018, 2020.

LIMITED AND RESTRICTED RIGHTS NOTICE: If data or software is delivered pursuant to a General Services Administration “GSA” contract, use, reproduction, or disclosure is subject to restrictions set forth in Contract No. GS-35F-05925.

Contents

Read this first: Important safety information iii
Before using this manual iii
Service and upgrades iii
Static electricity prevention iv
Power cords and power adapters iv
Extension cords and related devices. v
Plugs and outlets v
External devices v
Heat and product ventilation v
Computer placement notices vi
Operating environment vi
Laser compliance statement vii
Hazardous energy statement vii
Lithium coin-cell battery notice vii
Using earphones, headphones, or a headset . . . viii
Cleaning and maintenance ix

Chapter 1. Product overview 1
Hardware locations 1
Front view 2
Rear view 4
Computer components 7
Parts on the system board 8
Internal storage drives 10
Machine type and model label 12
Computer features. 12
Computer specifications 15
Programs 16
Accessing a program on your computer . . . 16
An introduction to Lenovo programs 16

Chapter 2. Using your computer . . . 19
Registering your computer 19
Setting the computer volume 19
Using a disc 19
Guidelines about using the optical drive . . . 19
Handling and storing a disc 19
Playing and removing a disc 20
Recording a disc 20
Connecting to a network 21

Chapter 3. You and your computer . . 23
Arranging your workspace 23
Glare and lighting 23
Air circulation 23
Electrical outlet locations and cable lengths . . 23
Comfort 23
Accessibility information 24
Cleaning your computer 27
Maintenance 27
Basic maintenance tips 27
Good maintenance practices 27
Keeping your computer current 28
Moving your computer 28

Chapter 4. Security 29
Locking your computer 29
Locking the computer cover 29
Attaching a Kensington-style cable lock . . . 30
Viewing and changing security settings in the Setup Utility program 30
Using passwords and Windows accounts 30
Using fingerprint authentication 31
Using the cover presence switch 31
Using firewalls 31
Protecting data against viruses 32
Using the Smart USB Protection function 32
Computrace Agent software embedded in firmware (for selected models) 32
Trusted Platform Module (TPM). 32
Intel BIOS guard 33

Chapter 5. Advanced configuration 35
Using the Setup Utility program 35
Starting the Setup Utility program 35
Changing the display mode of the Setup Utility program 35
Changing the display language of the Setup Utility program 35
Enabling or disabling a device 36
Enabling or disabling the automatic power-on of your computer 36
Enabling or disabling the ErP LPS compliance mode 36
Enabling or disabling the configuration change detection 37
Changing the BIOS settings before installing a new operating system 37
Using BIOS passwords 37
Selecting a startup device 39
Changing the fan speed level 40
Exiting the Setup Utility program 40
Updating and recovering the BIOS 40
Configuring RAID 41
An Introduction to RAID 42

© Copyright Lenovo 2018, 2020

Configuring RAID with Intel RSTe 42
Configuring RAID with AVAGO MegaRAID Configuration Utility 43
Configuring RAID with Intel Virtual RAID on CPU 45

Chapter 6. Troubleshooting, diagnostics, and recovery 49
Basic procedure for resolving computer problems 49
Troubleshooting 49
Startup problems 49
Audio problems 50
CD or DVD problems 51
Intermittent problems 52
Storage drive problems 52
Ethernet LAN problems 52
Wireless LAN problem 53
Bluetooth problems 54
Performance problems 54
Serial connector problem 55
USB device problems 56
Software and driver problems 56
Diagnosing problems 56
Recovery information 58

Chapter 7. Hardware removal and installation 59
Handling static-sensitive devices 59
Preparing your computer and removing the computer cover 59
Removing and installing hardware 61
External options 61
Device in the flex bay 62
Storage drive in the front-access storage enclosure 65
Device in the multi-drive conversion kit 72
Cover presence switch 83
Storage drive in a storage drive bay 85
Storage drive cage 93
M.2 solid-state drive 96
Power supply assembly 107
PCIe card 109
Full-length PCIe card 115
Heat-sink-and-fan assembly 118
Super capacitor module 119
Front fan assembly 121
Rear fan assembly 123
Memory module 124
Coin-cell battery 126
Wi-Fi units 127
Completing the parts replacement 134

Chapter 8. Getting information, help, and service 137
Information resources 137
Accessing the user guide in various languages 137
Windows help system 137
Safety and warranty 137
Lenovo Web site 137
Lenovo Support Web site 137
Frequently asked questions 138
Help and service 138
Calling for service 138
Using other services 139
Purchasing additional services 139

Appendix A. System memory speed 141

Appendix B. Supplemental information about the Ubuntu operating system 143

Appendix C. Regulatory and TCO Certified information of countries and regions 145

Appendix D. WEEE and recycling information of countries and regions 149

Appendix E. Restriction of Hazardous Substances (RoHS) Directive of countries and regions 153

Appendix F. ENERGY STAR model information 155

Appendix G. Notices 157

Appendix H. Trademarks 159

Read this first: Important safety information

This chapter contains the safety information that you must be familiar with.

Before using this manual

CAUTION:
Before using this manual, be sure to read and understand all the related safety information for this product. Refer to the information in this section and the safety information in the *Safety, Warranty, and Setup Guide* **that you received with this product. Reading and understanding this safety information reduces the risk of personal injury and damage to your product.**

If you no longer have a copy of the *Safety, Warranty, and Setup Guide*, you can obtain a Portable Document Format (PDF) version from the Lenovo Support Web site at https://support.lenovo.com. The Lenovo Support Web site also provides the *Safety, Warranty, and Setup Guide* and this *User Guide* in additional languages.

Service and upgrades

Do not attempt to service a product yourself unless instructed to do so by the Customer Support Center or your documentation. Only use a Service Provider who is approved to repair your particular product.

Note: Some computer parts can be upgraded or replaced by the customer. Upgrades typically are referred to as options. Replacement parts approved for customer installation are referred to as Customer Replaceable Units, or CRUs. Lenovo provides documentation with instructions when it is appropriate for customers to install options or replace CRUs. You must closely follow all instructions when installing or replacing parts. The Off state of a power indicator does not necessarily mean that voltage levels inside a product are zero. Before you remove the covers from a product equipped with a power cord, always ensure that the power is turned off and that the product is unplugged from any power source. For more information about CRUs, refer to Chapter 7 “Hardware removal and installation” on page 59. If you have any questions or concerns, contact the Customer Support Center.

Although there are no moving parts in your computer after the power cord has been disconnected, the following warnings are required for your safety.

CAUTION:



Keep fingers and other parts of your body away from hazardous, moving parts. If you suffer an injury, seek medical care immediately.

CAUTION:



Avoid contact with hot components inside the computer. During operation, some components become hot enough to burn the skin. Before you open the computer cover, turn off the computer, disconnect power, and wait approximately 10 minutes for the components to cool.

CAUTION:



After replacing a CRU, reinstall all protective covers, including the computer cover, before connecting power and operating the computer. This action is important to help prevent unexpected electrical shock and help ensure the containment of an unexpected fire that could happen under extremely rare conditions.

CAUTION:

© Copyright Lenovo 2018, 2020



When replacing CRUs, be cautious of sharp edges or corners that might cause injury. If you suffer an injury, seek medical care immediately.

Static electricity prevention

Static electricity, although harmless to you, can seriously damage computer components and options. Improper handling of static-sensitive parts can damage the part. When you unpack an option or CRU, do not open the static-protective package containing the part until the instructions direct you to install it.

When you handle options or CRUs, or perform any work inside the computer, take the following precautions to avoid static-electricity damage:

- Limit your movement. Movement can cause static electricity to build up around you.
- Always handle components carefully. Handle adapters, memory modules, and other circuit boards by the edges. Never touch exposed circuitry.
- Prevent others from touching components.
- When you install a static-sensitive option or CRU, touch the static-protective package containing the part to a metal expansion-slot cover or other unpainted metal surface on the computer for at least two seconds. This reduces static electricity in the package and your body.
- When possible, remove the static-sensitive part from the static-protective packaging and install the part without setting it down. When this is not possible, place the static-protective packaging on a smooth, level surface and place the part on it.
- Do not place the part on the computer cover or other metal surface.

Power cords and power adapters

Use only the power cords and power adapters supplied by the product manufacturer. Do not use the ac power cord for other devices.

The power cords shall be safety approved. For Germany, it shall be H05VV-F, 3G, 0.75 mm^2, or better. For other countries, the suitable types shall be used accordingly.

Never wrap a power cord around a power adapter or other object. Doing so can stress the cord in ways that can cause the cord to fray, crack, or crimp. This can present a safety hazard.

Always route power cords so that they will not be walked on, tripped over, or pinched by objects.

Protect power cord and power adapters from liquids. For instance, do not leave your power cord or power adapter near sinks, tubs, toilets, or on floors that are cleaned with liquid cleansers. Liquids can cause a short circuit, particularly if the power cord or power adapter has been stressed by misuse. Liquids also can cause gradual corrosion of power cord terminals and/or the connector terminals on a power adapter, which can eventually result in overheating.

Ensure that all power cord connectors are securely and completely plugged into receptacles.

Do not use any power adapter that shows corrosion at the ac input pins or shows signs of overheating (such as deformed plastic) at the ac input or anywhere on the power adapter.

Do not use any power cords where the electrical contacts on either end show signs of corrosion or overheating or where the power cord appears to have been damaged in any way.

Extension cords and related devices

Ensure that extension cords, surge protectors, uninterruptible power supplies, and power strips that you use are rated to handle the electrical requirements of the product. Never overload these devices. If power strips are used, the load should not exceed the power strip input rating. Consult an electrician for more information if you have questions about power loads, power requirements, and input ratings.

Plugs and outlets



If a receptacle (power outlet) that you intend to use with your computer equipment appears to be damaged or corroded, do not use the outlet until it is replaced by a qualified electrician.

Do not bend or modify the plug. If the plug is damaged, contact the manufacturer to obtain a replacement.

Do not share an electrical outlet with other home or commercial appliances that draw large amounts of electricity. Otherwise, unstable voltage might damage your computer, data, or connected devices.

Some products are equipped with a three-pronged plug. This plug fits only into a grounded electrical outlet. This is a safety feature. Do not defeat this safety feature by trying to insert it into a non-grounded outlet. If you cannot insert the plug into the outlet, contact an electrician for an approved outlet adapter or to replace the outlet with one that enables this safety feature. Never overload an electrical outlet. The overall system load should not exceed 80 percent of the branch circuit rating. Consult an electrician for more information if you have questions about power loads and branch circuit ratings.

Be sure that the power outlet you are using is properly wired, easily accessible, and located close to the equipment. Do not fully extend power cords in a way that will stress the cords.

Be sure that the power outlet provides the correct voltage and current for the product you are installing.

Carefully connect and disconnect the equipment from the electrical outlet.

External devices

Do not connect or disconnect any external device cables other than Universal Serial Bus (USB) cables while the computer power is on; otherwise, you might damage your computer. To avoid possible damage to connected devices, wait at least five seconds after the computer is shut down to disconnect external devices.

Heat and product ventilation



Computers, power adapters, and many accessories can generate heat when turned on and when batteries are charging. Always follow these basic precautions:

- Do not leave your computer, power adapter, or accessories in contact with your lap or any part of your body for an extended period when the products are functioning or when the battery is charging. Your computer, power adapter, and many accessories produce some heat during normal operation. Extended contact with the body could cause discomfort or, potentially, a skin burn.

© Copyright Lenovo 2018, 2020

- Do not charge the battery or operate your computer, power adapter, or accessories near flammable materials or in explosive environments.
- Ventilation slots, fans, and heat sinks are provided with the product for safety, comfort, and reliable operation. These features might inadvertently become blocked by placing the product on a bed, sofa, carpet, or other flexible surface. Never block, cover, or disable these features.

Inspect your desktop computer for dust accumulation at least once every three months. Before inspecting your computer, turn off the power and unplug the computer's power cord from the electrical outlet; then remove any dust from vents and perforations in the bezel. If you notice external dust accumulation, then examine and remove dust from the inside of the computer including heat sink inlet fins, power supply vents, and fans. Always turn off and unplug the computer before opening the cover. If possible, avoid operating your computer within two feet of high-traffic areas. If you must operate your computer in or near a high-traffic area, inspect and, if necessary, clean your computer more frequently.

For your safety and to maintain optimum computer performance, always follow these basic precautions with your desktop computer:

- Keep the cover closed whenever the computer is plugged in.
- Regularly inspect the outside of the computer for dust accumulation.
- Remove dust from vents and any perforations in the bezel. More frequent cleanings might be required for computers in dusty or high-traffic areas.
- Do not restrict or block any ventilation openings.
- Do not store or operate your computer inside furniture, as this might increase the risk of overheating.
- Airflow temperatures into the computer should not exceed 35°C (95°F).
- Do not install air filtration devices. They may interfere with proper cooling.

Computer placement notices

Inappropriate computer placement might cause harm to children.

- Place the computer on a sturdy piece of low-rise furniture or furniture that has been anchored.
- Do not place the computer at the edge of the furniture.
- Keep the computer cables out of the reach of children.
- Some items, such as toys, might attract children. Keep such items away from the computer.

Supervise children in rooms where the above safety instructions cannot be fully implemented.

Operating environment

The optimal environment in which to use your computer is 10°C–35°C (50°F–95°F) with humidity ranging between 35% and 80%. If your computer is stored or transported in temperatures less than 10°C (50°F), allow the cold computer to rise slowly to an optimal operating temperature of 10°C–35°C (50°F–95°F) before use. This process could take two hours in extreme conditions. Failure to allow your computer to rise to an optimal operating temperature before use could result in irreparable damage to your computer.

If possible, place your computer in a well-ventilated and dry area without direct exposure to sunshine.

Keep electrical appliances such as an electric fan, radio, high-powered speakers, air conditioner, and microwave oven away from your computer because the strong magnetic fields generated by these appliances can damage the monitor and data on the storage drive.

Do not place any beverages on top of or beside the computer or other connected devices. If liquid is spilled on or in the computer or a connected device, a short circuit or other damage might occur.

Do not eat or smoke over your keyboard. Particles that fall into your keyboard can cause damage.

Laser compliance statement

CAUTION:



When laser products (such as CD-ROMs, DVD drives, fiber optic devices, or transmitters) are installed, note the following:

- **Do not remove the covers. Removing the covers of the laser product could result in exposure to hazardous laser radiation. There are no serviceable parts inside the device.**
- **Use of controls or adjustments or performance of procedures other than those specified herein might result in hazardous radiation exposure.**

**DANGER**

Some laser products contain an embedded Class 3A or Class 3B laser diode. Note the following: Laser radiation when open. Do not stare into the beam, do not view directly with optical instruments, and avoid direct exposure to the beam.

Hazardous energy statement

**DANGER**



Disconnect all power cords from electrical outlets before removing the computer cover or any part that has the above label attached.

DO NOT disassemble components that have the above label attached. There are no serviceable parts inside these components.

Your product is designed for safe use. However, hazardous voltage, current, and energy levels are present inside any component that has this label attached. Disassembling of these components might cause fire or might even result in death. If you suspect a problem with one of these parts, contact a service technician.

Lithium coin-cell battery notice

**DANGER**

Danger of explosion if battery is incorrectly replaced.

© Copyright Lenovo 2018, 2020



When replacing the lithium coin-cell battery, use only the same type or equivalent type that is recommended by the manufacturer. The battery contains lithium and can explode if not properly used, handled, or disposed of. Swallowing the lithium coin-cell battery will cause chocking or severe internal burns in just two hours and might even result in death.

Keep batteries away from children. If the lithium coin-cell battery is swallowed or placed inside any part of the body, seek medical care immediately.

Do not:

- Throw or immerse into water
- Heat to more than 100 °C (212°F).
- Repair or disassemble
- Leave in an extremely low air pressure environment
- Leave in an extremely high-temperature environment
- Crush, puncture, cut, or incinerate

Dispose of the battery as required by local ordinances or regulations.

The following statement applies to users in the state of California, U.S.A.

California Perchlorate Information:

Products containing manganese dioxide lithium coin-cell batteries may contain perchlorate.

Perchlorate Material - special handling may apply, see http://www.dtsc.ca.gov/hazardouswaste/perchlorate/.

Using earphones, headphones, or a headset

- If your computer has both a headphone connector and an audio line-out connector, always use the headphone connector for earphones, headphones, or a headset. However, the headphone connector does not support the microphone of the headset.
- If your computer has both a headset connector and an audio line-out connector, always use the headset connector for earphones, headphones, or a headset.

CAUTION:



Excessive sound pressure from earphones and headphones can cause hearing loss. Adjustment of the equalizer to maximum increases the earphone and headphone output voltage and the sound pressure level. Therefore, to protect your hearing, adjust the equalizer to an appropriate level.

Excessive use of headphones or earphones for a long period of time at high volume can be dangerous if the output of the headphone or earphone connectors do not comply with specifications of EN 50332-2. The headphone output connector of your computer complies with EN 50332-2 Sub clause 7. This specification limits the computer's maximum wide band true RMS output voltage to 150 mV. To help protect against hearing loss, ensure that the headphones or earphones you use also comply with EN 50332-2 (Clause 7 Limits) or a wide band characteristic voltage of 75 mV. Using headphones that do not comply with EN 50332-2 can be dangerous due to excessive sound pressure levels.

If your Lenovo computer came with headphones or earphones in the package, as a set, the combination of the headphones or earphones and the computer already complies with the specifications of EN 50332-1. If

different headphones or earphones are used, ensure that they comply with EN 50332-1 (Clause 6.5 Limitation Values). Using headphones that do not comply with EN 50332-1 can be dangerous due to excessive sound pressure levels.

Cleaning and maintenance

Keep your computer and workspace clean. Shut down the computer and then disconnect the power cord before cleaning the computer. Do not spray any liquid detergent directly on the computer or use any detergent containing flammable material to clean the computer. Spray the detergent on a soft cloth and then wipe the computer surfaces.

© Copyright Lenovo 2018, 2020

Chapter 1. Product overview

This chapter provides basic information to help you get familiar with your computer.

Hardware locations

This section provides information about the locations of your computer hardware.

© Copyright Lenovo 2018, 2020

Front view

Note: The computer hardware might look slightly different from the illustration.

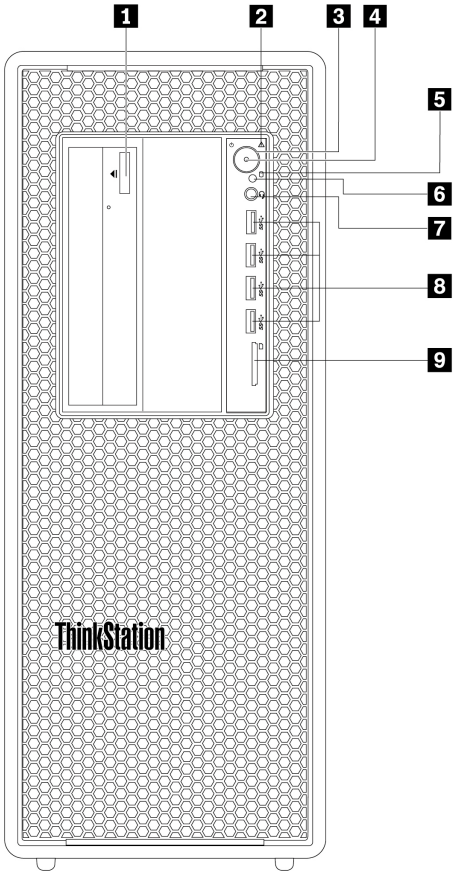

Figure 1. Front connectors, controls, and indicators

1 Optical-drive eject/close button (available on some models)	2 Signal diagnostic LED indicator
3 Power button	4 Power indicator
5 Storage drive activity indicator	6 Photoelectric sensor
7 Headset connector	8 USB 3.0 connectors (4)
9 SD card slot	

1 Optical-drive eject/close button (available on some models)

Press the button to eject or close the tray of the optical drive.

2 Signal diagnostic LED indicator

Off (when the computer is powered on): No error or issue is detected on your computer during normal operation.

On: A catastrophic error is detected on your computer during normal operation.

Blinking: An error or issue is detected on your computer during normal operation.

3 Power button

Press the power button to turn on your computer. If your computer is unresponsive, you can turn off the computer by pressing and holding the power button for four or more seconds.

4 Power indicator

When the power indicator is on, the computer is turned on.

5 Storage drive activity indicator

This indicator shows the status of the internal storage drives (such as hard disk drives or solid-state drives).

On: The storage drives are active and data is being transferred.

Off (when the computer is powered on): No data is being transferred or the storage drives are not in use.

6 Photoelectric sensor

This sensor receives the flash light sent by the Lenovo PC Diagnostics application installed in the smartphone. Then, the photoelectric sensor triggers the computer to send the tune of the detected error to the smartphone for users to decode the error.

7 Headset connector

Use this connector to attach a headset to your computer.

8 USB 3.0 connector (4)

Use this connector to attach a USB-compatible device, such as a USB keyboard, mouse, storage drive, or printer.

9 SD card slot

Insert a secure digital (SD) card into the slot to access the data on the card.

Rear view

Some connectors on the rear of your computer are color-coded to help you determine where to connect the cables on your computer.

Note: The computer hardware might look slightly different from the illustration.

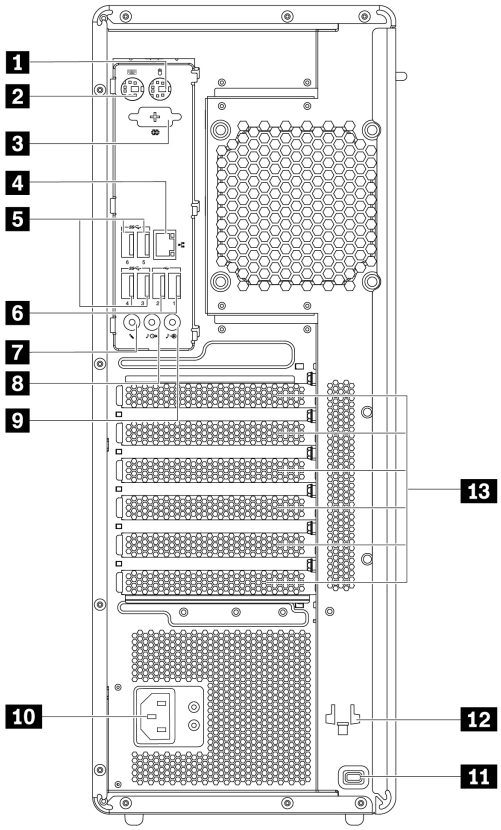

Figure 2. Rear view

1 PS/2 mouse connector	2 PS/2 keyboard connector
3 Optional serial connector	4 Ethernet connector
5 USB 3.0 connectors (4)	6 USB 2.0 connectors (2)
7 Microphone connector	8 Audio line-out connector
9 Audio line-in connector	10 Power-cord connector
11 Security-lock slot	12 Key-nest slots
13 PCI/PCIe card area*	

Notes: *A discrete graphics card or a network adapter can be installed in the appropriate Peripheral Component Interconnect (PCI)/PCI Express (PCIe) card slot. If such a card is installed, use the connectors on the card instead of the corresponding connectors on the computer to optimize the performance. Depending on your computer model, the preinstalled cards might vary. One or more graphics cards might be installed to provide the following connectors:

- Digital Visual Interface (DVI) connector
- DisplayPort® connector
- Mini DisplayPort® connector

DisplayPort connector

Use this connector to attach a high-performance monitor, a direct-drive monitor, or other compatible devices.

DVI monitor connector

Use this connector to attach a DVI monitor or other compatible devices.

Mini DisplayPort connector

Use this connector to attach a high-performance monitor, a direct-drive monitor, or other compatible devices. The Mini DisplayPort connector is a miniaturized version of a DisplayPort connector.

1 PS/2 mouse connector

Use this connector to attach a Personal System/2 (PS/2) mouse, a trackball, or other pointing devices.

2 PS/2 keyboard connector

Use this connector to attach a PS/2 keyboard.

3 Optional serial connector

Use this connector to attach an external modem, a serial printer, or other devices that use a 9-pin serial connector.

4 Ethernet connector

Connect an Ethernet cable for a local area network (LAN).

Note: To operate the computer within Federal Communications Commission (FCC) Class B limits, use a Category 5 Ethernet cable.

5 USB 3.0 connectors (4)

Use this connector to attach a USB-compatible device, such as a USB keyboard, mouse, storage drive, or printer.

6 USB 2.0 connectors (2)

Use this connector to attach a USB-compatible device, such as a USB keyboard, mouse, storage drive, or printer.

7 Microphone connector

Use this connector to attach a microphone to your computer when you want to record sound or if you use speech-recognition software.

8 Audio line-out connector

The audio line-out connector is used to send audio signals from the computer to external devices, such as headphones.

9 Audio line-in connector

The audio line-in connector is used to receive audio signals from an external audio device, such as a stereo system. When you attach an external audio device, a cable connection is established between the audio line-out connector of the device and the audio line-in connector of the computer.

10 Power-cord connector

Connect the power cord to your computer for power supply.

11 Security-lock slot

Attach a Kensington-style cable lock to the security-lock slot to secure your computer. For more information, see “Attaching a Kensington-style cable lock” on page 30.

12 Key-nest slots

Install the key holder that comes with the computer-cover-lock key to the key-nest slots.

13 PCI/PCIe card area

To further improve the computer performance, you can install PCI/PCIe cards into this area. Depending on your computer model, the pre-installed cards in this area might vary.

Computer components

Notes:

- Depending on the model, your computer might look slightly different from the illustration.
- To remove the computer cover, see “Preparing your computer and removing the computer cover” on page 59.

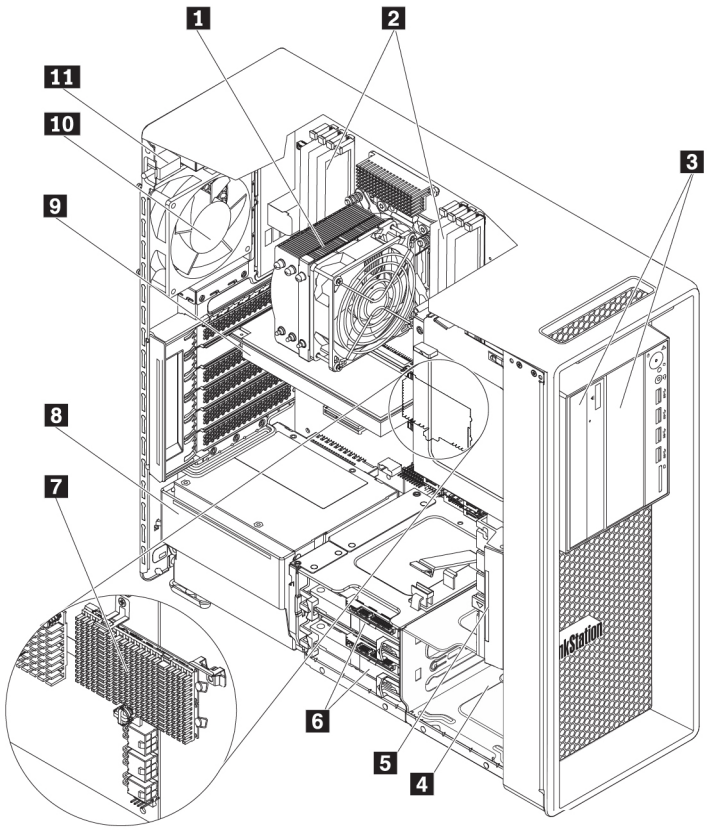

Figure 3. Component locations

1 Heat-sink-and-fan assembly	2 Memory modules*
3 Flex bays*	4 Storage drive cage*
5 Front fan assembly	6 Storage drives*
7 M.2 solid-state drives*	8 Power supply assembly
9 PCI/PCIe card*	10 Rear fan assembly
11 Cover presence switch (also called intrusion switch)	

* Configuration varies by computer models.

Parts on the system board

Note: The system board might look slightly different from the illustration.

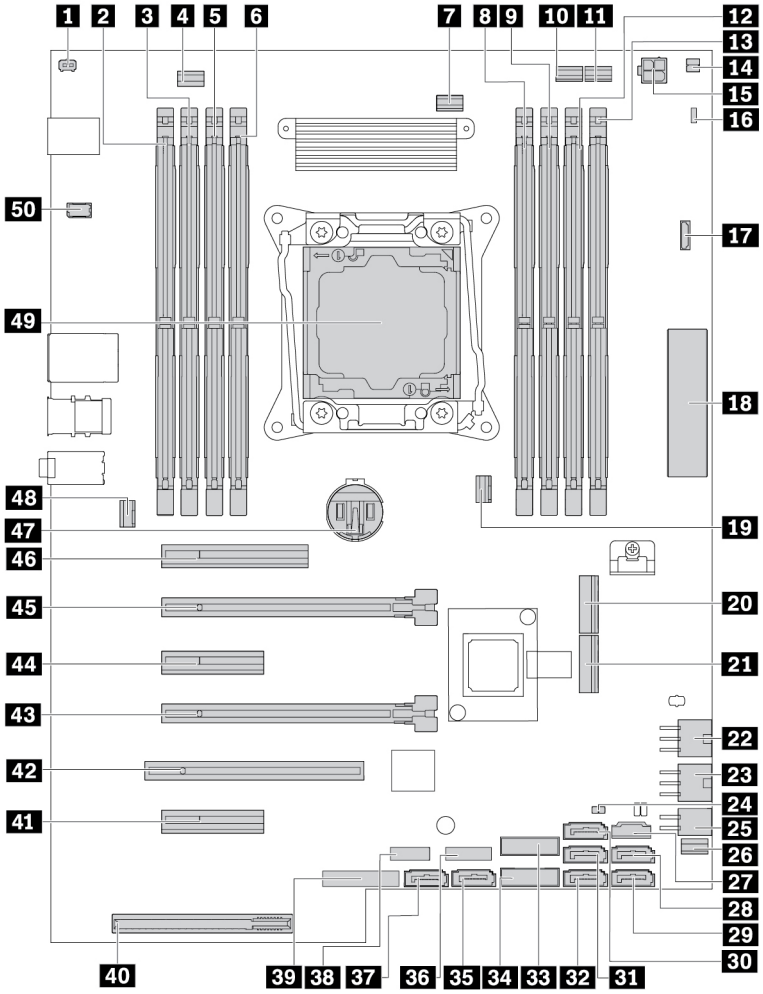

Figure 4. System board part locations

1 Cover presence switch connector (intrusion switch connector)	2 Memory slot
3 Memory slot	4 Rear-fan-assembly connector
5 Memory slot	6 Memory slot
7 Microprocessor fan connector	8 Memory slot
9 Memory slot	10 Optical-drive fan connector 1
11 Optical-drive fan connector 2	12 Memory slot
13 Memory slot	14 Thermal-sensor connector
15 4-pin power connector (for optical drive)	16 Clear CMOS /Recovery jumper
17 VROC connector	18 Front panel input/output (FPIO) connector

19 Memory fan connector 1	20 M.2 solid-state drive slot 2
21 M.2 solid-state drive slot 1	22 6-pin power connector (for graphics card)
23 6-pin power connector (for graphics card)	24 Internal-storage-drive activity indicator connector
25 4-pin power connector (for storage drive)	26 Front-fan-assembly connector
27 Thunderbolt™ control connector	28 SATA 2 connector
29 SATA 3 connector	30 SATA 6 connector
31 SATA 1 connector	32 SATA 4 connector
33 Internal USB 3.0 connector 2	34 Internal USB 3.0 connector 1
35 SATA 5 connector	36 Four-digit-diagnostics display connector
37 eSATA/SATA 7 connector	38 Internal USB 2.0 connector
39 Trusted cryptography module (TCM) connector	40 Power supply connector
41 PCIe 3.0 x4 card slot	42 PCI card slot
43 PCIe 3.0 x16 card slot	44 PCIe 3.0 x4 card slot
45 PCIe 3.0 x16 card slot	46 PCIe 3.0 x8 card slot
47 Coin-cell battery	48 Memory fan connector 2
49 Microprocessor	50 Serial port (COM) connector

Internal storage drives

Internal storage drives are devices that your computer uses to read and store data. You can add drives to your computer to increase storage capacity and enable your computer to read other types of media. Internal storage drives are installed in bays.

When you remove or install an internal storage drive, note the type and size of the drive that each bay supports and correctly connect the required cables. Refer to the appropriate section in Chapter 7 “Hardware removal and installation” on page 59 for instructions on how to remove or install internal storage drives for your computer.

The following illustration shows the locations of the storage drive bays.

Note: The computer hardware might look slightly different from the illustration.

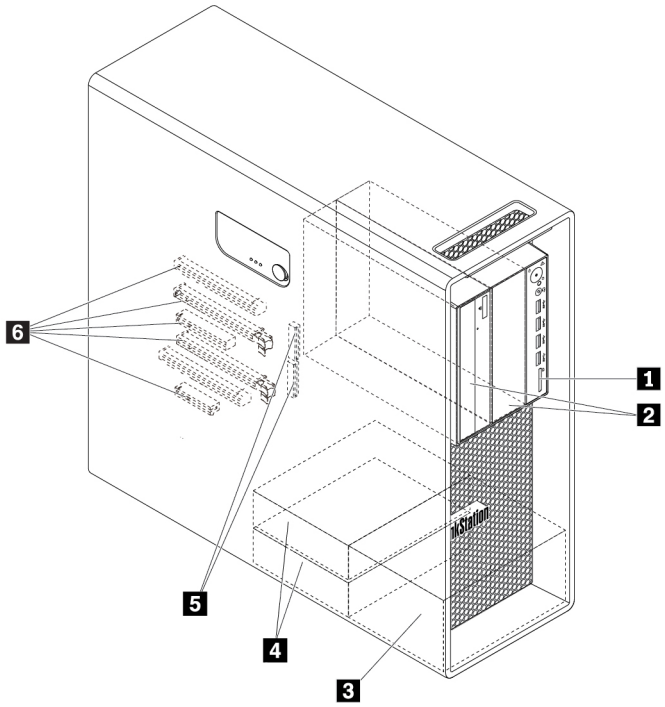

Figure 5. Storage drive bay locations

1 Card reader (for an SD card)	2 Flex bays (2)
3 Storage drive bays (2) (available on some models)	4 Storage drive bays (2)
5 M.2 solid-state drive slots (2)	6 PCIe slots (5)

1 Card reader

An SD card is installed in some models.

2 Flex bays (2)

Depending on your computer model, the following devices might be installed in the flex bays:

- Flex module

  Depending on your computer model, the following parts might be installed in the flex module:

  - 15-in-1 card reader
  - External Serial Advanced Technology Attachment (eSATA) connector
  - Four-digit diagnostic display
  - Institute of Electrical and Electronics Engineers (IEEE) 1394 connector
  - Slim optical drive
  - Thunderbolt adapter kit
- Front-access storage enclosure
- Multi-drive conversion kit

  Depending on your computer model, the following parts might be installed in the multi-drive conversion kit:

  - Storage drive (such as hard disk drive, solid-state drive, or hybrid drive)
  - Slim optical drive
- Optical drive
- Slim-optical-drive adapter

3 Optional-storage-drive bays (2) (available on some models)

You can install hard disk drives, solid-state drives, or hybrid drives in the storage drive bays.

4 Storage drive bays (2)

You can install hard disk drives, solid-state drives, or hybrid drives in the storage drive bays.

5 M.2 solid-state drive slots (2)

One or two M.2 solid-state drives are installed in some models.

6 PCIe slots (5)

You can install compatible PCIe cards and PCIe solid-state drives in the PCIe card slots.

Machine type and model label

The machine type and model label identifies your computer. When you contact Lenovo for help, the machine type and model information helps support technicians to identify your computer and provide faster service.

The following is a sample of the machine type and model label.

Note: The computer hardware might look slightly different from the illustration.

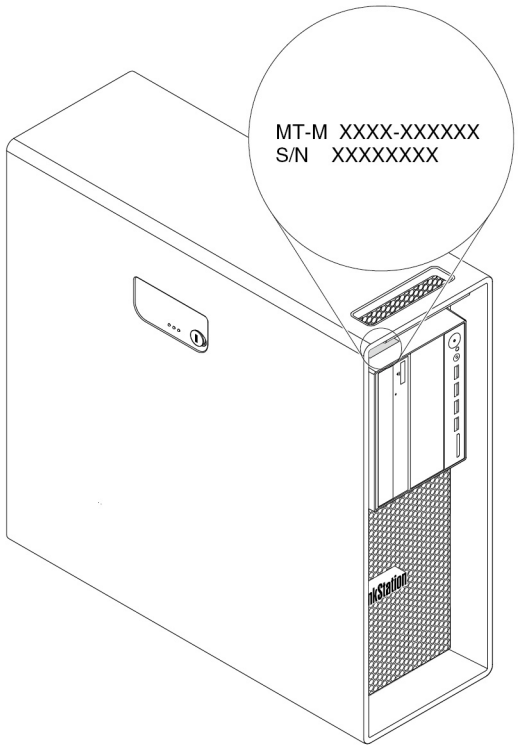

Figure 6. Machine type and model label

Computer features

For your specific computer model, some features might vary or not apply.

Information about your computer

- To view basic information (such as microprocessor and memory information) about your computer, do the following:
  1. Click the Start button to open the Start menu.
  2. Click **Settings → System → About**.
- To view detailed information about the devices (such as the optical drive and network adapters) on your computer, do the following:
  1. Right-click the Start button to open the Start context menu.
  2. Click **Device Manager**.
  3. Locate and double-click your device in **Device Manager** to view device properties. Type the administrator password or provide confirmation if prompted.

Memory

Up to eight double data rate 4 (DDR4) error correction code (ECC) registered dual inline memory modules (RDIMMs)

Storage drives

Your computer supports the following storage drives:

- Hard disk drive
- Hybrid drive (available on some models)
- M.2 solid-state drive (available on some models)
- Optical drive (available on some models)
- SD card (available on some models)
- Solid-state drive (available on some models)
- Intel® Optane™ Memory (available on some models)

To view the amount of storage drive space, do the following:

1. Right-click the Start button to open the Start context menu.
2. Click **Disk Management** and follow the instructions on the screen.

Video features

- PCIe 3.0 x16 card slots on the system board for a discrete graphics card
- Video connectors on a discrete graphics card:
  - DVI connector (available on some models)
  - DisplayPort connector (available on some models)
  - Mini DisplayPort connector (available on some models)

Audio features

Integrated audio controller supports the following connectors and devices on your computer:

- Audio line-in connector
- Audio line-out connector
- Headset connector
- Internal speaker
- Microphone connector

Input/Output (I/O) features

- 100/1000 Mbps Ethernet connector
- Audio connectors (audio line-in connector, audio line-out connector, microphone connector, and headset connector)
- Display connectors (DisplayPort connector, DVI connector, and Mini DisplayPort connector) (vary by graphics card)
- Optional 9-pin serial connector
- PS/2 keyboard connector
- PS/2 mouse connector
- USB connectors

Expansion

- Flex bays
- Storage drive bays
- M.2 solid-state drive slots
- Memory slots
- One PCI card slot
- Two PCIe 3.0 x4 card slot
- One PCIe 3.0 x8 card slot
- Two PCIe 3.0 x16 card slots
- SD card slot

Power supply

Your computer comes with the following power supply: 690-watt automatic voltage-sensing power supply

Wireless features

Depending on your computer model, the following wireless features are supported:

- Wireless LAN
- Bluetooth

System management features

- Ability to store power-on self-test (POST) hardware test results
- Desktop Management Interface (DMI)

  Desktop Management Interface provides a common path for users to access information about all aspects of a computer. The information includes the processor type, installation date, attached printers and other peripherals, power sources, and maintenance history.
- ErP LPS compliance mode

  The energy-related products directive (ErP) lowest power state (LPS) compliance mode reduces the consumption of electricity when your computer is in sleep or off mode. For more information, see “Enabling or disabling the ErP LPS compliance mode” on page 36.
- Intel® Standard Manageability (ISM)

  Intel Standard Manageability builds certain functionalities into computer hardware and firmware. Therefore, computers are less expensive for businesses and easier to monitor, maintain, update, upgrade, and repair.
- Intel Active Management Technology (Intel AMT)

  With specific Intel platform capabilities and third-party management and security applications, Intel Active Management Technology enables IT administrators or managed service providers to easily and remotely discover, repair, and protect their networked computing assets.
- Intel Rapid Storage Technology enterprise (Intel RSTe)

  The Intel RSTe configuration utility enables you to configure Redundant Array of Independent Disks (RAID) for computers with specific Intel chipset system boards. It supports RAID levels 0, 1, 5, and 10 on computers installed with Serial Advanced Technology Attachment (SATA) devices.
- Preboot Execution Environment (PXE)

  Preboot Execution Environment enables you to start computers using a network interface. This manner is independent of starting computers from data storage devices (such as the hard disk drive) or installed operating systems.

- System Management (SM) basic input/output system (BIOS) and SM software

  The SMBIOS specification defines data structures and access methods in a BIOS. Therefore, a user or an application can store and retrieve information specific about the computer in question.
- Wake on LAN (WOL)

  Wake on LAN is an Ethernet computer networking standard that allows a computer to be turned on or woken up by a network message. The message is usually sent by a program running on another computer on the same local area network.
- Windows Management Instrumentation (WMI)

  Windows Management Instrumentation is a set of extensions to the Windows Driver Model. It provides an operating system interface through which instrumented components provide information and notification.

Security features

- Ability to enable and disable a device
- Ability to enable and disable USB connectors individually
- Antivirus program
- BIOS passwords and Windows accounts to deter unauthorized use of your computer
- Computrace Agent software embedded in firmware
- Cover presence switch (also called intrusion switch)
- Finger authentication (available on some models)
- Firewalls
- Intel BIOS guard
- Smart USB Protection function
- Startup sequence control
- Startup without a keyboard or mouse
- Support for a key lock on the computer cover (available on some models)
- Support for a Kensington-style cable lock
- Trusted Platform Module (TPM)

Preinstalled operating system

Your computer is preinstalled with the Windows 10 operating system. Additional operating systems might be identified by Lenovo as compatible with your computer. To determine if an operating system has been certified or tested for compatibility, check the Web site of the operating system provider.

Computer specifications

This section lists the physical specifications for your computer.

Dimensions

- Width: 165 mm (6.50 inches)
- Height: 440 mm (17.32 inches)
- Depth: 460 mm (18.11 inches)

Weight

Maximum configuration as shipped: 24 kg (52.91 lb)

Environment

- Air temperature:

  Operating: From 10°C (50°F) to 35°C (95°F)

  Storage in original shipping package: From -40°C (-40°F) to 60°C (140°F)

  Storage without package: From -10°C (14°F) to 60°C (140°F)
- Humidity:

  Operating: 10%–80% (non-condensing)

  Storage: 10%–90% (non-condensing)
- Altitude:

  Operating: From -15.2 m (-50 ft) to 3048 m (10 000 ft)

  Storage: From -15.2 m (-50 ft) to 10 668 m (35 000 ft)

Electrical input

- Input voltage: From 100 V ac to 240 V ac
- Input frequency: 50/60 Hz

Programs

This section provides information about the programs on your computer.

Accessing a program on your computer

To access a program on your computer, do one of the following:

- From Windows Search:
  1. Type the program name into the search box next to the Start button.
  2. In the search results, click the name of the desired program to launch the program.
- From the Start menu or Control Panel:
  1. Click the Start button to open the Start menu. Then, click the name of the desired program to launch the program.
  2. If the program name is not displayed on the Start menu, access the program from Control Panel.
     a. Click the Start button to open the Start menu.
     b. Click **Windows System → Control Panel**.
     c. View Control Panel by Large icons or Small icons, and then click the name of the desired program to launch the program.

An introduction to Lenovo programs

This section provides information about the major Lenovo programs available on your operating system.

Note: Depending on your computer model, some of the following programs might not be available.

- **Lenovo Vantage**

  Your computer's best features and capabilities should be easy to access and understand. With Lenovo Vantage, they are.

  Use Lenovo Vantage to do the following:

  - Know the device status easily and customize device settings.
  - Download and install UEFI BIOS, firmware, and driver updates to keep your computer up-to-date.
  - Monitor your computer health, and secure your computer against outside threats.
  - Look up warranty status (online).
  - Access *User Guide* and helpful articles.

  Notes:

  - The available features vary depending on the computer model.
  - Lenovo Vantage makes periodic updates of the features to keep improving your experience with your computer. The description of features might be different from that on your actual user interface.

- **ThinkStation Diagnostics**

  The ThinkStation Diagnostics program enables you to troubleshoot and resolve computer problems. The program notifies you of any issues detected by the real-time hardware diagnostic monitoring function. The program also provides the details of the issue, analyzes possible causes, and provides solutions.

Chapter 2. Using your computer

This chapter provides information to help you use the various features provided by your computer.

Registering your computer

When you register your computer with Lenovo, you enter required information into a Lenovo database. The information enables Lenovo to contact you when there is a recall or other severe problem and provide quicker service when you call Lenovo for help. In addition, some locations offer extended privileges and services to registered users.

To register your computer with Lenovo, go to https://support.lenovo.com/productregistration and follow the instructions on the screen.

Setting the computer volume

To set the computer volume, do the following:

1. Click the volume icon in the Windows notification area on the taskbar.

   Note: If the volume icon is not displayed in the Windows notification area, add the icon to the notification area. See the Windows help system.
2. Follow the instructions on the screen and the hover text to adjust the volume, mute the speaker, or unmute the speaker.

Using a disc

This section provides instructions on how to use a disc and the optical drive.

Guidelines about using the optical drive

When using the optical drive, follow these guidelines:

- Do not place the computer in a location where the drive is exposed to any of the following conditions:
  - High temperature
  - High humidity
  - Excessive dust
  - Excessive vibration or sudden shock
  - An inclined surface
  - Direct sunlight
- Do not insert any object other than a disc into the drive.
- Do not insert damaged discs into the drive. Warped, scratched, or dirty discs can damage the drive.
- Before moving the computer, remove the disc from the drive.

Handling and storing a disc

When handling and storing a disc, follow these guidelines:

- Hold the disc by its edges. Do not touch the surface of the side that is not labeled.

© Copyright Lenovo 2018, 2020

- To remove dust or fingerprints, wipe the disc with a clean, soft cloth from the center to the outside. Wiping the disc in a circular direction might cause loss of data.
- Do not write or stick paper on the disc.
- Do not scratch or mark the disc.
- Do not place or store the disc in direct sunlight.
- Do not use benzene, thinners, or other cleaners to clean the disc.
- Do not drop or bend the disc.

Playing and removing a disc

To play a disc, do the following:

1. With the computer on, press the eject/close button on the front of the optical drive. The tray slides out of the drive.
2. Insert a disc into the tray. Some optical drive has a snap hub in the center of the tray. If your drive has a snap hub, support the tray with one hand and then push the center of the disc until it snaps into place.
3. Press the eject/close button again or gently push the tray forward to close the tray. The disc player program starts automatically. For more information, refer to the help system of the disc player program.

To remove a disc from the optical drive, do the following:

1. With the computer on, press the eject/close button on the front of the optical drive. The tray slides out of the drive.
2. Carefully remove the disc from the tray.
3. Press the eject/close button again or gently push the tray forward to close the tray.

Note: If the tray does not slide out of the drive when you press the eject/close button, turn off your computer. Then, insert a straightened paper clip into the emergency-eject hole adjacent to the eject/close button. Use the emergency eject only in an emergency.

Recording a disc

If your optical drive supports recording, you can record a disc.

Recording a disc using Windows tools

To record a disc using Windows tools, do one of the following:

- Burn a disc using the AutoPlay window.
    1. Ensure that the disc is played automatically.
        a. Click the Start button to open the Start menu.
        b. Click **Settings → Devices → AutoPlay**.
        c. Select or turn on **Use AutoPlay for all media and devices**.
    2. Insert a recordable disc into the optical drive that supports recording. The AutoPlay window opens.
    3. Follow the instructions on the screen.
- Burn a disc using Windows Media® Player.
    1. Insert a recordable disc into the optical drive that supports recording.
    2. Open Windows Media Player. See “Accessing a program on your computer” on page 16.
    3. Follow the instructions on the screen.
- Burn a disc from an ISO file.

1. Insert a recordable disc into the optical drive that supports recording.
2. Double-click the ISO file.
3. Follow the instructions on the screen.

Recording a disc using preinstalled programs

To record a disc using preinstalled programs, do the following:

1. Insert a recordable disc into the optical drive that supports recording.
2. Open the PowerDVD Create, PowerProducer, or Power2Go program. See “Accessing a program on your computer” on page 16.
3. Follow the instructions on the screen.

Connecting to a network

This section provides instructions on how to connect to a network.

Connecting to an Ethernet LAN

You can connect your computer to an Ethernet LAN by connecting an Ethernet cable to the Ethernet connector.

DANGER

To avoid the risk of electrical shock, do not connect the telephone cable to the Ethernet connector.

Connecting to a wireless LAN

You can connect your computer to a wireless LAN without the use of an Ethernet cable but by means of radio waves only.

Note: The wireless LAN feature is available only on some models.

To establish a wireless-LAN connection, do the following:

1. Ensure that a wireless LAN is available and the wireless LAN feature on your computer is working.
2. Click the wireless-network-connection-status icon in the Windows notification area to display available wireless networks.

   Note: If the wireless-network-connection-status icon is not displayed in the Windows notification area, add the icon to the notification area. See the Windows help system.
3. Click a wireless LAN, and then click **Connect** to connect your computer to it. Provide required information if needed.

Connecting to a Bluetooth-enabled device

Bluetooth is a short-range wireless communications technology. Use Bluetooth to establish a wireless connection between your computer and another Bluetooth-enabled device within a distance of about 10 m (32.8 ft).

Note: The Bluetooth feature is available only on some models.

To connect to a Bluetooth-enabled device, do the following:

1. Turn on the Bluetooth feature of your computer. Ensure that the Bluetooth-enabled device is located within a distance of about 10 m (32.8 ft) from your computer.

2. Click the Bluetooth icon in the Windows notification area on the taskbar. Then, click **Add a Device** and follow the instructions on the screen.

   Note: If the Bluetooth icon is not displayed in the Windows notification area, add the icon to the notification area. See the Windows help system.

Chapter 3. You and your computer

This chapter provides information about accessibility, ergonomic, and cleaning and maintenance.

Arranging your workspace

Arrange your workspace to suit your needs and the kind of work you do. This section provides information about the factors that affect the way you arrange your workspace.

Glare and lighting

Position the monitor to minimize glare and reflections from overhead lights, windows, and other light sources. Reflected light from shiny surfaces can cause annoying reflections on your screen. When possible, place the monitor at right angles to windows and other light sources. If necessary, reduce overhead lighting by turning off lights or using lower wattage bulbs. If you install the monitor near a window, use curtains or blinds to block the sunlight. You can adjust the brightness and contrast controls on the monitor as the room lighting changes throughout the day.

Where it is impossible to avoid reflections or to adjust the lighting, an antiglare filter placed over the screen might be helpful. However, these filters might affect the clarity of the image on the screen; try them only after you have exhausted other methods of reducing glare.

Air circulation

Your computer produces heat. The computer has a fan that pulls in fresh air and forces out hot air through the air vents. Blocking the air vents can cause overheating, which might result in a malfunction or damage. Position the computer so that nothing blocks the air vents; usually, 51 mm (2 inches) of air space is sufficient. Ensure that the vented air is not blowing on people.

Electrical outlet locations and cable lengths

The following factors might determine the final placement of your computer:

- Locations of electrical outlets
- Length of power cords or power adapters
- Length of the cables that are connected to other devices

For more information about power cords or power adapters, see “Power cords and power adapters” on page iv.

Comfort

Although no single working position is ideal for everyone, here are a few guidelines to help you find a position that suits you best. The following figure sets an example for your reference.

© Copyright Lenovo 2018, 2020



- Screen position: Keep the screen at a comfortable viewing distance, usually 51–61 cm (20–24 inches). Then, adjust the screen so that the top of the screen is at or slightly below eye level and you can view it without twisting your body.
- Chair position: Use a chair that gives you good back support and seat height adjustment. Use chair adjustments to best suit your desired posture.
- Head position: Keep your head and neck in a comfortable and neutral (vertical or upright) position.
- Arm and hand positions: Keep your forearms, wrists, and hands in a relaxed and neutral (horizontal) position. Type with a soft touch without pounding the keys.
- Leg position: Keep your thighs parallel to the floor and your feet flat on the floor or on a footrest.

Make minor modifications in your working posture to deter the onset of discomfort caused by long periods of working in the same position. Frequent short breaks from your work also help to prevent minor discomfort associated with your working posture.

Accessibility information

Lenovo is committed to providing users who have hearing, vision, and mobility limitations with greater access to information and technology. This section provides information about the ways these users can get the most out of their computer experience. You also can get the most up-to-date accessibility information from the following Web site:
https://www.lenovo.com/accessibility

Keyboard shortcuts

The following list contains keyboard shortcuts that can help make your computer easier to use.

Note: Depending on your keyboard, some of the following keyboard shortcuts might not be available.

- **Windows logo key + U**: Open Ease of Access Center
- **Right Shift for eight seconds**: Turn on or turn off Filter Keys
- **Shift five times**: Turn on or turn off Sticky Keys
- **Num Lock for five seconds**: Turn on or turn off Toggle Keys
- **Left Alt+Left Shift+Num Lock**: Turn on or turn off Mouse Keys
- **Left Alt+Left Shift+PrtScn (or PrtSc)**: Turn on or turn off High Contrast

For more information, go to https://windows.microsoft.com/, and then search using any of the following keywords: `keyboard shortcuts`, `key combinations`, `shortcut keys`.

Ease of Access Center

Ease of Access Center on the Windows operating system enables you to configure your computer to suit your physical and cognitive needs.

To use Ease of Access Center, do the following:

1. Click the Start button to open the Start menu.
2. Click **Settings → Ease of Access**.
3. Choose the appropriate tool by following the instructions on the screen.

Ease of Access Center mainly includes the following tools:

- Magnifier

  Magnifier is a useful utility that enlarges the entire screen or part of the screen so that you can see the items better.
- Narrator

  Narrator is a screen reader that reads aloud what is displayed on the screen and describes events such as error messages.
- On-Screen Keyboard

  To input data into your computer using a mouse, joystick, or other pointing devices instead of a physical keyboard, you can use On-Screen Keyboard.
- High Contrast

  High Contrast is a feature that heightens the color contrast of some text and images on your screen. As a result, those items are more distinct and easier to identify.
- Personalized keyboard

  Adjust keyboard settings to make your keyboard easier to use. For example, you can use your keyboard to control the pointer and type certain key combinations easier.
- Personalized mouse

  Adjust mouse settings to make your mouse easier to use. For example, you can change the pointer appearance and make it easier to manage windows with the mouse.

Speech Recognition

Speech Recognition enables you to control your computer by voice.

Using only your voice, you can start programs, open menus, click objects on the screen, dictate text into documents, and write and send e-mails. Everything you do with the keyboard and mouse can be done with only your voice.

To use Speech Recognition, do the following:

1. Click the Start button to open the Start menu.
2. Click **Windows System → Control Panel**.
3. View Control Panel by Large icons or Small icons, and then click **Speech Recognition**.
4. Follow the instructions on the screen.

Screen-reader technologies

Screen-reader technologies are primarily focused on software program interfaces, help information systems, and various online documents. For additional information about screen readers, see the following:

- Using PDFs with screen readers:
  https://www.adobe.com/accessibility.html?promoid=DJGVE
- Using the JAWS screen reader:
  https://www.freedomscientific.com/Products/Blindness/JAWS
- Using the NVDA screen reader:

https://www.nvaccess.org/

Screen resolution

You can make the text and images on your screen easier to read by adjusting the screen resolution of your computer.

To adjust the screen resolution, do the following:

1. Right-click a blank area on the desktop.
2. Click **Display settings → Display**.
3. Follow the instructions on the screen.

Note: Setting the resolution too low might prevent some items from fitting on the screen.

Customizable item size

You can make the items on your screen easier to read by changing the item size.

- To change the item size temporarily, use the Magnifier tool in Ease of Access Center.
- To change the item size permanently, do the following:
  - Change the size of all the items on your screen. Do the following:
    1. Right-click a blank area on the desktop.
    2. Click **Display settings → Display**.
    3. Follow the on-screen instructions to change the item size. For some applications, your configuration might not take effect until you sign out and then sign in again.
  - Change the size of the items on a Web page.

    Press and hold Ctrl, and then press the plus-sign key (+) to enlarge or the minus-sign key (-) to reduce the text size.
  - Change the size of the items on the desktop or a window.

    Note: This function might not work on some windows.

    If your mouse has a wheel, press and hold Ctrl, and then scroll the wheel to change the item size.

Industry-standard connectors

Your computer provides industry-standard connectors that enable you to connect assistive devices.

For more information about the location and function of each connector, see “Hardware locations” on page 1.

TTY/TDD conversion modem

Your computer supports the use of a text telephone (TTY) or the telecommunications device for the deaf (TDD) conversion modem. The modem must be connected between your computer and a TTY/TDD telephone. Then, you can type a message on your computer and send it to the telephone.

Documentation in accessible formats

Lenovo provides electronic documentation in accessible formats, such as properly tagged PDF files or HyperText Markup Language (HTML) files. Lenovo electronic documentation is developed to ensure that visually impaired users can read the documentation through a screen reader. Each image in the documentation also includes adequate alternative text so that visually impaired users can understand the image when they use a screen reader.

Cleaning your computer

Attention: Do not open your computer or attempt any repair before reading and understanding the “Read this first: Important safety information” on page iii. Properly remove or install your computer cover. See Chapter 7 “Hardware removal and installation” on page 59.

CAUTION:
Remove any media from the drives and turn off all connected devices and the computer. Then, disconnect all power cords from electrical outlets and disconnect all cables that are connected to the computer.

It is a good practice to clean your computer periodically to protect the surfaces and ensure trouble-free operation. Use only mild cleaning solutions and a damp cloth to clean the painted surfaces of the computer.

Dust buildup compounds problems associated with glare, so remember to clean the screen periodically. Wipe the screen surface gently with a soft, dry cloth, or blow on the screen to remove grit and other loose particles. Depending on the type of the screen, moisten a soft, lint-free cloth with an LCD cleaner or liquid glass cleaner and then wipe the screen surface.

Maintenance

With appropriate care and maintenance, your computer will serve you reliably. This section provides instructions on how to maintain your computer so that it can keep working in better condition.

Basic maintenance tips

Here are some basic points about keeping your computer functioning properly:

- Keep your computer in a clean, dry environment. Ensure that the computer rests on a flat, steady surface.
- Do not cover any of air vents. These air vents provide airflow to keep your computer from overheating.
- Keep food and drinks away from all parts of your computer. Food particles and spills might make the keyboard and mouse stick and unusable.
- Do not get the power switches or other controls wet. Moisture can damage these parts and cause an electrical hazard.
- Always disconnect a power cord by grasping the plug instead of the cord.

Good maintenance practices

By performing a few good maintenance practices, you can maintain good computer performance, protect your data, and be prepared in case of a computer failure.

- Empty your recycle bin on a regular basis.
- Use the disk defragmentation or disk optimization feature of your operating system occasionally to prevent performance problems caused by an excessive number of fragmented files.
- Clean out your Inbox, Sent Items, and Deleted Items folders in your e-mail application on a regular basis.
- Back up critical data regularly on removable media memory, such as discs and USB storage devices, and store the removable media in a safe location. The frequency of making backup copies depends on how critical the data is to you or your business.
- Back up your data on the storage drive regularly. See “Recovery information” on page 58.
- Keep your computer software, device drivers, and operating system up-to-date. See “Keeping your computer current” on page 28.

- Keep a log book. Entries might include major software or hardware changes, device-driver updates, intermittent problems and what you did to resolve them, and other issues you might have experienced. The cause of a problem might be change in hardware, change in software, or any other actions that might have taken place. A log book can help you or a Lenovo technician determines the cause of a problem.
- Create Product Recovery discs. See “Recovery information” on page 58 for more information about using Product Recovery discs to restore the hard disk drive to the factory-default settings.

Keeping your computer current

In most cases, it is a good practice to have the most up-to-date operating system update patches, software programs, and device drivers. This section provides instructions on how to get the latest updates for your computer.

Getting the latest system updates

To get the latest system updates for your computer, ensure that your computer is connected to the Internet and do one of the following:

- Open Lenovo Vantage to check the available update packages. If the latest update package is available, follow the on-screen instructions to download and install the package.

  To open the Lenovo Vantage program, see “Accessing a program on your computer” on page 16.
- Use Windows Update to get the system updates, such as security fixes, new versions of Windows components, and device driver updates.
  1. Click the Start button to open the Start menu.
  2. Click **Settings → Update & Security → Windows Update**.
  3. Follow the instructions on the screen.

Note: The device drivers provided by Windows Update might not be tested by Lenovo. It is recommended that you get device drivers by using Lenovo programs or from the Lenovo Web site at https://support.lenovo.com.

Moving your computer

Before moving your computer, take the following precautions:

1. Back up your data on the storage drive. See “Good maintenance practices” on page 27.
2. Remove any media from the drives and turn off all connected devices and the computer. Then, disconnect all power cords from electrical outlets and disconnect all cables that are connected to the computer.
3. If you saved the original shipping cartons and packing materials, use them to pack the units. If you are using different cartons, cushion the units to avoid damage.

Moving your computer to another country or region

When you move your computer to another country or region, you must take local electrical standards into consideration. If the local electrical outlet style is different from the type you are using, use either an electrical plug adapter or a new power cord. To purchase such items, contact the Lenovo Customer Support Center. For a list of Lenovo Support phone numbers, go to https://pcsupport.lenovo.com/supportphonelist. If you cannot find the support telephone number for your country or region, contact your Lenovo reseller.

Chapter 4. Security

This chapter provides information about how to protect your computer from unauthorized use.

Locking your computer

This section provides instructions on how to lock your computer with the locking devices to keep your computer safe.

Locking the computer cover

Locking the computer cover helps prevent unauthorized people from gaining access to the inside of your computer. Your computer might come with a key lock that is built into the computer cover. The keys for the key lock are attached to the rear of the machine. For security, store the keys in a secure place when you are not using them. Lenovo does not accept responsibility for any loss of keys.

Note: The key lock and keys are available only on some models.

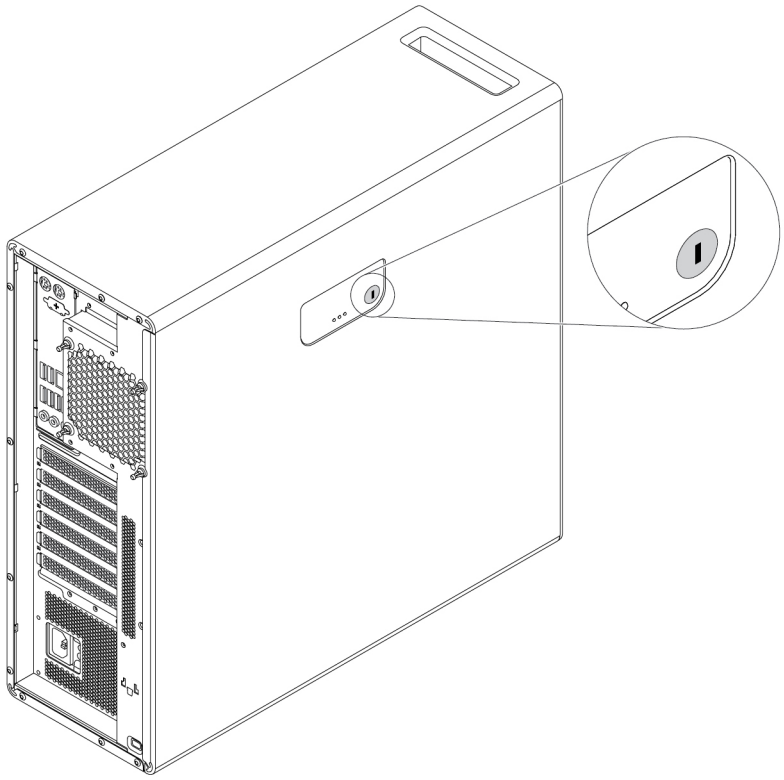

Figure 7. Key lock

© Copyright Lenovo 2018, 2020

Attaching a Kensington-style cable lock

You can use a Kensington-style cable lock to secure your computer to a desk, table, or other non-permanent fixture. The cable lock attaches to the security-lock slot at the rear of your computer. Depending on the type selected, the cable lock can be operated with a key or combination. You can order such a cable lock directly from Lenovo by searching for *Kensington* at:
http://www.lenovo.com/support

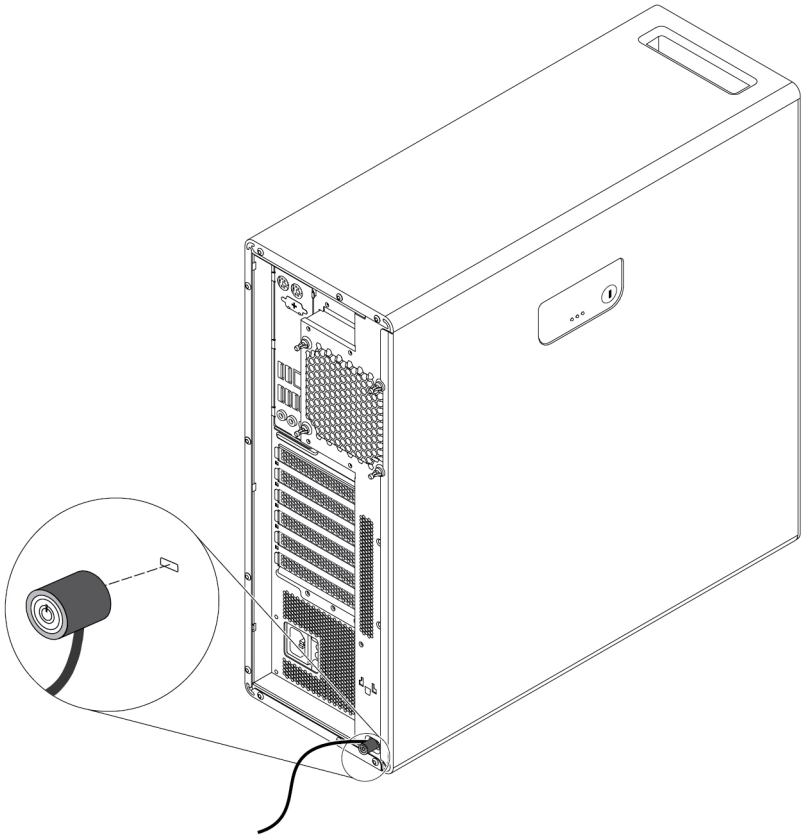

Figure 8. Kensington-style cable lock

Viewing and changing security settings in the Setup Utility program

To view and change security settings in the Setup Utility program, do the following:

1. Start the Setup Utility program. See “Starting the Setup Utility program” on page 35.
2. Select **Security**.
3. Follow the instructions on the right side of the screen to view and change security settings. You can refer to “Using the Setup Utility program” on page 35 to get basic information about some major security settings.
4. To save settings and exit the Setup Utility program, press F10 or Fn+F10 (depending on the keyboard settings). Then, select **Yes** in the window displayed, and press Enter.

Using passwords and Windows accounts

You can use BIOS passwords and Windows accounts to prevent unauthorized access to your computer and data. To use the BIOS passwords or the Windows accounts, do the following:

- To use BIOS passwords, see “Using BIOS passwords” on page 37.
- To use Windows accounts, do the following:
  1. Click the Start button to open the Start menu.
  2. Click **Settings → Accounts**.
  3. Follow the instructions on the screen.

Using fingerprint authentication

If your keyboard has a fingerprint reader, you can use fingerprint authentication to replace passwords for simple and secure user access. To use fingerprint authentication, first enroll your fingerprints and associate them with your passwords (such as the power-on password, hard disk password, and Windows password). Use the fingerprint reader and the fingerprint program to complete this procedure.

To use fingerprint authentication, use the fingerprint tool provided by the Windows 10 operating system. Click the Start button to open the Start menu, and then click **Settings → Accounts → Sign-in options**. Follow the instructions on the screen.

To use the fingerprint reader, refer to the documentation shipped with the fingerprint keyboard or located on the Lenovo Support Web site at https://pcsupport.lenovo.com/solutions/pd014444.

Using the cover presence switch

The cover presence switch prevents your computer from logging in to the operating system when the computer cover is not properly installed or closed.

To use the cover presence switch, enable the cover-presence-switch connector on the system board first. To achieve this, do the following:

1. Start the Setup Utility program. See “Starting the Setup Utility program” on page 35.
2. Select **Security → Chassis Intrusion Detection** and press Enter.
3. Select **Enabled** and press Enter.
4. To save settings and exit the Setup Utility program, press F10 or Fn+F10 (depending on the keyboard settings), select **Yes** in the window displayed, and press Enter. The cover-presence-switch connector on the system board is enabled.

The cover presence switch starts functioning. If the switch detects that the computer cover is not correctly installed or closed, an error message is displayed when you turn on the computer. To fix the error and log in to the operating system, do the following:

1. Properly remove or install your computer cover. See Chapter 7 “Hardware removal and installation” on page 59.
2. Start and then exit the Setup Utility program. See “Starting the Setup Utility program” on page 35 and “Exiting the Setup Utility program” on page 40.

Using firewalls

A firewall can be hardware, software, or a combination of both depending on the level of security required. Firewalls work on a set of rules to determine which inbound and outbound connections are authorized. If your computer is preinstalled with a firewall program, it helps protect against computer Internet security threats, unauthorized access, intrusions, and Internet attacks. It also protects your privacy. For more information about how to use the firewall program, refer to the help system of your firewall program.

To use Windows Firewall, do the following:

1. Click the Start button to open the Start menu.
2. Click **Windows System → Control Panel**.
3. View Control Panel by Large icons or Small icons, and then click **Windows Defender Firewall**.
4. Follow the instructions on the screen.

Protecting data against viruses

Your computer is preinstalled with an antivirus program to help you guard against, detect, and eliminate viruses.

Lenovo provides a full version of antivirus software on your computer with a free 30-day subscription. After 30 days, you must renew the license to continue receiving the antivirus software updates.

Note: Virus definition files must be kept up-to-date to guard against new viruses.

For more information about how to use your antivirus software, refer to the help system of your antivirus software.

Using the Smart USB Protection function

The Smart USB Protection function is a security function that helps prevent data from being copied from the computer to USB storage devices connected to the computer. You can set the Smart USB Protection function to one of the following modes:

- **Disabled** (default setting): You can use the USB storage devices without limitation.
- **Read Only**: You cannot copy data from the computer to the USB storage devices. However, you can access or modify data on the USB storage devices.
- **No Access**: You cannot access the USB storage devices from the computer.

To configure the Smart USB Protection function, do the following:

1. Start the Setup Utility program. See “Starting the Setup Utility program” on page 35.
2. Select **Security → Smart USB Protection** and press Enter.
3. Select the desired setting and press Enter.
4. To save settings and exit the Setup Utility program, press F10 or Fn+F10 (depending on the keyboard settings). Then, select **Yes** in the window displayed, and press Enter.

Computrace Agent software embedded in firmware (for selected models)

The Computrace Agent software is an IT asset management and computer theft recovery solution. The software detects if changes have been made on the computer, such as hardware, software, or the computer call-in location. You might have to purchase a subscription to activate the Computrace Agent software.

Trusted Platform Module (TPM)

TPM is a secure cryptoprocessor that stores cryptographic keys, which in turn protects information stored in your computer.

Intel BIOS guard

The BIOS guard module cryptographically verifies all the BIOS updates to the system BIOS flash. Therefore, the malware is blocked from attacking the BIOS.

Chapter 5. Advanced configuration

This chapter provides information to help you further configure the computer.

Using the Setup Utility program

The Setup Utility program is used to view and change the configuration settings of your computer. This section provides information about only the major configuration settings available in the program.

Note: The operating system settings might override any similar settings in the Setup Utility program.

Starting the Setup Utility program

To start the Setup Utility program, do the following:

1. Turn on or restart your computer.
2. Before the operating system starts up, repeatedly press and release F1 or Fn+F1 (depending on the keyboard settings). Based on the Setup Utility display mode setting, one of the following situations occurs:
   - Text mode: The Setup Utility program opens.
   - Graphic mode (available on some models): The start screen is displayed. Then, select **Setup** and press Enter to open the Setup Utility program.

   Note: If a BIOS password has been set, the Setup Utility program will not open until you enter the correct password. For more information, see “Using BIOS passwords” on page 37.

To view and change the configuration settings, follow the instructions on the screen.

Changing the display mode of the Setup Utility program

You can use the Setup Utility program in the graphic mode or the text mode according to your needs.

- Text mode: The keys on the keyboard used to perform various tasks are displayed at the bottom of the screen.

  Note: The Serial Port Console Redirection item is available only in the text mode.
- Graphic mode (available on some models): In addition to the keyboard, you also can use the mouse to make selections.

To change the display mode of the Setup Utility program, do the following:

1. Start the Setup Utility program. See “Starting the Setup Utility program” on page 35.
2. From the main interface, select **Setup mode select** and press Enter.
3. Select **Graphic** or **Text** and press Enter.
4. To save settings and exit the Setup Utility program, press F10 or Fn+F10 (depending on the keyboard settings), select **Yes** in the window displayed, and press Enter.

Changing the display language of the Setup Utility program

The Setup Utility program supports three display languages: English, French, and simplified Chinese.

To change the display language of the Setup Utility program, do the following:

© Copyright Lenovo 2018, 2020

1. Start the Setup Utility program. See “Starting the Setup Utility program” on page 35.
2. From the main interface, locate **System Language** and press Enter.
3. Select the display language according to your needs.

Enabling or disabling a device

This section provides information about how to enable or disable user access to hardware devices (such as USB connectors or storage drives).

To enable or disable a device, do the following:

1. Start the Setup Utility program. See “Starting the Setup Utility program” on page 35.
2. Select **Devices**.
3. Select the device you want to enable or disable and press Enter.
4. Select the desired setting and press Enter.
5. To save settings and exit the Setup Utility program, press F10 or Fn+F10 (depending on the keyboard settings). Then, select **Yes** in the window displayed, and press Enter.

Enabling or disabling the automatic power-on of your computer

The Automatic Power On item in the Setup Utility program provides various options for you to make your computer start up automatically.

To enable or disable the Automatic Power On features, do the following:

1. Start the Setup Utility program. See “Starting the Setup Utility program” on page 35.
2. Select **Power → Automatic Power On** and press Enter.
3. Select the feature you want to enable or disable and press Enter.
4. Select the desired setting and press Enter.
5. To save settings and exit the Setup Utility program, press F10 or Fn+F10 (depending on the keyboard settings). Then, select **Yes** in the window displayed, and press Enter.

Enabling or disabling the ErP LPS compliance mode

Lenovo computers meet the eco-design requirements of the ErP Lot 3 regulation. For more information, go to:
https://www.lenovo.com/ecodeclaration

You can enable the ErP LPS compliance mode in the Setup Utility program to reduce the consumption of electricity when your computer is off or in sleep mode.

To enable or disable the ErP LPS compliance mode, do the following:

1. Start the Setup Utility program. See “Starting the Setup Utility program” on page 35.
2. Select **Power → Enhanced Power Saving Mode** and press Enter.
3. Select **Enabled** or **Disabled** depending on your needs, and then press Enter. If you select **Enabled**, you also need to disable the Wake on LAN feature. See “Enabling or disabling the automatic power-on of your computer” on page 36.
4. To save settings and exit the Setup Utility program, press F10 or Fn+F10 (depending on the keyboard settings). Then, select **Yes** in the window displayed, and press Enter.

When the ErP LPS compliance mode is enabled, you can wake up your computer by doing one of the following:

- Press the power button.
- Enable the Wake Up on Alarm feature to make your computer wake up at a set time. See “Enabling or disabling the automatic power-on of your computer” on page 36.
- Enable the After Power Loss feature to make your computer wake up when the power supply resumes after a sudden loss of electricity.

  To enable the After Power Loss feature, do the following:

  1. Start the Setup Utility program. See “Starting the Setup Utility program” on page 35.
  2. Select **Power → After Power Loss** and press Enter.
  3. Select **Power On** and press Enter.
  4. To save settings and exit the Setup Utility program, press F10 or Fn+F10 (depending on the keyboard settings). Then, select **Yes** in the window displayed, and press Enter.

Enabling or disabling the configuration change detection

With the configuration-change detection enabled, if the POST detects configuration changes of some hardware devices (such as storage drives or memory modules), an error message is displayed.

To enable or disable the configuration change detection, do the following:

1. Start the Setup Utility program. See “Starting the Setup Utility program” on page 35.
2. Select **Security → Configuration Change Detection** and press Enter.
3. Select the desired setting and press Enter.
4. To save settings and exit the Setup Utility program, press F10 or Fn+F10 (depending on the keyboard settings). Then, select **Yes** in the window displayed, and press Enter.

To bypass the error message and log in to the operating system, do one of the following:

- Press F2 or Fn+F2 (depending on the keyboard settings).
- Start and then exit the Setup Utility program. See “Starting the Setup Utility program” on page 35 and “Exiting the Setup Utility program” on page 40.

Changing the BIOS settings before installing a new operating system

BIOS settings vary by operating system. Change the BIOS settings before installing a new operating system.

To change the BIOS settings, do the following:

1. Start the Setup Utility program. See “Starting the Setup Utility program” on page 35.
2. From the main interface, select **Exit → OS Optimized Defaults** and press Enter.
3. Depending on the operating system to be installed, do one of the following:
   - To install the Windows 10 (64-bit) operating system, select **Enabled** and press Enter.
   - To install an operating system other than Windows 10 (64-bit), select **Disabled** and press Enter.
4. Select **Yes** in the window displayed and press Enter to confirm your selection.
5. To save settings and exit the Setup Utility program, press F10 or Fn+F10 (depending on the keyboard settings). Then, select **Yes** in the window displayed, and press Enter.

Using BIOS passwords

By using the Setup Utility program, you can set passwords to prevent unauthorized access to your computer and data.

You do not have to set any passwords to use your computer. However, using passwords improves computer security. If you decide to set any passwords, read the following topics.

Password types

The following types of passwords are available in the Setup Utility program:

- Power-on password

  When a power-on password is set, you are prompted to enter a valid password each time the computer is turned on. The computer cannot be used until the valid password is entered.

- Administrator password

  Setting an administrator password deters unauthorized users from changing configuration settings. If you are responsible for maintaining the configuration settings of several computers, you might want to set an administrator password.

  When an administrator password is set, you are prompted to enter a valid password each time you try to access the Setup Utility program. The Setup Utility program cannot be accessed until a valid password is entered.

  If both the power-on password and administrator password are set, you can enter either password. However, you must use your administrator password to change any configuration settings.

- Hard disk password

  Setting a hard disk password prevents unauthorized access to the data on the internal storage drive (such as a hard disk drive). When a hard disk password is set, you are prompted to enter a valid password each time you try to access the storage drive.

  Notes:

  – Even if the storage drive is removed from one computer and installed in another, the hard-disk password is still valid.

  – If the hard disk password is forgotten, there is no way to reset the password or recover data from the storage drive.

Password considerations

A password can be any combination of up to 64 alphabetic and numeric characters. For security reasons, it is recommended to use a strong password that cannot be easily compromised.

Note: The Setup Utility program passwords are case-sensitive.

To set a strong password, consider the following guidelines:

- Have at least eight characters in length
- Contain at least one alphabetic character and one numeric character
- Not be your name or your user name
- Not be a common word or a common name
- Be significantly different from your previous passwords

Setting, changing, or deleting a password

To set, change, or delete a password, do the following:

1. Start the Setup Utility program. See “Starting the Setup Utility program” on page 35.
2. Select **Security**.
3. Depending on the password type, select **Set Power-On Password**, **Set Administrator Password**, or **Hard Disk Password** and press Enter.

4. Follow the instructions on the right side of the screen to set, change, or delete a password.

   Note: A password can be any combination of up to 64 alphabetic and numeric characters. For more information, see “Password considerations” on page 38.

5. To save settings and exit the Setup Utility program, press F10 or Fn+F10 (depending on the keyboard settings). Then, select **Yes** in the window displayed, and press Enter.

Erasing lost or forgotten passwords (clearing CMOS)

This section provides instructions on how to erase lost or forgotten passwords, such as a user password.

Note: The instructions in this section do not apply to the hard disk password.

To erase a lost or forgotten password, do the following:

1. Remove any media from the drives and turn off all connected devices and the computer. Then, disconnect all power cords from electrical outlets and disconnect all cables that are connected to the computer.
2. Remove the computer cover. See Chapter 7 “Hardware removal and installation” on page 59.
3. Locate the Clear Complementary Metal Oxide Semiconductor (CMOS) /Recovery jumper on the system board. See “Hardware locations” on page 1.
4. Move the jumper from the standard position (pin 1 and pin 2) to the maintenance position (pin 2 and pin 3).
5. Reinstall the computer cover and connect the power cord. See Chapter 7 “Hardware removal and installation” on page 59.
6. Turn on the computer and leave it on for approximately 10 seconds. Then, turn off the computer by holding the power button for approximately five seconds.
7. Repeat step 1 and step 2.
8. Move the Clear CMOS /Recovery jumper back to the standard position (pin 1 and pin 2).
9. Reinstall the computer cover and connect the power cord.
10. Turn on the computer and the monitor. When the logo screen is displayed, press F1 or Fn+F1.
11. To prevent data loss, ensure that BIOS settings are restored to an earlier point.

Selecting a startup device

If your computer does not start up from the expected device, you can either change the startup device sequence or select a temporary startup device.

Changing the startup device sequence permanently

To change the startup device sequence permanently, do the following:

1. Depending on the type of the storage device, do one of the following:
   - If the storage device is internal, go to step 2.
   - If the storage device is a disc, ensure that your computer is turned on. Then, insert the disc into the optical drive.
   - If the storage device is an external device other than a disc, connect the storage device to the computer.
2. Start the Setup Utility program. See “Starting the Setup Utility program” on page 35.
3. Select **Startup**.
4. Follow the instructions on the right side of the screen to change the startup device sequence.

5. To save settings and exit the Setup Utility program, press F10 or Fn+F10 (depending on the keyboard settings). Then, select **Yes** in the window displayed, and press Enter.

Selecting a temporary startup device

Note: Not all discs and storage drives are bootable.

To select a temporary startup device, do the following:

1. Depending on the type of the storage device, do one of the following:
   - If the storage device is internal, go to step 2.
   - If the storage device is a disc, ensure that your computer is turned on. Then, insert the disc into the optical drive.
   - If the storage device is an external device other than a disc, connect the storage device to the computer.
2. Turn on or restart the computer. Before Windows starts up, repeatedly press and release F12 or Fn+F12 (depending on the keyboard settings) until Startup Device Menu is displayed.
3. Select the desired storage device and press Enter. The computer then starts up from the device you select.

If you want to select a permanent startup device, select **Enter Setup** on Startup Device Menu and press Enter to start the Setup Utility program. For more information about how to select a permanent startup device, see “Changing the startup device sequence permanently” on page 39.

Changing the fan speed level

The Fan Control Stepping item enables you to adjust the thermal performance of your computer. From level 1 to level 7, a higher fan speed level indicates better thermal performance with more noise.

To change the fan speed level, do the following:

1. Start the Setup Utility program. See “Starting the Setup Utility program” on page 35.
2. Select **Power → Fan Control Stepping** and press Enter.
3. Select a fan speed level and press Enter.
4. To save settings and exit the Setup Utility program, press F10 or Fn+F10 (depending on the keyboard settings), select **Yes** in the window displayed, and press Enter.

Exiting the Setup Utility program

To exit the Setup Utility program, do one of the following:

- If you want to save the new settings, press F10 or Fn+F10 (depending on the keyboard settings). Then, select **Yes** in the window displayed and press Enter.
- If you do not want to save the new settings, select **Exit → Discard Changes and Exit** and press Enter. Then, select **Yes** in the window displayed and press Enter.

Updating and recovering the BIOS

The BIOS is the first program that the computer runs when you turn on the computer. The BIOS initializes the hardware components and loads the operating system and other programs.

Updating the BIOS

When you install a new program, hardware device, or device driver, you might be informed to update the BIOS. You can update the BIOS from your operating system or a flash update disc (available only on some models).

To update the BIOS, do the following:

1. Go to https://support.lenovo.com.
2. To update the BIOS from your operating system, download the flash BIOS update driver according to your operating system version. To update the BIOS from a flash update disc, download the ISO image version (used to create a flash update disc). Then, download the installation instructions for the flash BIOS update driver.
3. Print the installation instructions you download and follow the instructions to update the BIOS.

   Note: If you want to update the BIOS from a flash update disc, the installation instructions might not provide the instructions on how to record the update disc. See “Recording a disc” on page 20.

Recovering from a BIOS update failure

To recover from a BIOS update failure, do the following:

1. Remove any media from the drives and turn off all connected devices and the computer. Then, disconnect all power cords from electrical outlets and disconnect all cables that are connected to the computer.
2. Remove the computer cover. See Chapter 7 “Hardware removal and installation” on page 59.
3. Locate the Clear CMOS /Recovery jumper on the system board. See “Hardware locations” on page 1.
4. Remove any parts and cables that impede your access to the Clear CMOS /Recovery jumper.
5. Move the jumper from the standard position (pin 1 and pin 2) to the maintenance position (pin 2 and pin 3).
6. Reinstall the parts and cables that were removed.
7. Reinstall the computer cover and reconnect any cables that were disconnected. See Chapter 7 “Hardware removal and installation” on page 59.
8. Turn on the computer and insert the BIOS update disc into the optical drive. Wait a few minutes. The recovery process begins. After the recovery process is completed, your computer will shut down automatically.

   Note: If the computer does not start up from the disc, select the disc as the startup device. See “Selecting a temporary startup device” on page 40.
9. Repeat steps 1–4.
10. Move the Clear CMOS /Recovery jumper back to the standard position (pin 1 and pin 2).
11. Repeat step 6 and step 7.
12. Turn on the computer and the monitor. When the logo screen is displayed, press F1 or Fn+F1.
13. To prevent data loss, ensure that BIOS settings are restored to an earlier point before the BIOS update.

Configuring RAID

This section provides information about storage drive requirements for RAID levels, and instructions on how to configure RAID for your computer. Depending on your computer model and configuration, you can configure RAID using one of the following utilities:

- Intel Rapid Storage Technology enterprise (RSTe) configuration utility
- AVAGO MegaRAID Configuration Utility

- Intel Virtual RAID on CPU configuration utility

An Introduction to RAID

RAID is a technology that provides increased storage functions and reliability through redundancy.

When a group of independent physical storage drives is set up to use RAID technology, they are in a RAID array. This array distributes data across multiple storage drives, but the array appears to the host computer as one single storage unit. Creating and using RAID arrays provides high performance, such as the expedited I/O performance, because several drives can be accessed simultaneously.

RAID drive groups configured according to certain RAID levels also improve data storage reliability and fault tolerance compared with single-drive storage systems. Data loss resulting from a drive failure can be prevented by reconstructing missing data from the remaining drives.

Note: For RAID 0, the missing data resulting from a drive failure cannot be reconstructed.

Configuring RAID with Intel RSTe

If your computer comes with the Intel RSTe configuration utility, you can follow the sections below to configure RAID with Intel RSTe.

Storage drive requirements for RAID levels

Your computer supports the following RAID levels:

- RAID 0: striped disk array
  - Consists of at least two SATA storage drives
  - Supported strip size: 4 KB, 8 KB, 16 KB, 32 KB, 64 KB, or 128 KB
  - Better performance without fault tolerance
- RAID 1: mirrored disk array
  - Consists of two SATA storage drives
  - Improved reading performance and 100% redundancy
- RAID 10: striped and mirrored disk array (a combination of RAID 0 and RAID 1)
  - Consists of four SATA storage drives
  - Supported strip size: 4 KB, 8 KB, 16 KB, 32 KB, or 64 KB
- RAID 5: block-level striped disk array with distributed parity
  - Consists of at least three SATA storage drives
  - Supported strip size: 16 KB, 32 KB, 64 KB, or 128 KB
  - Better performance and fault tolerance

Creating a RAID volume

Attention: All the existing data stored on the selected drives will be erased while the RAID volume is being created.

To create a RAID volume, do the following:

1. Enable **RAID** by doing the following:
   a. Start the Setup Utility program. See “Starting the Setup Utility program” on page 35.
   b. Select **Devices → PCH SATA Configuration** and press Enter.
   c. Select **Configure SATA as** and press Enter. Then, select **RAID** and press Enter.

d. To save settings and exit the Setup Utility program, press F10 or Fn+F10 (depending on the keyboard settings), select **Yes** in the window displayed, and press Enter.

2. Start the Setup Utility program again. See “Starting the Setup Utility program” on page 35.
3. Select **Advanced → Intel RSTe SATA Controller** and press Enter.
4. Select **Create RAID Volume** and press Enter. The Create RAID Volume window is displayed.
5. Select and configure the options one by one.
   a. **Name**: You can use the default name **Volume0** or type a preferred name for the RAID volume.
   b. **RAID Level**: You can set the RAID level to one of the following:
      - **RAID0**
      - **RAID1**
      - **RAID10**
      - **RAID5**

      Note: Some of the RAID levels might not be displayed because the number of installed SATA storage drives varies.
   c. **Select Disks**: Select a storage drive and press Enter. Then, select **X** and press Enter to add it to a group.
   d. **Strip Size** (if applicable): Select a strip size and press Enter.
   e. **Capacity**: Customize the capacity of the RAID volume. The default RAID volume is the largest value.
6. Select **Create Volume** and press Enter to create a RAID volume.
7. To save settings and exit the Setup Utility program, press F10 or Fn+F10 (depending on the keyboard settings), select **Yes** in the window displayed, and press Enter.

Viewing the information about a RAID volume

To view the information about a RAID volume, do the following:

1. Start the Setup Utility program. See “Starting the Setup Utility program” on page 35.
2. Select **Advanced → Intel RSTe SATA Controller** and press Enter.
3. Select **RAID Volumes** and press Enter.
4. Select a RAID volume and press Enter to view the detailed information.

Deleting a RAID volume

Attention: All the existing data stored on the selected drives will be erased after you delete RAID volumes.

To delete a RAID volume, do the following:

1. Start the Setup Utility program. See “Starting the Setup Utility program” on page 35.
2. Select **Advanced → Intel RSTe SATA Controller** and press Enter.
3. Under **RAID Volumes**, select the RAID volume that you want to delete and press Enter. The RAID VOLUME INFO window is displayed.
4. Select **Delete** under **Volume Actions** and press Enter. When prompted, select **Yes** and press Enter to confirm the deletion of the selected RAID volume.
5. To save settings and exit the Setup Utility program, press F10 or Fn+F10 (depending on the keyboard settings), select **Yes** in the window displayed, and press Enter.

Configuring RAID with AVAGO MegaRAID Configuration Utility

To configure RAID with AVAGO MegaRAID Configuration Utility, ensure that:

- An AVAGO MegaRAID adapter is installed in your computer.
- The storage drives used for RAID configuration are connected to the installed AVAGO MegaRAID adapter instead of the system board.

Storage drive requirements for RAID levels

Your computer supports the following RAID levels:

- RAID 0: striped disk array
  - Consists of at least two SATA or Serial Attached SCSI (SAS) storage drives
  - Supported strip size: 64 KB, 128 KB, 256 KB, 512 KB, or 1 MB
  - Better performance without fault tolerance
- RAID 1: mirrored disk array
  - Consists of two or four SATA or SAS storage drives
  - Improved read performance and 100% redundancy
- RAID 10: striped and mirrored disk array (a combination of RAID 0 and RAID 1)
  - Consists of four SATA or SAS storage drives
  - Data being striped across storage drive groups
  - Provides both high data transfer rates and complete data redundancy
- RAID 5: block-level striped disk array with distributed parity
  - Consists of at least three SATA or SAS storage drives
  - Supported strip size: 64 KB, 128 KB, 256 KB, 512 KB, or 1 MB
  - Better performance and fault tolerance
  - Available only on some models of AVAGO MegaRAID adapters
- RAID 6: block-level striped disk array with dual distributed parity
  - Consists of at least four SATA or SAS storage drives
  - Supported strip size: 64 KB, 128 KB, 256 KB, 512 KB, or 1 MB
  - Better performance and fault tolerance that can stand up to loss of two storage drives
  - Available only on some models of AVAGO MegaRAID adapters

Creating a RAID volume

Attention: All the existing data stored on the selected drives will be erased while the RAID volume is being created.

To create a RAID volume, do the following:

1. Start the Setup Utility program. See “Starting the Setup Utility program” on page 35.
2. Select **Advanced → AVAGO MegaRAID Configuration Utility** and press Enter.
3. Select **Main Menu** and press Enter.
4. Select **Configuration Management** and press Enter.
5. Select **Create Virtual Drive** and press Enter.
6. Select and configure the options one by one.
   a. **Select RAID Level**: You can set the RAID level to one of the following:
      - **RAID0**
      - **RAID1**

- **RAID5**
- **RAID6**
- **RAID10**

Note: Some of the RAID levels might not be displayed because the number of installed SATA storage drives and the model of the AVAGO MegaRAID adapter vary.

b. **Select Drives From**: Select **Unconfigured capacity** or **Free capacity** depending on your needs and press Enter.

c. **Select Drives**: Select a storage drive and press Enter. After selecting all storage drives for creating the RAID volume, select **Apply Changes** and press Enter. When promoted, select **Confirm** and press Enter. Then, select **Yes** and press Enter to save the storage drive selection. Finally, select **OK** and press Enter.

d. **Virtual Drive Name**: You can type a preferred name for the volume name.

e. **Strip Size** (if applicable): Select a strip size and press Enter.

7. Select **Save Configuration** and press Enter. When promoted, select **Confirm** and press Enter. Then, select **Yes** and press Enter to confirm the creation of the RAID volume.
8. To save settings and exit the Setup Utility program, press F10 or Fn+F10 (depending on the keyboard settings), select **Yes** in the window displayed, and press Enter.

Viewing the information about a RAID volume

To view the information about a RAID volume, do the following:

1. Start the Setup Utility program. See “Starting the Setup Utility program” on page 35.
2. Select **Advanced → AVAGO MegaRAID Configuration Utility** and press Enter.
3. Select **Main Menu** and press Enter.
4. Select **Virtual Drive Management** and press Enter.
5. Select a RAID volume and press Enter to view the detailed information.

Deleting a RAID volume

Attention: All the existing data stored on the selected drives will be erased after you delete RAID volumes.

To delete a RAID volume, do the following:

1. Start the Setup Utility program. See “Starting the Setup Utility program” on page 35.
2. Select **Advanced → AVAGO MegaRAID Configuration Utility**.
3. Select **Main Menu** and press Enter.
4. Select **Virtual Drive Management** and press Enter.
5. Select the RAID volume that is not needed and press Enter.
6. Under **Operation**, select **Delete Virtual Drive** and press Enter.
7. Select **Go** and press Enter. When prompted, select **Confirm** and press Enter. Then, select **Yes** and press Enter to delete the RAID volume.
8. To save settings and exit the Setup Utility program, press F10 or Fn+F10 (depending on the keyboard settings), select **Yes** in the window displayed, and press Enter.

Configuring RAID with Intel Virtual RAID on CPU

To configure RAID with the Intel Virtual RAID on CPU configuration utility, ensure that:

- An upgrade key module is connected to the Virtual RAID on CPU (VROC) connector on the system board. See “Hardware locations” on page 1.
- M.2 solid-state drives are installed in your computer.

Storage drive requirements for RAID levels

Your computer supports the following RAID levels:

- RAID 0: striped disk array
  - Consists of at least two M.2 solid-state drives
  - Supported strip size: 4 KB, 8 KB, 16 KB, 32 KB, 64 KB, or 128 KB
  - Better performance without fault tolerance
- RAID 1: mirrored disk array
  - Consists of two M.2 solid-state drives
  - Improved reading performance and 100% redundancy
- RAID 10: striped and mirrored disk array (a combination of RAID 0 and RAID 1)
  - Consists of four M.2 solid-state drives
  - Supported strip size: 4 KB, 8 KB, 16 KB, 32 KB, or 64 KB
- RAID 5: block-level striped disk array with distributed parity
  - Consists of at least three M.2 solid-state drives
  - Supported strip size: 16 KB, 32 KB, 64 KB, or 128 KB
  - Better performance and fault tolerance
  - Available only on some models of upgrade key modules

Creating a RAID volume

Attention: All the existing data stored on the selected drives will be erased while the RAID volume is being created.

To create a RAID volume, do the following:

1. Enable **VMD** for the selected M.2 solid-state drives by doing the following:
   a. Start the Setup Utility program. See “Starting the Setup Utility program” on page 35.
   b. Select **Advanced → Intel(R) VMD technology** and press Enter.
   c. Select each menu item and press Enter. Then, select **Enabled** and press Enter.
   d. Select an occupied M.2 solid-state drive slot as you need and press Enter. Then, select **VMD** and press Enter.
   e. To save settings and exit the Setup Utility program, press F10 or Fn+F10 (depending on the keyboard settings), select **Yes** in the window displayed, and press Enter.
2. Start the Setup Utility program again. See “Starting the Setup Utility program” on page 35.
3. Select **Advanced → Intel Virtual RAID on CPU** and press Enter.
4. Select **All Intel VMD Controllers** and press Enter.
5. Select **Create Volumes** and press Enter.
6. Select and configure the options one by one.
   a. **Name**: You can use the default name **Volume0** or type a preferred name for the RAID volume.
   b. **RAID Level**: You can set the RAID level to one of the following:
      - **RAID0**

- **RAID1**
- **RAID10**
- **RAID5**

Note: Some of the RAID levels might not be displayed because the number of installed M.2 solid-state drives and the model of the upgrade key module vary.

c. **Select Disks**: Select an M.2 solid-state drive and press Enter. Then, select **X** and press Enter to add it to a group.

d. **Stripe Size** (if applicable): Select a stripe size and press Enter.

e. **Capacity**: Customize the capacity of the RAID volume. The default RAID volume is the largest value.

7. Select **Create Volume** and press Enter to create a RAID volume.
8. To save settings and exit the Setup Utility program, press F10 or Fn+F10 (depending on the keyboard settings), select **Yes** in the window displayed, and press Enter.

Viewing the information about a RAID volume

To view the information about a RAID volume, do the following:

1. Start the Setup Utility program. See “Starting the Setup Utility program” on page 35.
2. Select **Advanced → Intel Virtual RAID on CPU** and press Enter.
3. Select **RAID Volumes** and press Enter.
4. Select a RAID volume and press Enter to view the detailed information.

Deleting a RAID volume

Attention: All the existing data stored on the selected drives will be erased after you delete RAID volumes.

To delete a RAID volume, do the following:

1. Start the Setup Utility program. See “Starting the Setup Utility program” on page 35.
2. Select **Advanced → Intel Virtual RAID on CPU** and press Enter.
3. Select **Intel VROC Mananged Volumes** and press Enter.
4. Under **Volume Actions**, select **Delete** and press Enter.
5. When prompted, select **Yes** and press Enter to confirm the deletion of the selected RAID volume.
6. To save settings and exit the Setup Utility program, press F10 or Fn+F10 (depending on the keyboard settings), select **Yes** in the window displayed, and press Enter.

Chapter 6. Troubleshooting, diagnostics, and recovery

This chapter provides solutions to resolve your computer problems. Follow the steps in the basic procedure for resolving computer problems, which helps you make good use of the troubleshooting, diagnostics, and recovery information.

Basic procedure for resolving computer problems

It is recommended that you use the following procedure to resolve computer problems you are experiencing:

1. Ensure that:
   a. The cables for all connected devices are connected correctly and securely.
   b. All connected devices that require ac power are connected to properly grounded, functioning electrical outlets.
   c. All connected devices are enabled in the BIOS settings of your computer. See “Enabling or disabling a device” on page 36.

   If these actions do not resolve your problem, continue with the next step.
2. Use an antivirus program to see if your computer has been infected by a virus. If the program detects a virus, remove the virus. If the antivirus program does not resolve your problem, continue with the next step.
3. Go to “Troubleshooting” on page 49 and follow the instructions for the type of problem you are experiencing. If these troubleshooting instructions do not resolve your problem, continue with the next step.
4. Run the diagnostic program. See “Diagnosing problems” on page 56. If the diagnostic program does not resolve your problem, continue with the next step.
5. Recover your operating system. See “Recovery information” on page 58.
6. If none of these actions solve your problem, contact the Lenovo Customer Support Center. For a list of Lenovo Support phone numbers, go to http://www.lenovo.com/support/phone. For more information about help, service, and technical assistance, see Chapter 8 “Getting information, help, and service” on page 137.

Troubleshooting

Attention: Do not open your computer or attempt any repair before reading and understanding the “Read this first: Important safety information” on page iii.

Use the troubleshooting information to find solutions to problems that have definite symptoms.

Startup problems

The computer does not start up when you press the power button.

Solutions:

Ensure that:

- The power cord is correctly connected to the rear of the computer and to a working electrical outlet.
- If your computer has a secondary power switch on the rear of the computer, ensure that it is switched on.
- The power indicator on the front of the computer is on.

© Copyright Lenovo 2018, 2020

- The computer voltage matches the voltage available at the electrical outlet for your country or region.

The operating system fails to start up.

Solution:

Ensure that the startup device sequence set in the Setup Utility program includes the device where the operating system resides. Usually, the operating system is on the internal storage drive. For more information, see “Changing the startup device sequence permanently” on page 39.

The computer beeps multiple times before the operating system starts up.

Solution:

Ensure that no keys are stuck.

Audio problems

The audio cannot be heard on the Windows operating system.

Solutions:

- If you are using powered external speakers that have an On/Off control, ensure that:
  - The On/Off control is set to the **On** position.
  - The speaker power cable is connected to a properly grounded, functional ac electrical outlet.
- If your external speakers have a volume control, ensure that the volume is not set too low.
- Click the volume icon in the Windows notification area on the taskbar. Ensure that the mute speakers settings are not selected and none of the volume settings is set too low.

  Note: If the volume icon is not displayed in the Windows notification area, add the icon to the notification area. See the Windows help system.
- For some computers that have a front audio panel, ensure that the volume is not set too low.
- Ensure that your external speakers (and headphones, if used) are connected to the correct audio connectors on the computer. Most speaker cables are color-coded to match the connectors.

  Note: When external-speaker or headphone cables are connected to the audio connectors, the internal speaker, if present, is disabled. In most cases, if an audio adapter is installed in one of the expansion slots, the audio function built into the system board is disabled. Therefore, you must use the audio connectors on the audio adapter.
- Ensure that the program you are running is designed for use on the Windows operating system. If the program is designed to run in DOS, the program does not use the Windows sound feature. The program must be configured to use Sound Blaster Pro or Sound Blaster emulation.
- Ensure that the audio device drivers are correctly installed.

The sound comes from one of the external speakers.

Solutions:

- Ensure that the speaker cable is inserted completely into the connector on the computer.
- Right-click the volume icon in the Windows notification area on the taskbar. Then, click **Open Volume Mixer** and select the desired speaker. Click the **Levels** tab and ensure that the Balance settings are set correctly.

  Note: If the volume icon is not displayed in the Windows notification area, add the icon to the notification area. See the Windows help system.

CD or DVD problems

A CD or DVD does not work.

Solutions:

- Ensure that the power cable and signal cable are securely connected to the drive.
- Ensure that the disc is inserted correctly, with its label up.
- Ensure that the disc you are using is clean. To remove dust or fingerprints, wipe the disc clean with a soft cloth from the center to the outside. Wiping a disc in a circular motion might cause loss of data.
- Ensure that the disc you are using is not scratched or damaged. Try inserting another disc that you know is good. If you cannot read from a known-good disc, you might have a problem with your optical drive or the cabling to your optical drive.
- If you have multiple CD or DVD drives installed (or a combination of CD and DVD drives), try inserting the disc into the other drive. In some cases, only one of the drives is connected to the audio subsystem.

A bootable recovery medium, such as the Product Recovery CD, cannot be used to start your computer.

Solution:

Ensure that the CD or DVD drive is set as the top priority of the Boot Priority Order in the Setup Utility program. Refer to “Selecting a temporary startup device” on page 40 for information about viewing and changing the startup sequence.

Note: On some computer models, the startup sequence is permanently set and cannot be changed.

A black screen is displayed instead of the DVD video.

Solutions:

- Restart the DVD player program.
- Try a lower screen resolution or color depth.
- Close any open files, and then restart the computer.

A DVD movie does not play.

Solutions:

- Ensure that the disc surface is clean and not scratched.
- Check the disc or package for regional coding. You might need to purchase a disc with coding for the region where you are using your computer.

No audio or only an intermittent audio comes out while a DVD movie is playing.

Solutions:

- Check the volume control settings on your computer and on your speakers.
- Ensure that the disc surface is clean and not scratched.
- Check all cable connections to and from the speakers.
- Use the DVD menu for the video to select a different audio track.

The playback is slow or choppy.

Solutions:

- Disable any background programs, such as AntiVirus or Desktop Themes.

- Ensure that video resolution is lower than 1152 x 864 pixels.

A message indicating invalid disc or no disc found is displayed.

Solutions:

- Ensure that the disc is in the drive with the shiny side of the disc facing down.
- Ensure that video resolution is lower than 1152 x 864 pixels.
- Ensure that the DVD or CD is inserted into an appropriate optical drive. For example, do not insert a DVD into a CD-only drive.

Intermittent problems

Intermittent problems refer to the problems occur only occasionally and are difficult to repeat.

Solutions:

- Ensure that all cables and cords are securely connected to the computer and attached devices.
- Ensure that when the computer is on, the fan grill is not blocked (there is air flow around the grill), and the fans are working. If airflow is blocked or the fans are not working, the computer might overheat.
- If Small Computer System Interface (SCSI) devices are installed, ensure that the last external device in each SCSI chain is terminated correctly. For more information, see your SCSI documentation.

Storage drive problems

Some or all storage drives are missing from the Setup Utility program.

Solutions:

- Ensure that the signal cables and power cables for all the storage drives are connected correctly.
- If the computer is installed with SAS storage drives, ensure that the AVAGO MegaRAID adapter is correctly connected.

The computer cannot start up from the correct storage drive or the message “No Operating System Found” is displayed.

Solutions:

- Ensure that the signal cables and power cables for all the storage drives are connected correctly.
- Ensure that the computer starts up from the correct storage drive. Set the storage drive, on which the operating system resides, as the first startup device in the Setup Utility program. Refer to “Changing the startup device sequence permanently” on page 39.

Note: In rare cases, the storage drive with the operating system might get corrupted or damaged. If this problem occurs, replace the storage drive. Refer to Chapter 7 “Hardware removal and installation” on page 59.

Ethernet LAN problems

The computer cannot connect to an Ethernet LAN.

Solutions:

- Connect the cable from the Ethernet connector to the RJ45 connector of the hub.
- Enable the Ethernet LAN feature in the Setup Utility program.
- Enable the Ethernet LAN adapter.

1. Click the Start button to open the Start menu.
2. Click **Windows System → Control Panel**.
3. View Control Panel by Large icons or Small icons, and then click **Network and Sharing Center → Change adapter settings**.
4. Right-click the Ethernet LAN adapter icon and click **Enable**.

- Update or reinstall the Ethernet LAN driver. See “Keeping your computer current” on page 28.
- Install all networking software that is necessary for your network environment. Check with your LAN administrator for the necessary networking software.
- Set the same duplex for the switch port and the adapter. If you configured the adapter for full duplex, ensure that the switch port is also configured for full duplex. Setting the wrong duplex mode might degrade performance, cause data loss, or result in lost connections.

When a Gigabit Ethernet model computer is used at a speed of 1000 Mbps, the Ethernet LAN connection fails or errors occur.

Solution:

Connect the network cable to the Ethernet connector using Category 5 wiring and a 100 BASE-T hub/switch (not 100 BASE-X).

A Gigabit Ethernet model computer should connect to the network at a speed of 1000 Mbps but at only a speed of 100 Mbps.

Solutions:

- Try another cable.
- Set the link partner to auto-negotiate.
- Set the switch to be 802.3ab-compliant (gigabit over copper).

The Wake On LAN feature does not work.

Solution:

Enable the Wake On LAN feature in the Setup Utility program.

Wireless LAN problem

Note: The wireless LAN feature is available only on some models.

The wireless LAN feature does not work.

Solutions:

- Enable the wireless LAN feature in the Setup Utility program.
- For Windows 10, enable the wireless LAN feature in Windows Settings. Click the Start button to open the Start menu, and then click **Settings → Network & Internet → Wi-Fi**. Turn on the Wi-Fi feature.
- Enable the wireless LAN adapter.
  1. Click the Start button to open the Start menu.
  2. Click **Windows System → Control Panel**.
  3. View Control Panel by Large icons or Small icons, and then click **Network and Sharing Center → Change adapter settings**.
  4. Right-click the wireless LAN adapter icon and click **Enable**.
- Update or reinstall the wireless LAN driver. See “Keeping your computer current” on page 28.

Bluetooth problems

Note: The Bluetooth feature is available only on some models.

The Bluetooth feature does not work.

Solutions:

- Enable the Bluetooth feature in the Setup Utility program.
- Enable the Bluetooth devices. Do the following:
  1. Right-click the Start button to open the Start context menu.
  2. Click **Device Manager**. Type the administrator password or provide confirmation if prompted.
  3. Expand **Bluetooth** to display the Bluetooth devices. Then, right-click each Bluetooth device and then Click **Enable device**.
  4. Expand **Network adapters**. Then, right-click each Bluetooth device and then Click **Enable device**.
- Turn on the Bluetooth radio on Windows 10. Do the following:
  1. Click the Start button to open the Start menu.
  2. Click **Settings → Devices → Bluetooth & other devices**.
  3. Turn on the **Bluetooth** switch to enable the Bluetooth feature.
- Update or reinstall the Bluetooth driver. See “Keeping your computer current” on page 28.

No sound comes from the Bluetooth headset or headphones.

Solution:

Set the Bluetooth headset or headphones as the default device.

1. Exit the application that uses the sound device (for example, Windows Media Player).
2. Right-click the volume icon in the Windows notification area on the taskbar.

   Note: If the volume icon is not displayed in the Windows notification area, add the icon to the notification area. See the Windows help system.
3. Click **Playback devices**.
4. If you are using the Headset profile, select **Bluetooth Hands-free Audio**, and then click **Set Default**. If you are using the AV profile, select **Stereo Audio**, and then click **Set Default**.
5. Click **OK**.

Performance problems

Excessive fragmented files exist on the storage drives.

Solution:

Use the Windows disk defragmentation or disk optimization feature to clean up the files.

Note: Depending on the volume of the storage drives and amount of data stored on the storage drives, the disk-defragmentation process might take up to several hours.

1. Close any open programs and windows.
2. Click the Start button to open the Start menu.
3. Click **Windows System → File Explorer → This PC**.
4. Right-click your C drive and then click **Properties**.

5. Click the **Tools** tab.
6. Click **Optimize**. Select the desired drive and then click **Optimize**.
7. Follow the instructions on the screen.

The free storage drive space is insufficient.

Solutions:

Free up the storage drive space.

- Clean out your Inbox, Sent Items, and Deleted Items folders from your e-mail application.
- Clean up your C drive.
  1. Click the Start button to open the Start menu.
  2. Click **Windows System → File Explorer → This PC**.
  3. Right-click your C drive and then click **Properties**.
  4. Check the amount of free space, and then click **Disk Cleanup**.
  5. A list of unnecessary file categories is displayed. Select each file category you want to delete, and then click **OK**.
- Turn some Windows features off or remove some unnecessary programs.
  1. Click the Start button to open the Start menu.
  2. Click **Windows System → Control Panel**.
  3. View Control Panel by Large icons or Small icons, and then click **Programs and Features**.
  4. Do one of the following:
     - To turn some Windows features off, click **Turn Windows features on or off**. Follow the instructions on the screen.
     - To remove some unnecessary programs, select the program you want to remove, and then click **Uninstall/Change** or **Uninstall**.

The free memory space is insufficient.

Solutions:

- Right-click a blank area on the taskbar and open Task Manager. Then, end some tasks you are not performing.
- Install additional memory modules. See Chapter 7 “Hardware removal and installation” on page 59. To purchase memory modules, go to:
  https://www.lenovo.com

Serial connector problem

The serial connector cannot be accessed.

Solutions:

- Connect the serial cable from the serial connector on the computer to the serial device. If the serial device has its own power cord, connect the power cord to a grounded electrical outlet.
- Turn on the serial device and keep the device online.
- Install any programs supplied with the serial device. Refer to the documentation that comes with the serial device for more information.
- If you added one serial-connector adapter, ensure that the adapter is installed correctly.

USB device problems

A USB device cannot be accessed.

Solutions:

- Connect the USB cable from the USB connector to the USB device. If the USB device has its own power cord, connect the power cord to a grounded electrical outlet.
- Turn on the USB device and keep the device online.
- Install any device drivers or programs supplied with the USB device. Refer to the documentation that comes with the USB device for more information.
- Disconnect and reconnect the USB connector to reset the USB device.
- Ensure that the Smart USB Protection function is disabled. To configure the Smart USB Protection function, see “Using the Smart USB Protection function” on page 32.

Software and driver problems

For some programs, dates cannot be sorted in correct order.

Solution:

Some programs developed before the year 2000 use only the last two digits of a year to sort dates, assuming the first two digits are 19. Consequently, dates cannot be sorted in correct order nowadays. Check with your software manufacturer to see if any updates are available. Many software manufacturers make updates available from the World Wide Web.

Some programs do not work as expected.

Solutions:

1. Check whether the problem is caused by a program.
   a. Ensure that the software is compatible with your computer. Refer to the information supplied with the software for more information.
   b. Verify that other software works properly on your computer.
   c. Verify that the software you are using works on another computer.
2. If the problem is caused by a program:
   - Refer to the printed documentation that comes with the program or the help system of the program for troubleshooting information.
   - Update the program. See “Keeping your computer current” on page 28.
   - Uninstall the program and then reinstall it. To download a program that is preinstalled on your computer, go to https://support.lenovo.com and follow the instructions on the screen.

A device does not work properly due to device driver problems.

Solution:

Update the device driver. See “Keeping your computer current” on page 28.

Diagnosing problems

Many computer problems can be solved without outside assistance. If you experience a problem with your computer, the first place to start is the troubleshooting information in your computer documentation. If you suspect a software problem, see the documentation, including readme files and help information systems,

that come with the operating system or program. ThinkStation computers come with a set of diagnostic programs that you can use to help you identify hardware problems.

Diagnosing problems with Lenovo Vantage

Lenovo Vantage is preinstalled on your computer and is ready to run.

Note: If you are unable to isolate and repair the problem yourself after running Lenovo Vantage, save and print the log files created by the program. You need the log files when you speak to a Lenovo technical support representative.

Lenovo Vantage supports the hardware scan function. It combines diagnostic tests, system information collection, security status, and support information, along with hints and tips for optimal system performance.

The troubleshooting information or the diagnostic programs might tell you that you need additional or updated device drivers or other software. You can get the latest technical information and download device drivers and updates from the Lenovo Support Web site at:
https://support.lenovo.com

Diagnosing problems with ThinkStation Diagnostics

ThinkStation Diagnostics is preinstalled on your computer and also is available for download at:
https://www.lenovo.com/diags

ThinkStation Diagnostics enables you to troubleshoot and resolve computer problems. The program notifies you of any issues detected by the real-time hardware diagnostic monitoring function. The program also provides the details of the issue, analyzes possible causes, and provides solutions.

Hardware diagnostics

The hardware diagnostics function enables your computer to monitor hardware components in real time for potential issues or errors without impacting the performance. When an issue or error is detected, hardware diagnostic information is presented in either of the following ways:

- If the ThinkStation Diagnostics application is installed and running on your computer, an issue or error message is displayed in the Windows notification area. Go to ThinkStation Diagnostics for more information and suggested solutions.
- If the ThinkStation Diagnostics application is not installed or running on your computer, depending on your computer configuration, do either of the following:
  1. If your computer has the four-digit diagnostic display installed, an error code is displayed on the four-digit diagnostic display on the front of the computer. Check the error code at the following Web site:
     https://thinkworkstationsoftware.com/diags
  2. If the signal diagnostic LED indicator is available on your computer, the diagnostic LED indicator blinks to indicate that an issue or error is detected. Then you can use the Lenovo PC Diagnostics application installed in your smartphone to transfer the error code from the computer to the smartphone for further analysis. The application is available for download at both Google Play and iTunes App Store.

The hardware diagnostics function is enabled on your computer by default. If you want to disable the function, do the following:

1. Start the Setup Utility program. See “Starting the Setup Utility program” on page 35.
2. From the main interface, select **Advanced → Diagnostics**, and then press Enter.
3. Select **Real-time Diagnostics Monitoring** and press Enter. Then select **Disabled** and press Enter.

4. To save settings and exit the Setup Utility program, press F10 or Fn+F10 (depending on the keyboard settings). Then, select **Yes** in the window displayed, and press Enter.

Recovery information

This section provides instructions on how to recover your operating system.

Note: If a device does not work correctly after recovering the operating system, update the device driver. See “Keeping your computer current” on page 28.

To recover your Windows 10 operating system, use the following solutions:

- Use Windows recovery solutions.
  - Use recovery solutions in Windows Settings.
    1. Click the Start button to open the Start menu.
    2. Click **Settings → Update & Security → Recovery**.
    3. Follow the instructions on the screen to choose the appropriate recovery solution.
  - Use System Restore to restore system files and settings to an earlier point.
    1. Click the Start button to open the Start menu.
    2. Click **Windows System → Control Panel**.
    3. View Control Panel by Large icons or Small icons, and then click **Recovery → Open System Restore**.
    4. Follow the instructions on the screen.
  - Use the File History tool to restore your files from a backup.

    Note: If you use the File History tool to restore your files from a backup, ensure that you backed up your data earlier with the tool.
    1. Click the Start button to open the Start menu.
    2. Click **Windows System → Control Panel**.
    3. View Control Panel by Large icons or Small icons, and then click **File History → Restore personal files**.
    4. Follow the instructions on the screen.
  - Use the Windows recovery environment by doing one of the following:
    - After several consecutive failed boot attempts, the Windows recovery environment might start automatically. Follow the instructions on the screen to choose the appropriate recovery solution.
    - Select the recovery medium you created earlier with the Windows tool as the startup device. See “Selecting a temporary startup device” on page 40. Then, follow the instructions on the screen to choose the appropriate recovery solution.
- Use the recovery USB key provided by Lenovo to restore the entire storage drive to the factory-default settings.
  - If your computer comes with the recovery USB key, follow the instructions shipped with the USB key.
  - If your computer does not come with the recovery USB key, contact the Lenovo Customer Support Center to order a recovery USB key. See “Calling for service” on page 138.

Chapter 7. Hardware removal and installation

This chapter provides instructions on how to remove and install hardware for your computer.

Handling static-sensitive devices

Do not open the static-protective package containing the new part until the defective part has been removed and you are ready to install the new part. Static electricity, although harmless to you, can seriously damage computer components and options.

When you handle options and other computer components, take these precautions to avoid static-electricity damage:

- Limit your movement. Movement can cause static electricity to build up around you.
- Always handle options and other computer components carefully. Handle PCI/PCIe cards, memory modules, system boards, and microprocessors by the edges. Never touch any exposed circuitry.
- Prevent others from touching the options and other computer components.
- Touch the static-protective package containing the part to a metal expansion-slot cover or other unpainted metal surface on the computer for at least two seconds. This reduces static electricity from the package and your body before you install or replace a new part.
- When possible, remove the new part from the static-protective package, and install it directly in the computer without setting the part down. When this is not possible, place the static-protective package on a smooth, level surface and place the part on the package.
- Do not place the part on the computer cover or other metal surface.

Preparing your computer and removing the computer cover

Attention: Do not open your computer or attempt any repair before reading and understanding the “Read this first: Important safety information” on page iii.

CAUTION:



Avoid contact with hot components inside the computer. During operation, some components become hot enough to burn the skin. Before you open the computer cover, turn off the computer, disconnect power, and wait approximately 10 minutes for the components to cool.

Before installing or removing any hardware component in your computer, do the following to prepare your computer and remove the computer cover:

1. Remove any media from the drives and turn off all attached devices and the computer. Then, disconnect all power cords from electrical outlets and disconnect all cables that are connected to the computer.
2. Unlock any locking device that secures the computer cover. See “Locking your computer” on page 29.

© Copyright Lenovo 2018, 2020

3. Press the handle of the computer cover so that the handle is lifted.

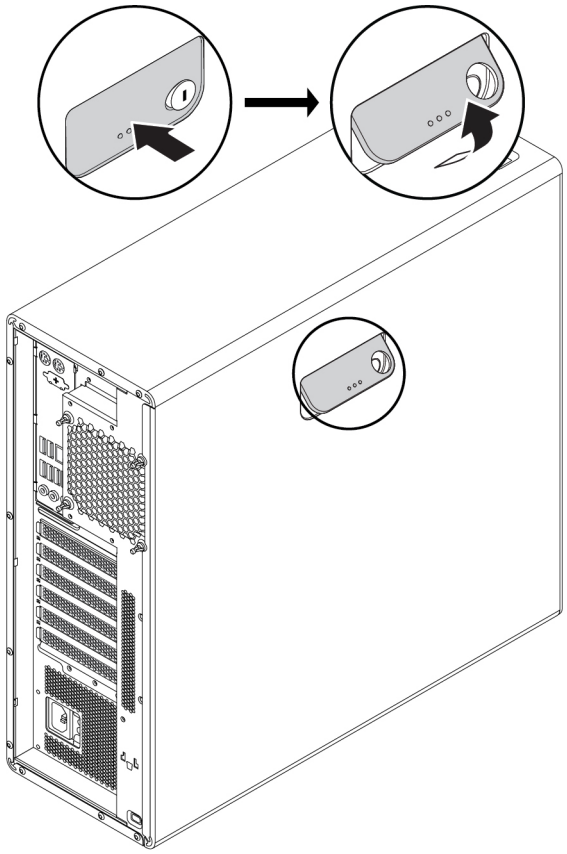

Figure 9. Opening the handle on the computer cover

4. Gently lift the handle and remove the cover from the chassis.

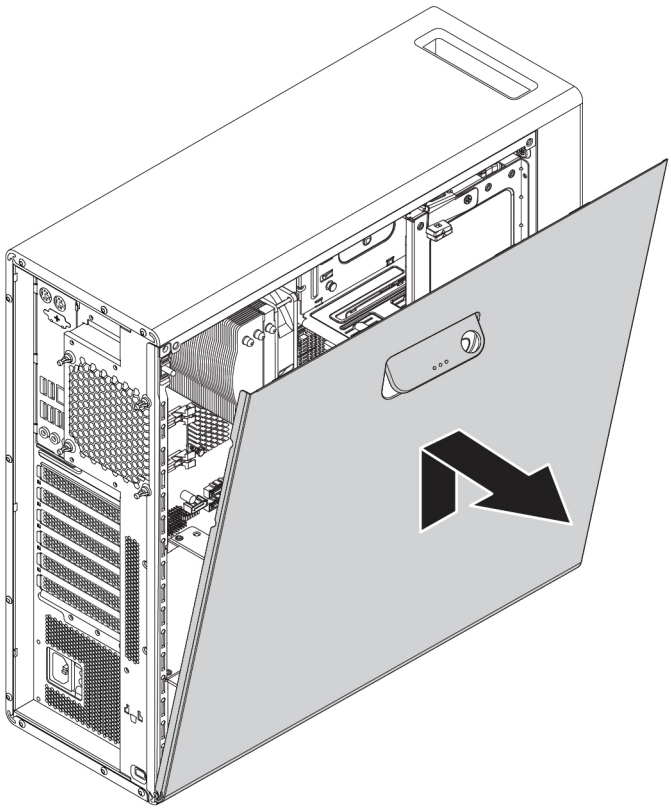

Figure 10. Removing the computer cover

Notes:

- Depending on your computer model, some of the hardware parts in the installing or replacing section might not be available.
- Use computer parts provided only by Lenovo.
- When installing or replacing an option, use the appropriate instructions in this section along with the instructions that come with the option.
- In most areas of the world, Lenovo requires the return of the defective CRU. Information about this will come with the CRU or will come a few days after the CRU arrives.

Removing and installing hardware

This section provides instructions on how to remove and install hardware for your computer. You can expand the capabilities of your computer and maintain your computer by removing or installing hardware.

Attention: Do not open your computer or attempt any repair before reading and understanding the “Read this first: Important safety information” on page iii.

External options

You can connect external options to your computer, such as external speakers, a printer, or a scanner. For some external options, you must install additional software in addition to making the physical connection.

When installing an external option, see “Hardware locations” on page 1 to identify the required connector. Then, use the instructions that come with the option to help you make the connection and install any required software or device drivers.

Device in the flex bay

Attention: Do not open your computer or attempt any repair before reading and understanding the “Read this first: Important safety information” on page iii.

The flex bay of your computer supports the following devices:

- Flex module
- Front-access storage enclosure
- Multi-drive conversion kit
- Optical drive
- Slim-optical-drive adapter
- Storage drive bracket

Note: The following instructions on how to remove or install an optical drive also apply to other supported devices in the flex bay.

To remove or install an optical drive, do the following:

1. Prepare your computer. See “Preparing your computer and removing the computer cover” on page 59.
2. Locate the flex bay. See “Computer components” on page 7.
3. To remove the optical drive, do the following:
   a. Disconnect the signal cable and the power cable from the rear of the optical drive.

      Note: If you are removing other supported devices from the flex bay, disconnect any additional cables first.

b. Then, lift the tab 1 upward as shown, and push the rear of the optical drive to slide it out of the computer.

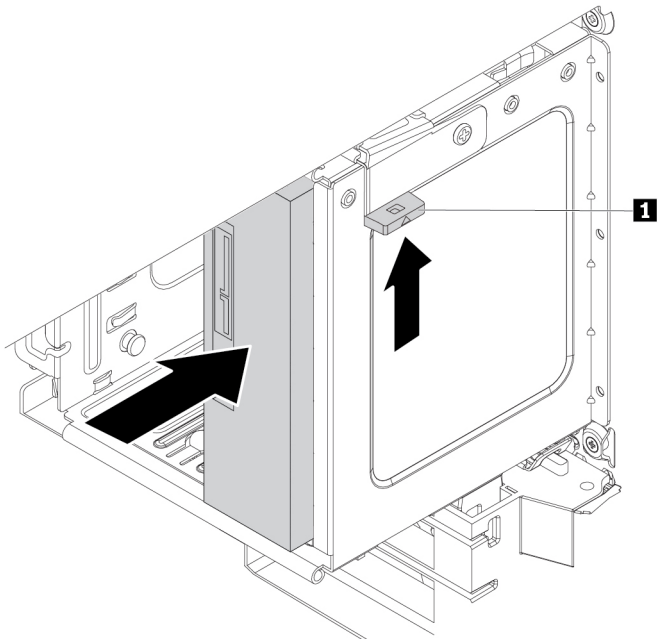

Figure 11. Removing the optical drive

4. To install an optical drive, do the following:

a. If you are installing an optical drive into a flex bay with a plastic shield installed, press the clip as shown to remove the plastic shield. If there is a metal static shield installed in the flex bay, remove the metal static shield.

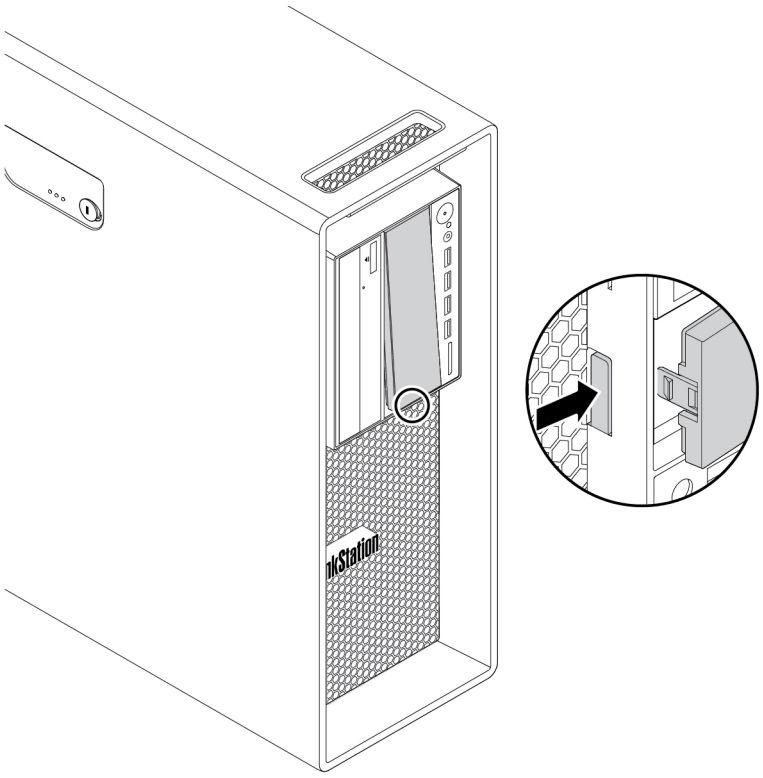

Figure 12. Removing the plastic shield in the flex bay

b. Lift the tab 1 upward as shown, and slide the new optical drive halfway into the bay from the front of the computer. Then, release the tabs and continue to slide the optical drive into the bay until it snaps into position.

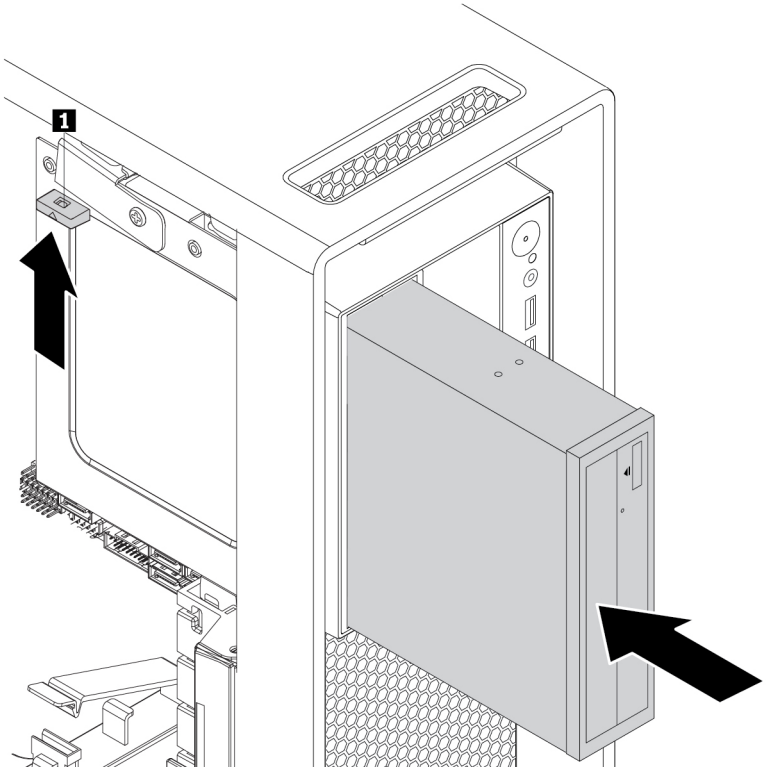

Figure 13. Installing the optical drive

c. Connect the signal cable and the power cable to the new optical drive.

Note: Reconnect any cables removed from other supported devices.

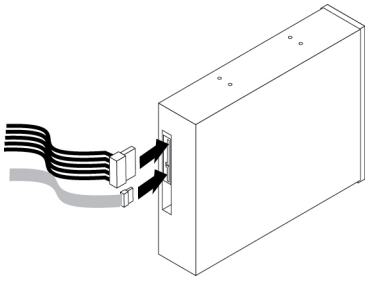

Figure 14. Connecting cables to the optical drive

What to do next:

- To work with another piece of hardware, go to the appropriate section.
- To complete the installation or replacement, go to “Completing the parts replacement” on page 134.

Storage drive in the front-access storage enclosure

Attention: Do not open your computer or attempt any repair before reading and understanding the “Read this first: Important safety information” on page iii.

You can install or replace a storage drive in the front-access storage enclosure. The storage drive also can be hot-swappable, which means that you can install or replace the drive without even turning off your computer. Therefore, lock the enclosure cover to prevent the unexpected removal. The keys are attached at the rear of the computer. Store the keys in a secure place.

The storage drive in the front-access storage enclosure is hot-swappable only when the following requirements are met:

- The SATA cable of the front-access storage enclosure is connected to the eSATA connector on the system board. To verify the cable connection, see “Preparing your computer and removing the computer cover” on page 59 and “Parts on the system board” on page 8 for more information.
- The operating system of your computer does not reside on the storage drive installed in the front-access storage enclosure.

Attention: If any of the above requirements are not met, do not remove or install the storage drive when the computer is turned on. Otherwise, data on the storage drive might get damaged.

3.5-inch storage drive

To remove or install a 3.5-inch storage drive, do the following:

1. Before removing an old 3.5-inch storage drive, safely eject the old storage drive from the operating system first. For more information, see the Windows help system.
2. Unlock the enclosure cover with the provided key as shown. Press the notch **a** to open the enclosure cover.

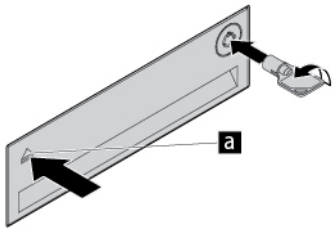

Figure 15. Opening the front-access storage enclosure cover

3. Press the pit on the bracket cover, and then grasp the tilted cover to pull the bracket out of the front-access storage enclosure.

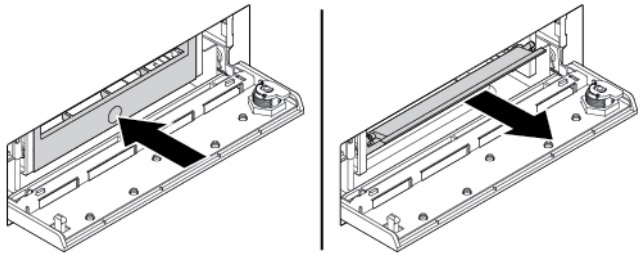

Figure 16. Removing the bracket from the front-access storage enclosure

4. To remove the 3.5-inch storage drive, flex both sides of the bracket to remove the 3.5-inch storage drive from the bracket.

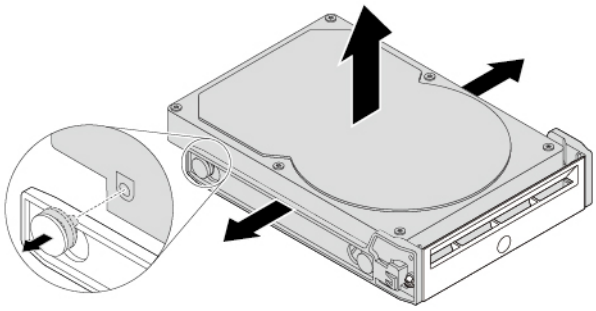

Figure 17. Removing the 3.5-inch storage drive from the bracket

5. To install a new 3.5-inch storage drive, flex both sides of the bracket and align pins 1 on the bracket with the corresponding holes in the new drive.

   Notes:

   - Ensure that the circuit board faces downward and the connectors face toward the rear of the bracket.
   - Do not touch the circuit board on the storage drive during operation.

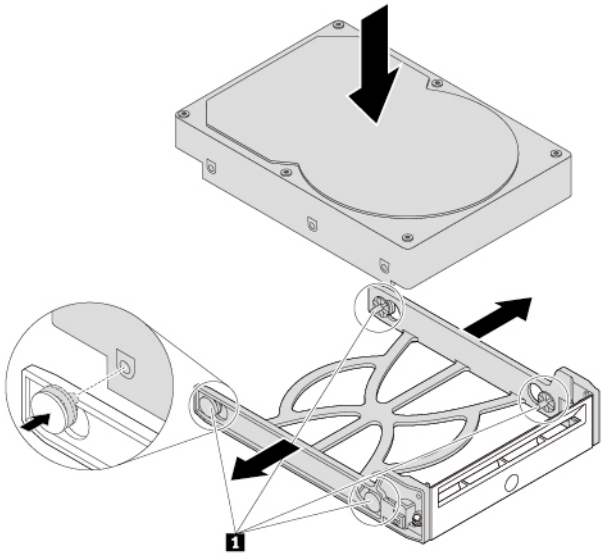

Figure 18. Installing the 3.5-inch storage drive into the bracket

6. Slide the bracket with the new 3.5-inch storage drive into the front-access storage enclosure until it snaps into position. Press the notch to secure the enclosure cover and lock the enclosure cover with the key.

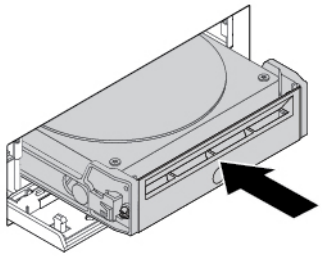

Figure 19. Installing the 3.5-inch storage drive into the front-access storage enclosure

What to do next:

- To work with another piece of hardware, go to the appropriate section.
- To complete the installation or replacement, go to “Completing the parts replacement” on page 134.

2.5-inch storage drive

To remove or install a 2.5-inch storage drive, do the following:

1. Before removing an old 2.5-inch storage drive, safely eject the old storage drive from the operating system first. For more information, see the Windows help system.
2. Unlock the enclosure cover with the provided key as shown. Press the notch a to open the enclosure cover.

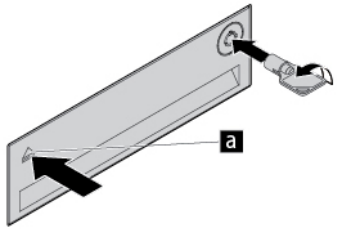

Figure 20. Opening the front-access storage enclosure cover

3. Press the pit on the bracket cover, and then grasp the tilted cover to pull the bracket out of the front-access storage enclosure.

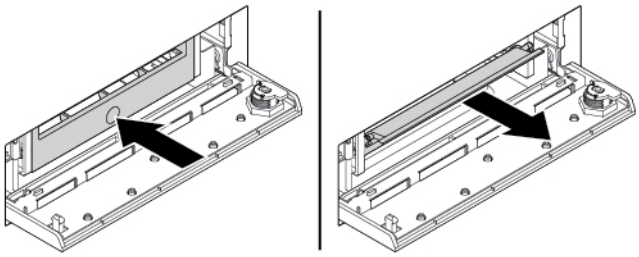

Figure 21. Removing the bracket from the front-access storage enclosure

4. To remove the 2.5-inch storage drive, do the following:
   a. Flex both sides of the bracket to remove the 2.5-inch storage drive from the bracket.

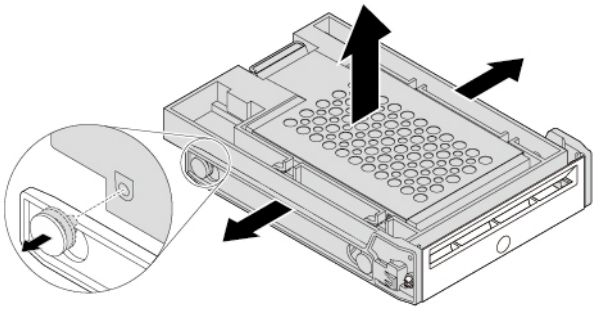

Figure 22. Removing the 2.5-inch storage drive from the bracket

b. Lift the tab 1 of the metal bracket and push the metal bracket with force as shown. Then slide the bracket and remove it from the plastic frame.

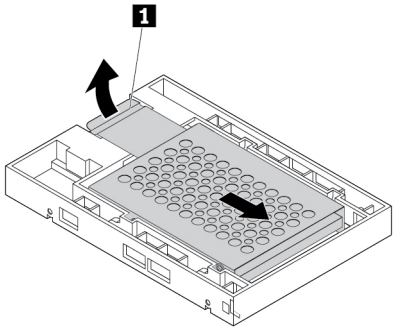

Figure 23. Removing the metal bracket from the plastic frame of the converter

c. Carefully flex both sides of the metal bracket to remove the storage drive from the bracket.

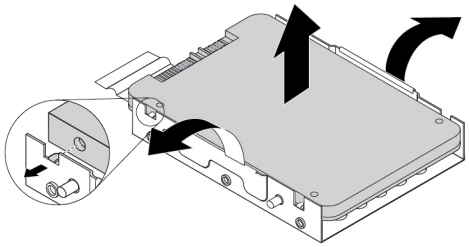

Figure 24. Removing the storage drive from the metal bracket

5. To install a new 2.5-inch storage drive into the front-access storage enclosure, do the following:
   a. Carefully flex both sides of the metal bracket and align the four tabs 1 on the metal bracket with the corresponding holes in the new storage drive.

      Note: Ensure that the connectors of the storage drive face toward the tab of the metal bracket.

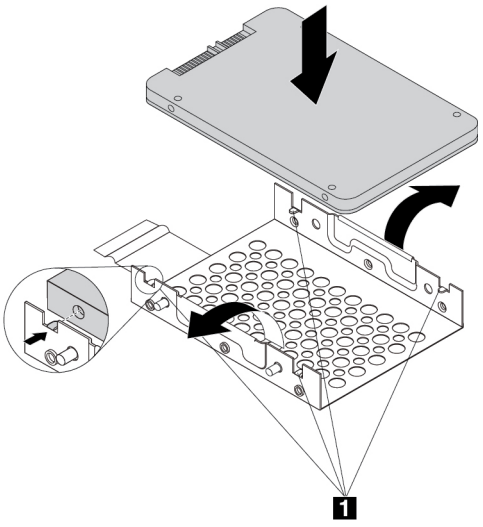

Figure 25. Installing the 2.5-inch storage drive into the metal bracket

b. Insert the four posts 1 on the metal bracket into the corresponding slots in the plastic frame as shown.

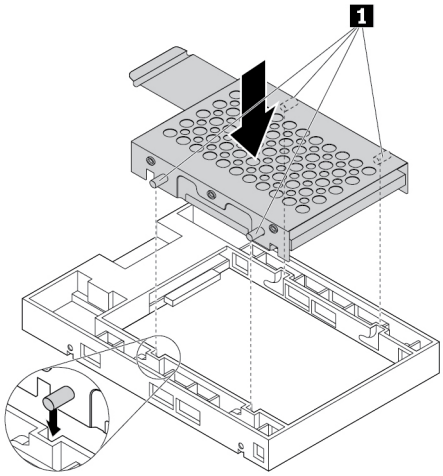

Figure 26. Inserting the metal bracket into the plastic frame of the converter

c. Push the metal bracket down until the tab 1 is slightly curved. Then, push the bracket with the storage drive forward as shown until the tab 1 snaps into position.

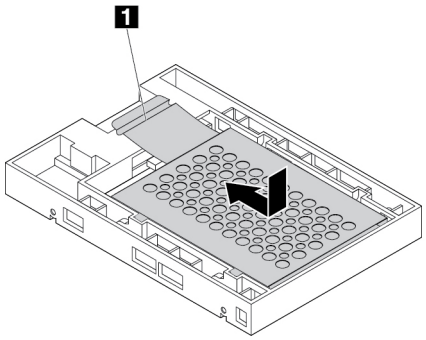

Figure 27. Installing the metal bracket into the plastic frame of the converter

d. Flex both sides of the plastic bracket and align pins 1 on the plastic bracket with the corresponding holes in the plastic frame of the converter.

Notes:

- Ensure that the circuit board faces downward and the connectors face toward the rear of the bracket.
- Do not touch the circuit board on the storage drive during operation.

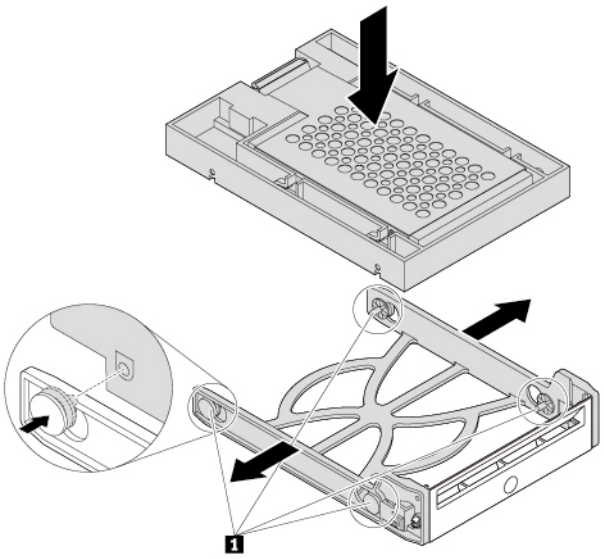

Figure 28. Installing the converter with the 2.5-inch storage drive into the plastic bracket

6. Slide the plastic bracket with the new 2.5-inch storage drive into the front-access storage enclosure until it snaps into position. Press the notch to secure the enclosure cover and lock the enclosure cover with the key.

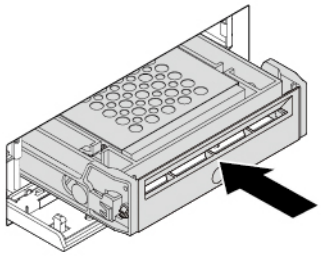

Figure 29. Installing the bracket with the 2.5-inch storage drive into the front-access storage enclosure

What to do next:

- To work with another piece of hardware, go to the appropriate section.
- To complete the installation or replacement, go to “Completing the parts replacement” on page 134.

Device in the multi-drive conversion kit

Attention: Do not open your computer or attempt any repair before reading and understanding the “Read this first: Important safety information” on page iii.

The multi-drive conversion kit (hereafter referred to as kit) might be equipped with either one or both of the following components:

- Slim optical drive
- Storage drive (such as hard disk drive, solid-state drive, or hybrid drive)

Slim optical drive

Note: The instructions on how to remove or install a slim optical drive in the kit also apply to the slim-optical-drive adapter.

To remove or install a slim optical drive, do the following:

1. Prepare your computer. See “Preparing your computer and removing the computer cover” on page 59.
2. Ensure that all the cables are disconnected from the kit. Remove the kit from the front of the computer. See “Device in the flex bay” on page 62.
3. To remove the slim optical drive from the kit, do the following:
   a. Press the clip through the hole in the top of the kit as shown and push forward the slim optical drive. Then, remove the slim optical drive out of the kit.

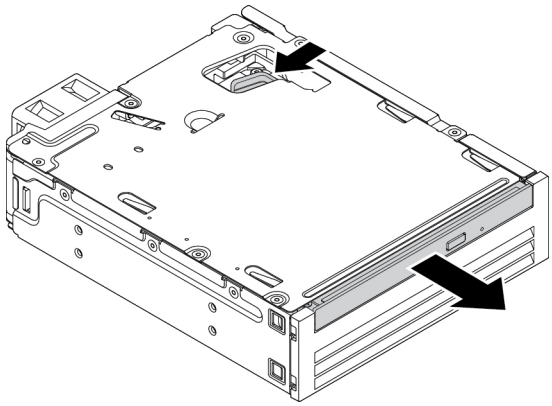

Figure 30. Removing the slim optical drive from the kit

   b. Detach the bracket as shown to remove it from the slim optical drive.

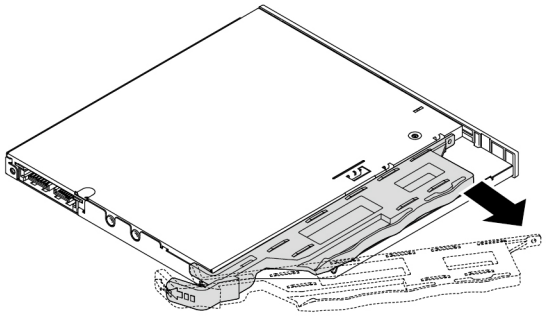

Figure 31. Removing the bracket from the slim optical drive

4. To install a new slim optical drive into the kit, do the following:

a. Align the three tabs on the bracket with the corresponding holes in the new slim optical drive. Then, install the bracket to the new slim optical drive.

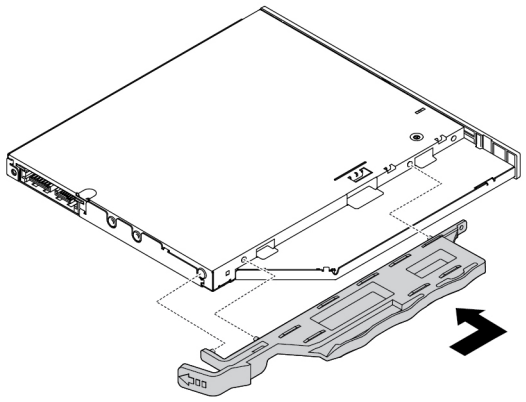

Figure 32. Installing the bracket to the new slim optical drive

b. Insert the new slim optical drive into the kit until you hear a click. The slim optical drive is secured in place.

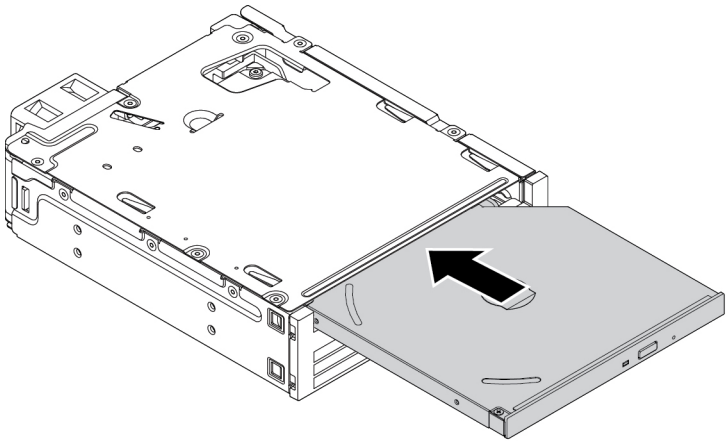

Figure 33. Installing the slim optical drive into the kit

5. Slide the kit into the flex bay and reconnect the cables.

What to do next:

- To work with another piece of hardware, go to the appropriate section.
- To complete the installation or replacement, go to “Completing the parts replacement” on page 134.

3.5-inch storage drive

To remove or install a 3.5-inch storage drive, do the following:

1. Prepare your computer. See “Preparing your computer and removing the computer cover” on page 59.
2. Ensure that all the cables are disconnected from the kit. Remove the kit from the front of the computer. See “Device in the flex bay” on page 62.

3. Press the clip as shown to open the rear cover of the kit.

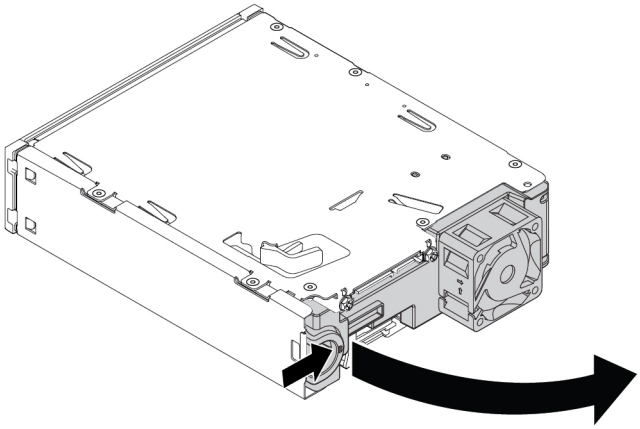

Figure 34. Opening the rear cover of the kit

4. Press both clips simultaneously toward each other and pull the conversion bracket out of the rear of the kit.

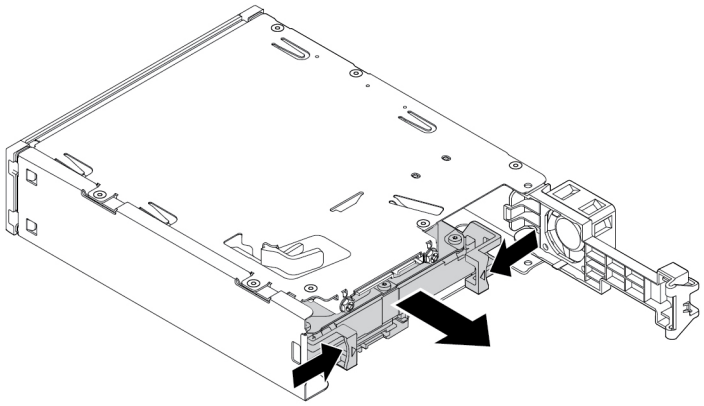

Figure 35. Removing the conversion bracket from the kit

5. Flex both sides of the conversion bracket and then remove the 3.5-inch storage drive out of the bracket. Do not touch the circuit board 1 on the drive.

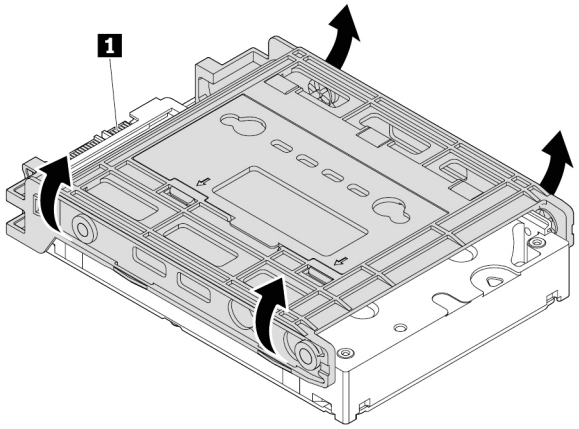

Figure 36. Removing the 3.5-inch storage drive from the conversion bracket

6. To install a 3.5-inch storage drive, ensure that the conversion bracket is unfolded. To unfold the bracket, do the following:
   a. Remove pins 1 and install them into slots 2.

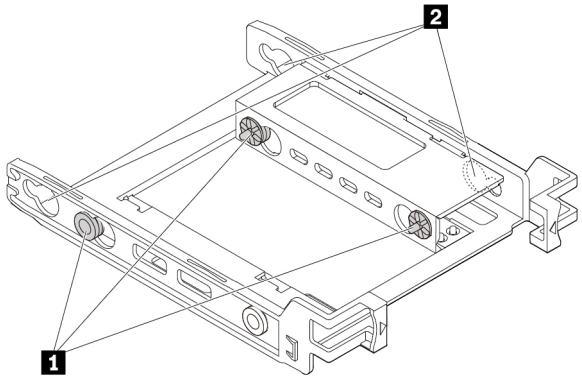

Figure 37. Removing pins and installing them into the new slots

b. Release tabs 1, 2, and 3 from the corresponding slots.

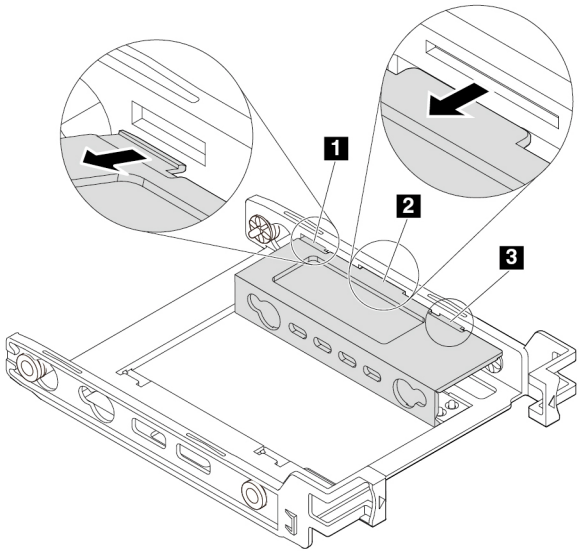

Figure 38. Releasing tabs from the corresponding slots

c. Unfold the bracket as shown.

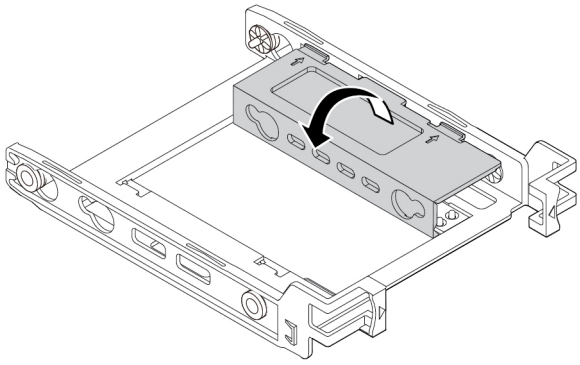

Figure 39. Unfolding the bracket

d. Insert tabs 1, 2, and 3 into the corresponding slots. Ensure that the tabs are secured in place.

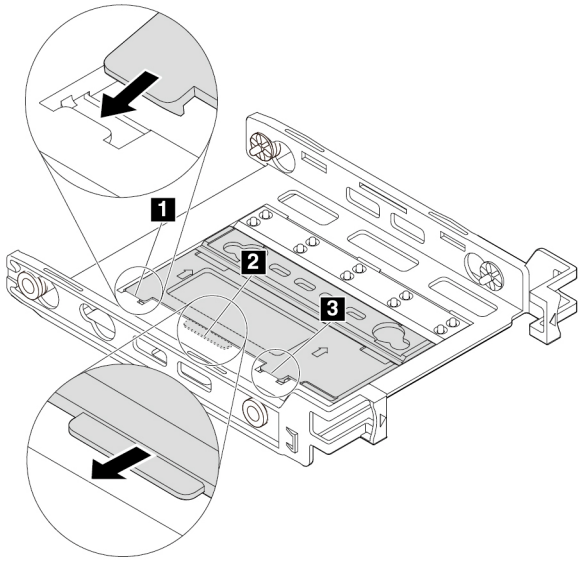

Figure 40. Inserting tabs into the corresponding slots

7. To install a 3.5-inch storage drive into the conversion bracket, do the following:
   a. Flex both sides of the bracket and align pins 1, 2, 3, and 4 on the bracket with the corresponding holes in the new 3.5-inch storage drive.
   b. Install the new 3.5-inch storage drive into the bracket. Do not touch the circuit board 5 on the drive.

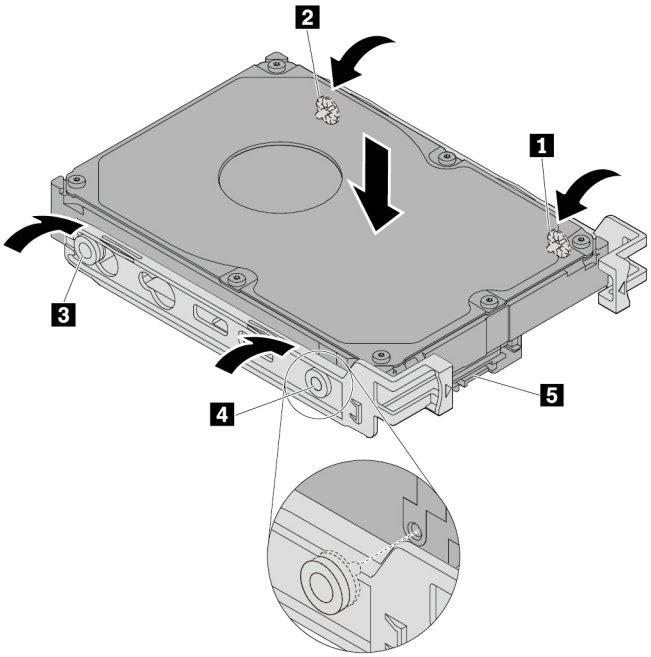

Figure 41. Installing the new 3.5-inch storage drive into the bracket

8. Slide the new 3.5-inch storage drive with bracket into the kit from the rear until the drive snaps into position.

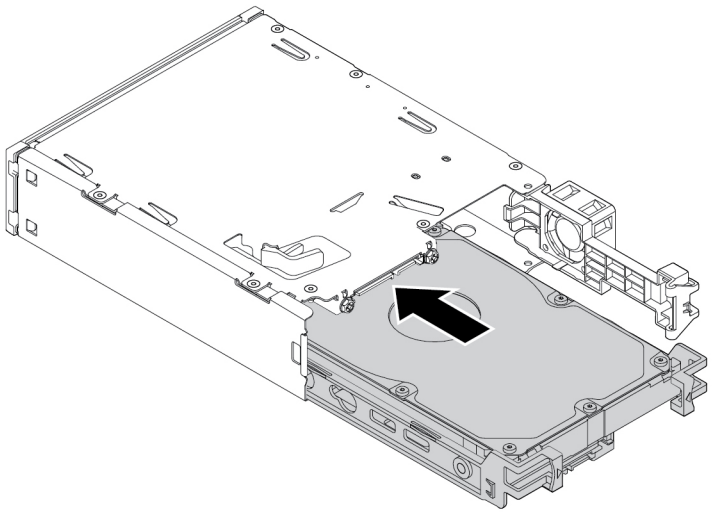

Figure 42. Installing the new 3.5-inch storage drive with bracket into the kit

9. Pivot the rear cover of the kit inward until you hear a click. Ensure that the rear cover is secured in place.

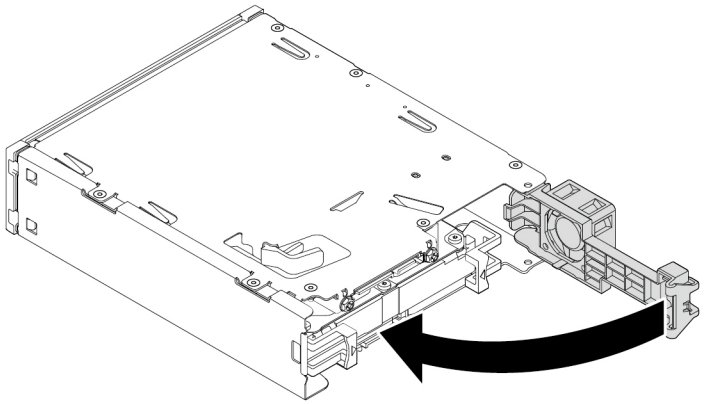

Figure 43. Pivoting the rear cover inward

10. Slide the kit into the flex bay and reconnect the cables.

What to do next:

- To work with another piece of hardware, go to the appropriate section.
- To complete the installation or replacement, go to “Completing the parts replacement” on page 134.

2.5-inch storage drive

To remove or install a 2.5-inch storage drive, do the following:

1. Prepare your computer. See “Preparing your computer and removing the computer cover” on page 59.
2. Ensure that all the cables are disconnected from the kit. Remove the kit from the front of the computer. See “Device in the flex bay” on page 62.

3. Press the clip as shown to open the rear cover of the kit.

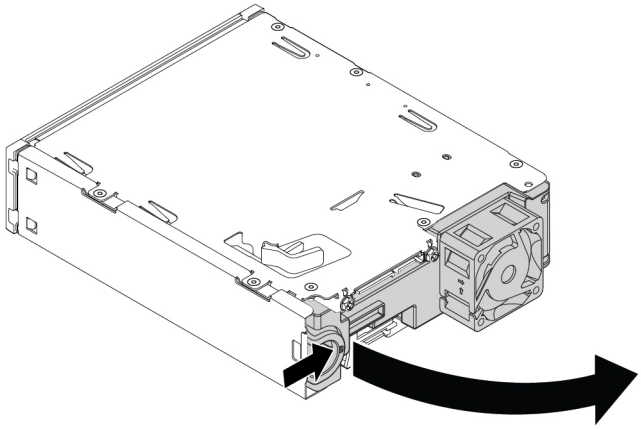

Figure 44. Opening the rear cover of the kit

4. Press both clips simultaneously toward each other and pull the conversion bracket out of the rear of the kit.

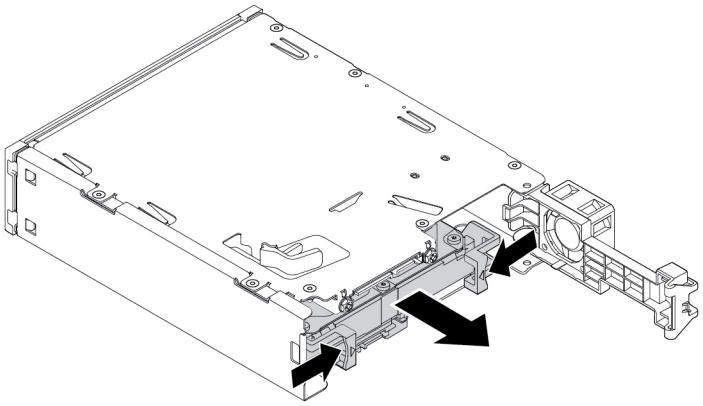

Figure 45. Removing the conversion bracket from the kit

5. To remove the 2.5-inch storage drive, flex both sides of the conversion bracket and then remove the drive out of the bracket. Do not touch the circuit board on the drive.

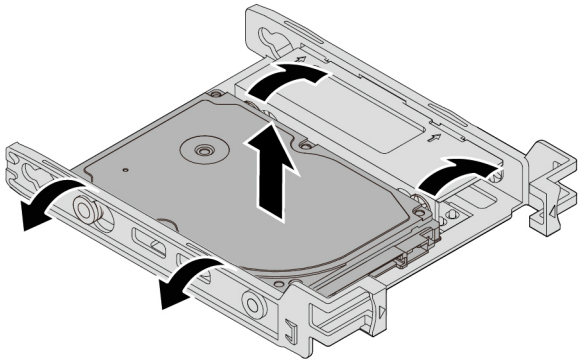

Figure 46. Removing the 2.5-inch storage drive from the bracket

6. To install a 2.5-inch storage drive, ensure that the conversion bracket is folded. To fold the bracket, do the following:
   a. Remove pins 1 and install them into slots 2.

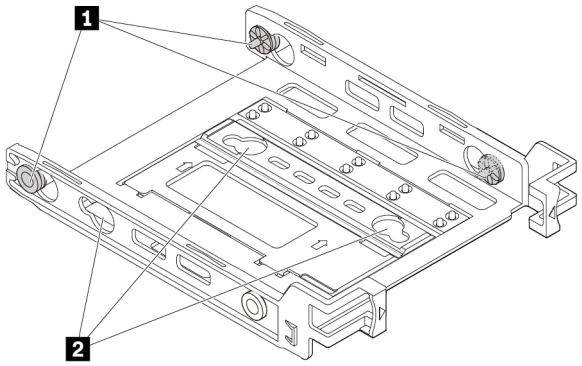

Figure 47. Removing pins and installing them into the new slots

   b. Pivot the bracket as shown to release tabs 1, 2, and 3 from the slots.

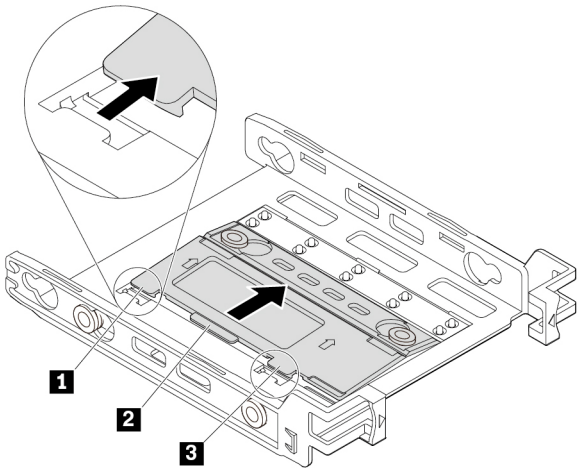

Figure 48. Pivoting the bracket

   c. Fold the bracket as shown.

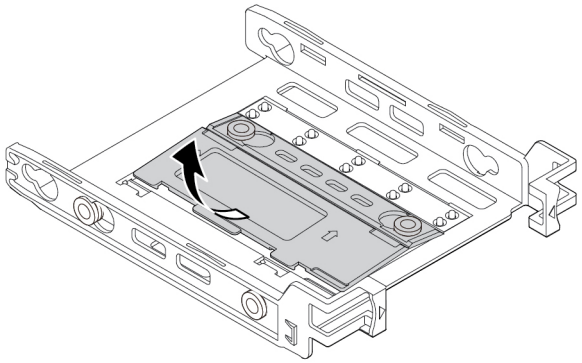

Figure 49. Folding the bracket

d. Insert tabs 1, 2, and 3 into the corresponding slots. Ensure that the tabs are secured in place.

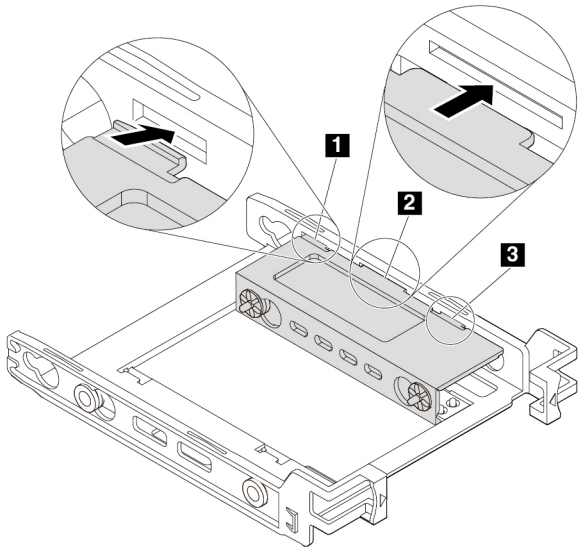

Figure 50. Inserting the tabs into the corresponding slots

7. To install a 2.5-inch storage drive into the conversion bracket, do the following:
   a. Flex both sides of the bracket and align pins 1, 2, 3, and 4 on the bracket with the corresponding holes in the new 2.5-inch storage drive.
   b. Install the new 2.5-inch storage drive into the bracket. Do not touch the circuit board 5 on the drive.

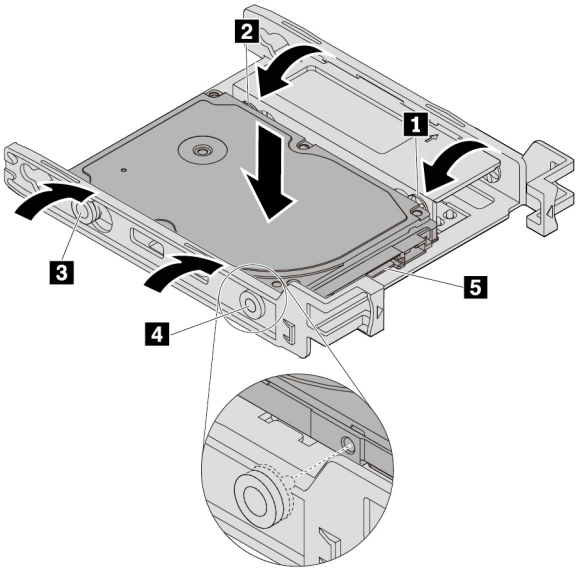

Figure 51. Installing the new 2.5-inch storage drive into the bracket

8. Slide the new 2.5-inch storage drive with bracket into the kit from the rear until the drive snaps into position.

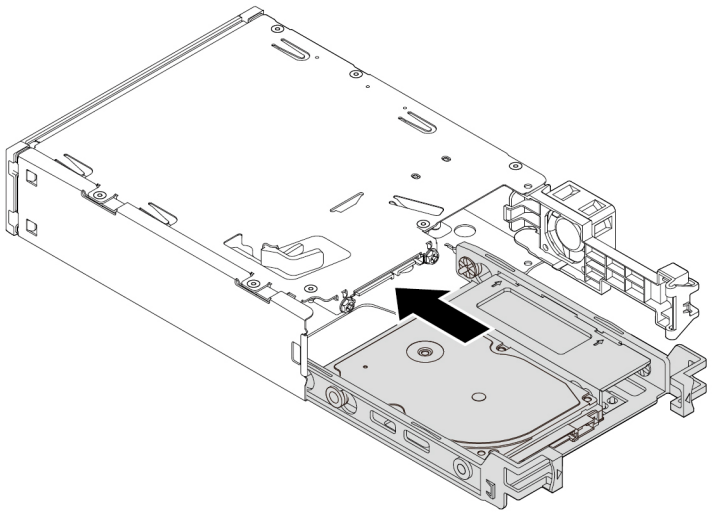

Figure 52. Installing the new 2.5-inch storage drive with bracket into the kit

9. Pivot the rear cover of the kit inward until you hear a click. Ensure that the rear cover is secured in place.

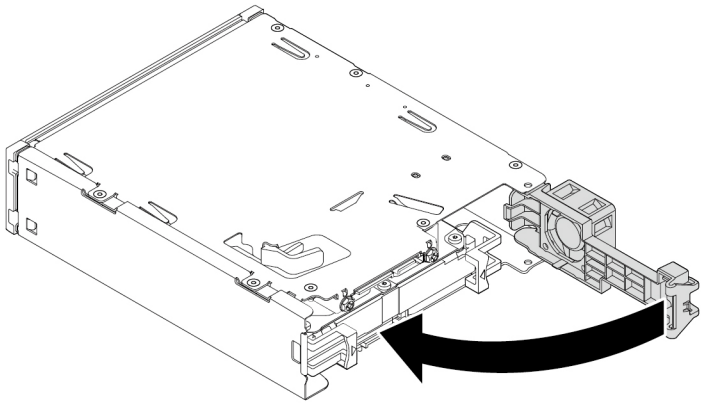

Figure 53. Pivoting the rear cover inward

10. Slide the kit into the flex bay and reconnect the cables.

What to do next:

- To work with another piece of hardware, go to the appropriate section.
- To complete the installation or replacement, go to “Completing the parts replacement” on page 134.

Cover presence switch

Attention: Do not open your computer or attempt any repair before reading and understanding the “Read this first: Important safety information” on page iii.

To remove or install the cover presence switch, do the following:

1. Prepare your computer. See “Preparing your computer and removing the computer cover” on page 59.
2. To remove the cover presence switch, do the following:

a. Locate the cover presence switch. See “Computer components” on page 7.
b. Disconnect the cover presence switch cable from the system board.
c. Slide the cover presence switch as shown to remove it from the computer chassis.

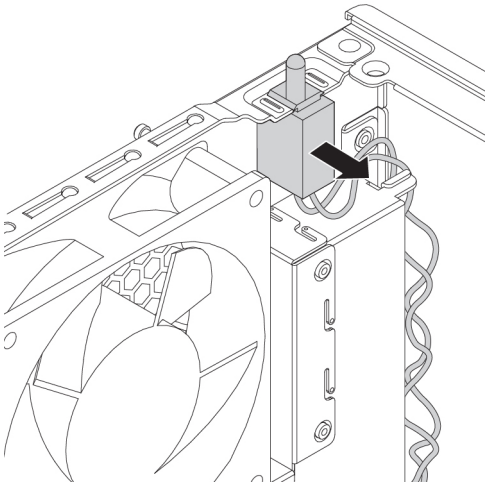

Figure 54. Removing the cover presence switch

3. To install a new cover presence switch, do the following:
   a. Align the two notches in the new cover presence switch with the two tabs on the computer chassis. Then, push the new cover presence switch inward until it is seated securely between the tabs.

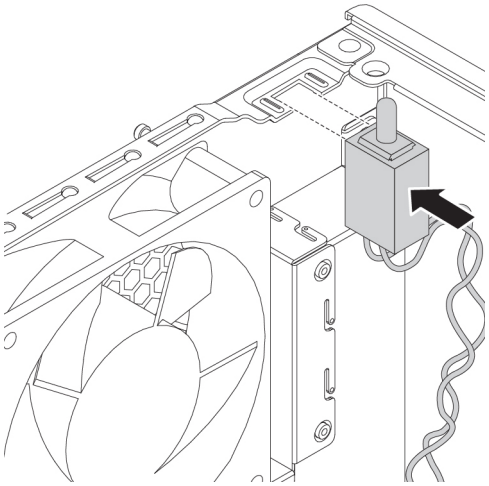

Figure 55. Installing the cover presence switch

   b. Connect the cable of the new cover presence switch to the cover presence switch connector on the system board. See “Parts on the system board” on page 8.

What to do next:

- To work with another piece of hardware, go to the appropriate section.
- To complete the installation or replacement, go to “Completing the parts replacement” on page 134.

Storage drive in a storage drive bay

Your computer supports 3.5-inch hard disk drive, 3.5-inch hybrid drive, 2.5-inch hard disk drive, or 2.5-inch solid-state drive.

3.5-inch storage drive

To remove or install a 3.5-inch storage drive, do the following:

1. Prepare your computer. See “Preparing your computer and removing the computer cover” on page 59.
2. Locate the storage drive bay. See “Internal storage drives” on page 10.
3. Ensure that all the cables are disconnected from the storage drive. Press both clips simultaneously toward each other and pull the conversion bracket out of the storage drive bay.

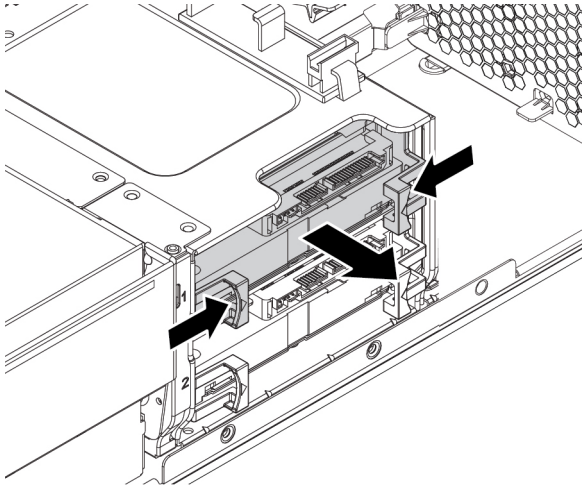

Figure 56. Removing the conversion bracket

4. Flex both sides of the conversion bracket to remove the 3.5-inch storage drive from the bracket. Do not touch the circuit board **1** on the drive.

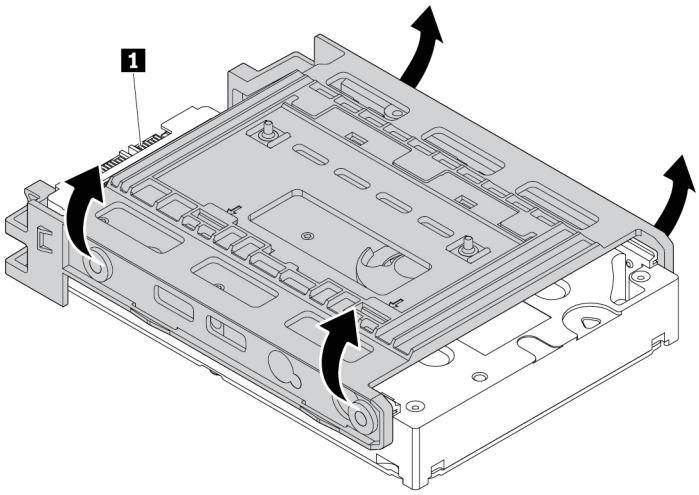

Figure 57. Removing the storage drive from the conversion bracket

5. To install a 3.5-inch storage drive, ensure that the conversion bracket is unfolded. To unfold the bracket, do the following:
   a. Remove the pin 1 and install it into the slot 2.

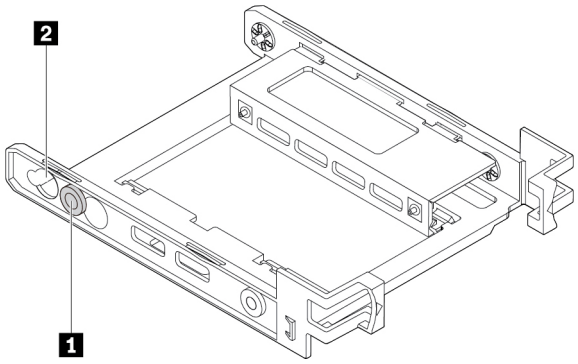

Figure 58. Removing the pin and installing it into the new slot

   b. Release tabs 1, 2, and 3 from the corresponding slots.

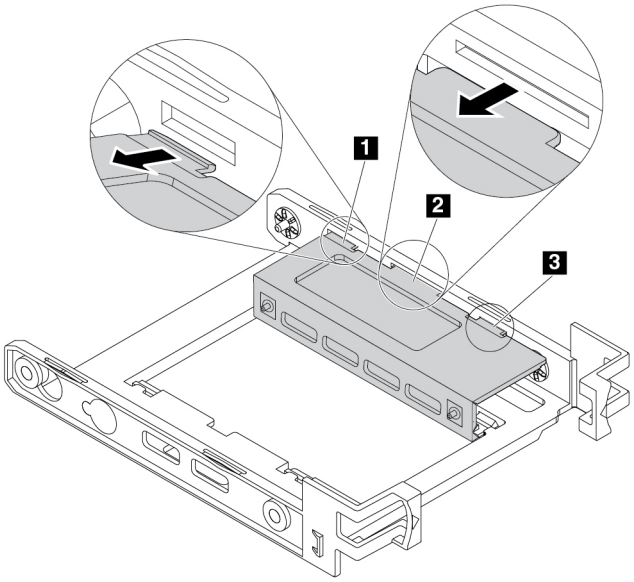

Figure 59. Releasing tabs from the corresponding slots

c. Unfold the bracket as shown.

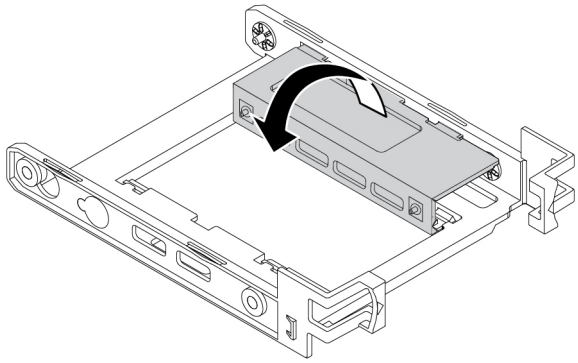

Figure 60. Unfolding the bracket

d. Insert tabs **1**, **2**, and **3** into the corresponding slots. Ensure that the tabs are secured in place.

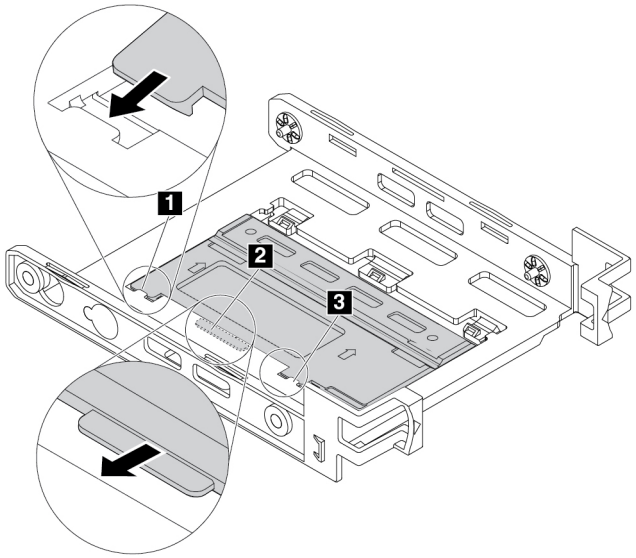

Figure 61. Inserting tabs into the corresponding slots

6. To install a 3.5-inch storage drive into the conversion bracket, do the following:
   a. Flex both sides of the bracket and align pins 1, 2, 3, and 4 on the bracket with the corresponding holes in the new 3.5-inch storage drive.
   b. Install the new 3.5-inch storage drive into the bracket. Do not touch the circuit board 5 on the drive.

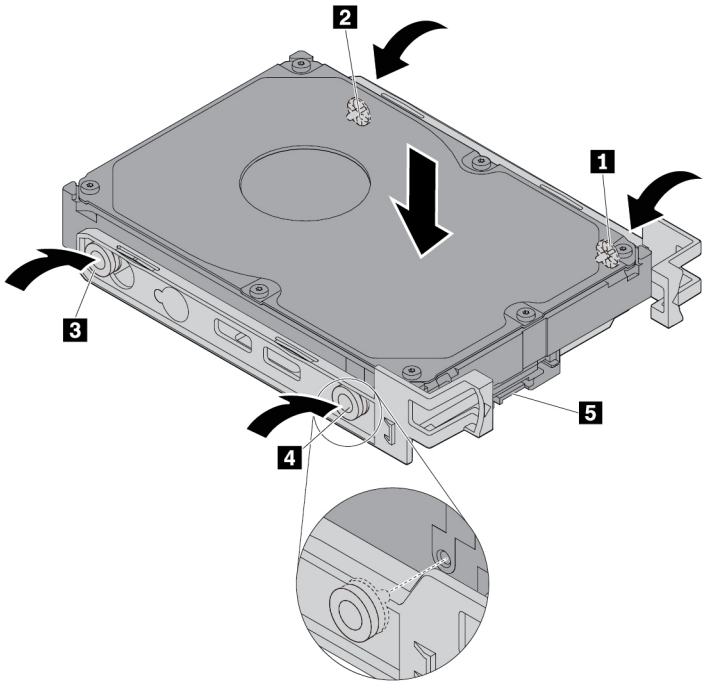

Figure 62. Installing the new 3.5-inch storage drive into the bracket

7. Ensure that the connectors on the storage drives are on the upper side. Then, slide the new 3.5-inch storage drive with the conversion bracket into the storage drive bay until the drive snaps into position.

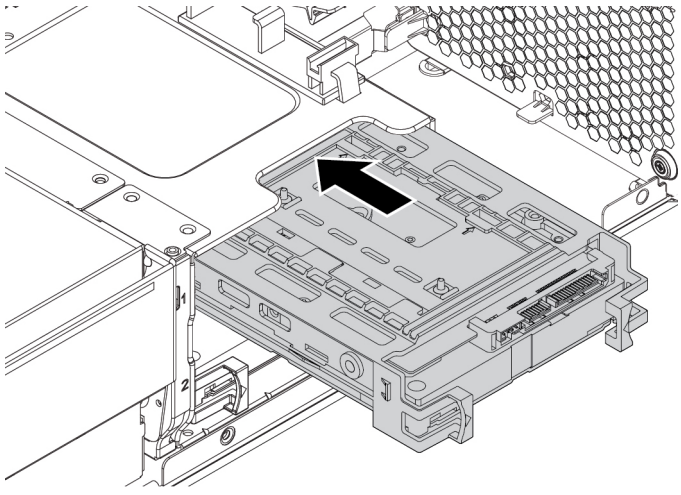

Figure 63. Installing the new 3.5-inch storage drive with bracket into the storage drive bay

8. Connect the signal cable and the power cable to the new storage drive.

What to do next:

- To work with another piece of hardware, go to the appropriate section.
- To complete the installation or replacement, go to “Completing the parts replacement” on page 134.

2.5-inch storage drive

To remove or install a 2.5-inch storage drive in a conversion bracket, do the following:

1. Prepare your computer. See “Preparing your computer and removing the computer cover” on page 59.
2. Locate the storage drive bay. See “Internal storage drives” on page 10.
3. Ensure that all the cables are disconnected from the storage drive. Press both clips simultaneously toward each other and pull the conversion bracket out of the storage drive bay.

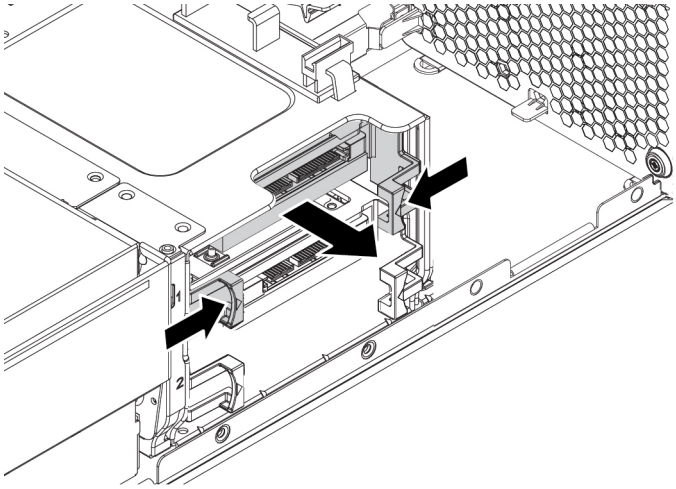

Figure 64. Removing the conversion bracket

4. Flex both sides of the conversion bracket to remove the 2.5-inch storage drive from the bracket.

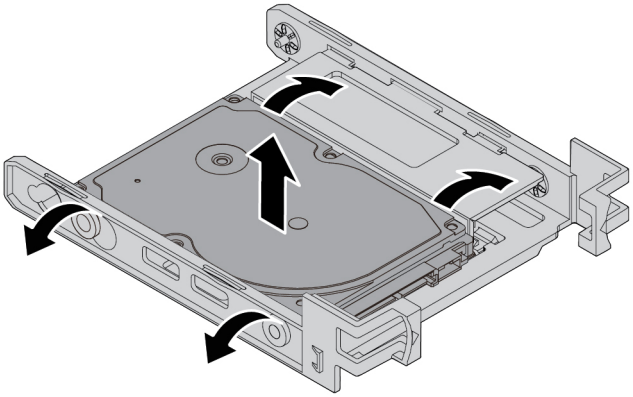

Figure 65. Removing the storage drive from the conversion bracket

5. To install a 2.5-inch storage drive, ensure that the conversion bracket is folded. To fold the bracket, do the following:

a. Remove the pin 1 and install it into the slot 2.

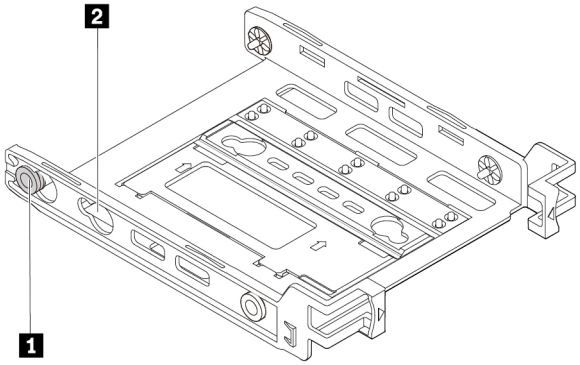

Figure 66. Removing the pin and installing it into the new slot

b. Pivot the bracket as shown to release tabs 1, 2, and 3 from the slots.

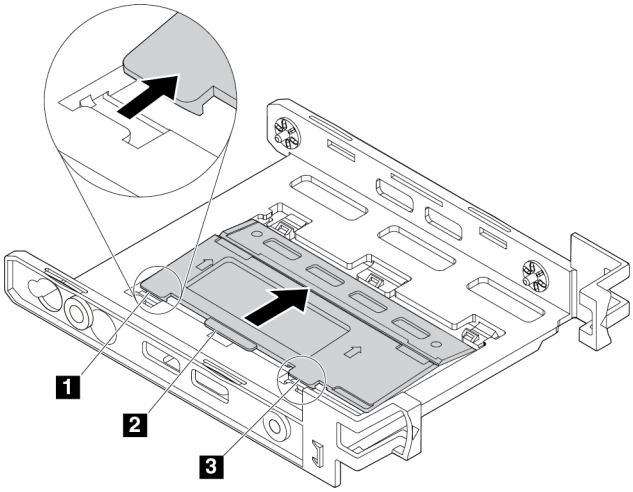

Figure 67. Pivoting the bracket

c. Fold the bracket as shown.

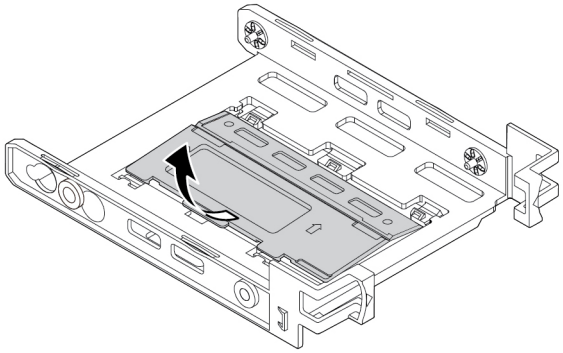

Figure 68. Folding the bracket

d. Insert tabs **1**, **2**, and **3** into the corresponding slots. Ensure that the tabs are secured in place.

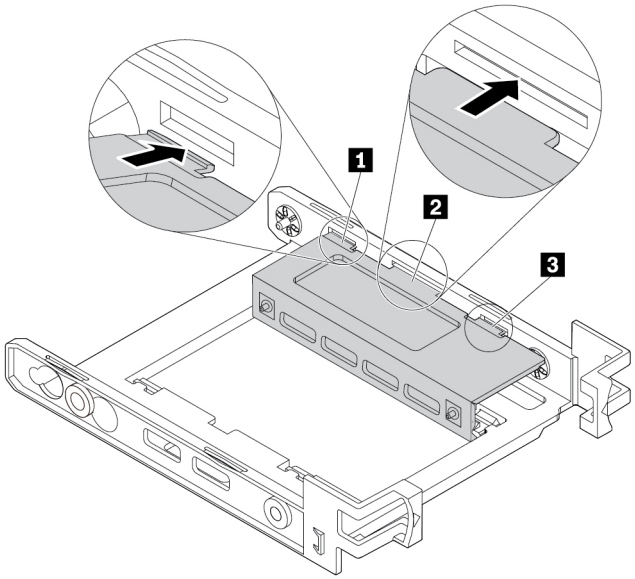

Figure 69. Inserting the tabs into the corresponding slots

6. To install a 2.5-inch storage drive into the conversion bracket, do the following:
   a. Flex both sides of the bracket and align pins 1, 2, 3, and 4 on the bracket with the corresponding holes in the new 2.5-inch storage drive.
   b. Install the new 2.5-inch storage drive into the bracket. Do not touch the circuit board on the drive.

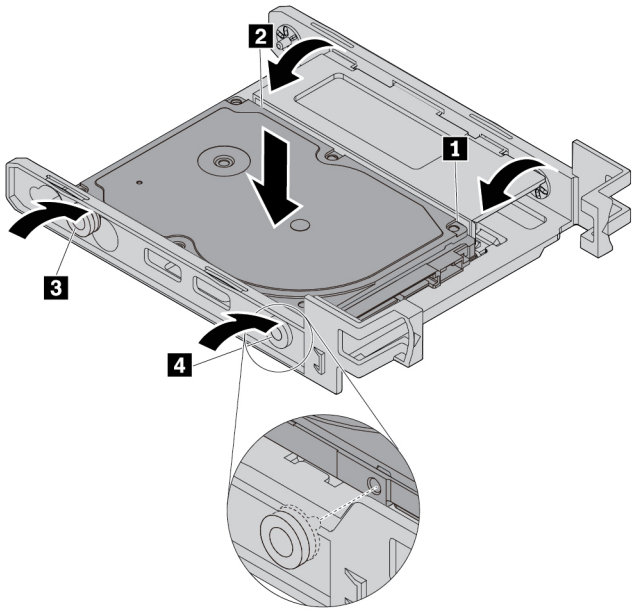

Figure 70. Installing the new 2.5-inch storage drive into the bracket

7. Ensure that the connectors on the storage drives are on the upper side. Slide the conversion bracket with the new 2.5-inch storage drive into the storage drive bay until it snaps into position.

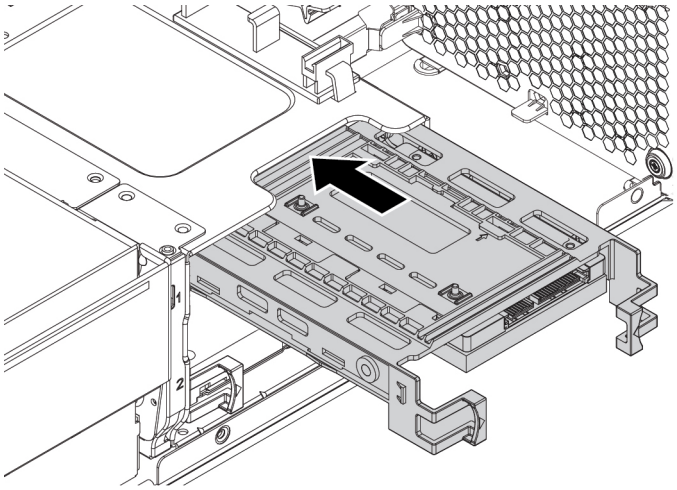

Figure 71. Installing the storage drive with conversion bracket into the storage drive bay

8. Connect the signal cable and the power cable to the new storage drive.

What to do next:

- To work with another piece of hardware, go to the appropriate section.
- To complete the installation or replacement, go to “Completing the parts replacement” on page 134.

Storage drive cage

Your computer might come with an optional storage drive cage. To remove or install the optional storage drive cage, do the following:

1. Prepare your computer. See “Preparing your computer and removing the computer cover” on page 59.
2. Remove the front fan assembly. See “Front fan assembly” on page 121.
3. Locate the storage drive cage. See “Computer components” on page 7.
4. Ensure that all the cables are disconnected from the storage drives. Slide the storage drives out of the chassis. See “Storage drive in a storage drive bay” on page 85.
5. To remove the storage drive cage, do the following:
   a. Remove the three screws that secure the storage drive cage.

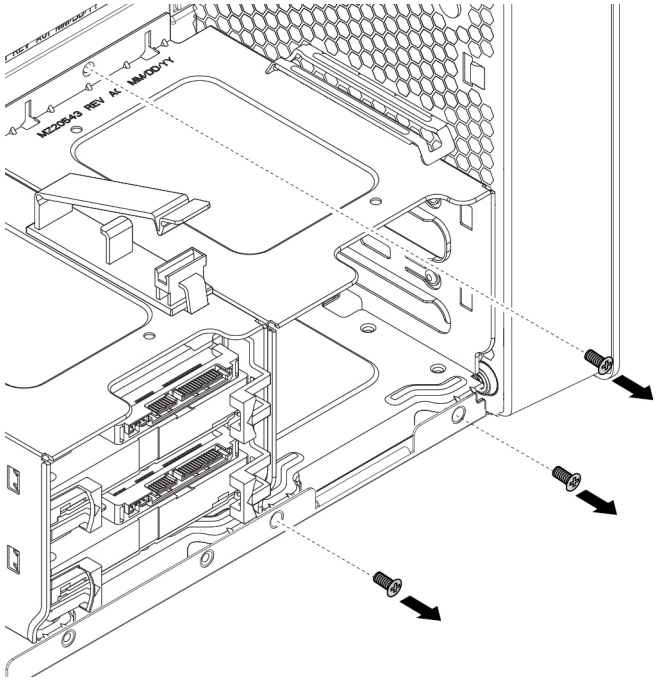

Figure 72. Removing the screws

b. Pull the storage drive cage upward. Then gently slide the storage drive cage out of the chassis.

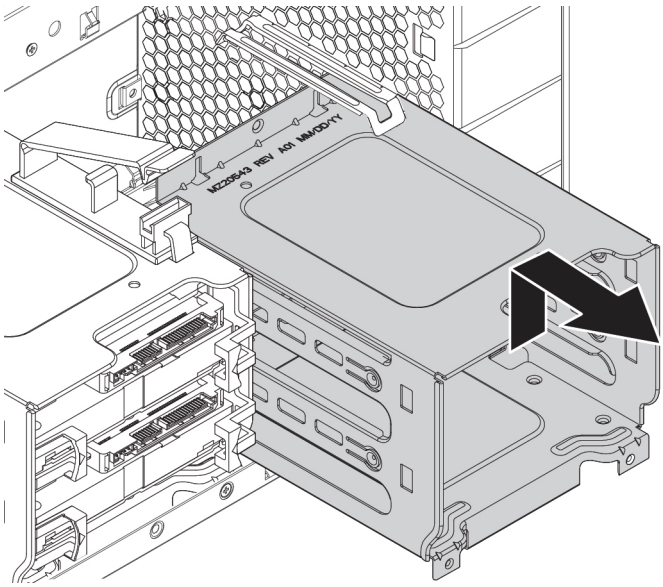

Figure 73. Removing the storage drive cage

6. To install a storage drive cage, do the following:
   a. Place the upper edge of the storage drive cage under the front-fan-assembly retainer as shown.

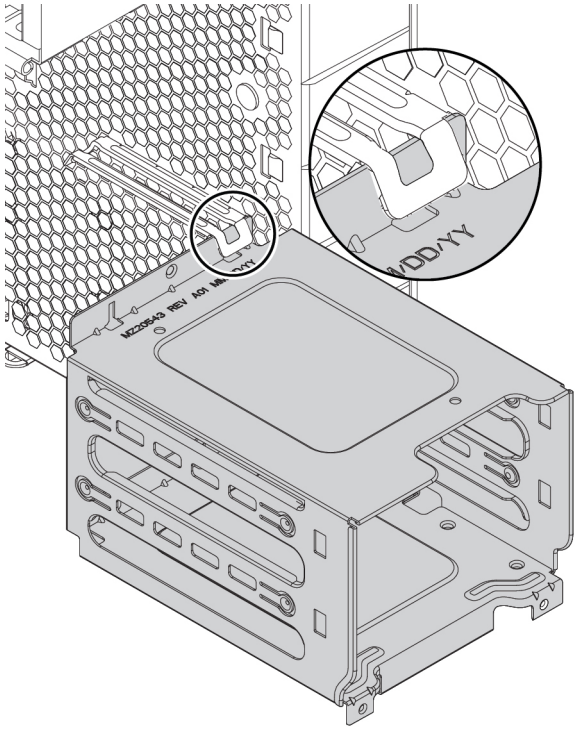

Figure 74. Placing the upper edge of the storage drive cage under the retainer

b. Gently push the storage drive cage inward until it cannot be pushed any further. Then press the drive cage downward.

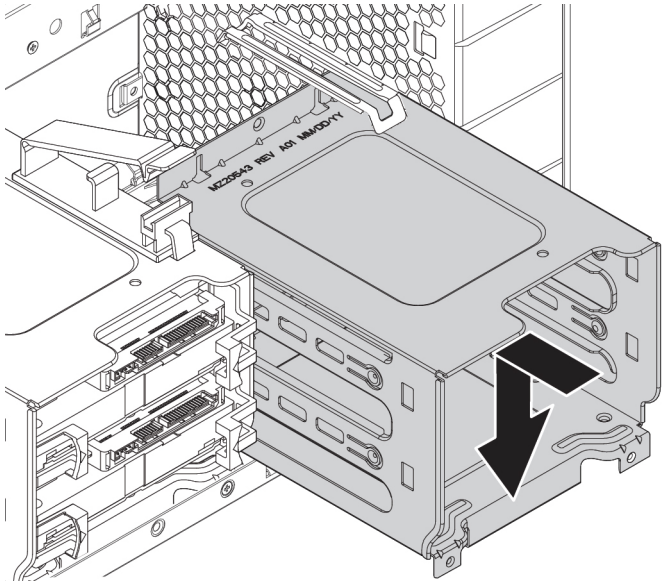

Figure 75. Installing the storage drive cage

c. Ensure that the retaining latches on the chassis snap in position. Then install the three screws into the aligned screw holes to secure the storage drive cage.

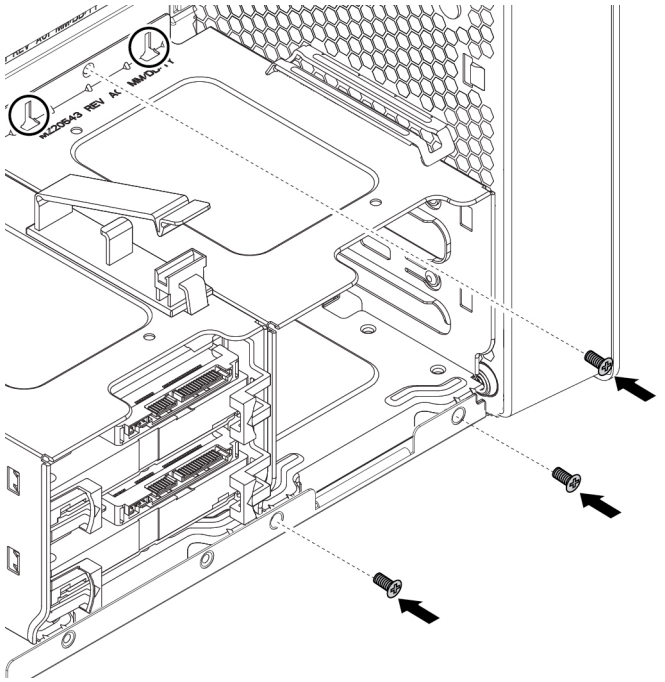

Figure 76. Securing the storage drive cage with three screws

7. Slide the storage drives into the storage drive cage. Reconnect the removed cables to the storage drives. See “Storage drive in a storage drive bay” on page 85.
8. Reinstall the front fan assembly.

What to do next:

- To work with another piece of hardware, go to the appropriate section.
- To complete the installation or replacement, go to “Completing the parts replacement” on page 134.

M.2 solid-state drive

Attention: Do not open your computer or attempt any repair before reading and understanding the “Read this first: Important safety information” on page iii.

An M.2 solid-state drive can be installed in the storage drive bracket, on the system board or on an M.2 solid-state drive PCIe adapter. The instructions on how to install or replace a M.2 solid-state drive also apply to the Intel Optane memory. Before replacing the Intel Optane memory, ensure that you disable the Intel Optane memory from the Intel Rapid Storage Technology (Intel RST) Console. Otherwise, all data on the storage drive will be lost.

M.2 solid-state drive in the storage drive bracket

To remove or install an M.2 solid-state drive, do the following:

1. Prepare your computer. See “Preparing your computer and removing the computer cover” on page 59.
2. To remove the failing M.2 solid-state drive, do the following:

a. Unlock the M.2 solid-state drive carrier with the provided key as shown. Store the key in a secure place for later use. Press the eject button to eject the carrier from the storage drive bracket. Then, grasp the M.2 solid-state drive carrier by its edge and gently pull it out of the bracket.

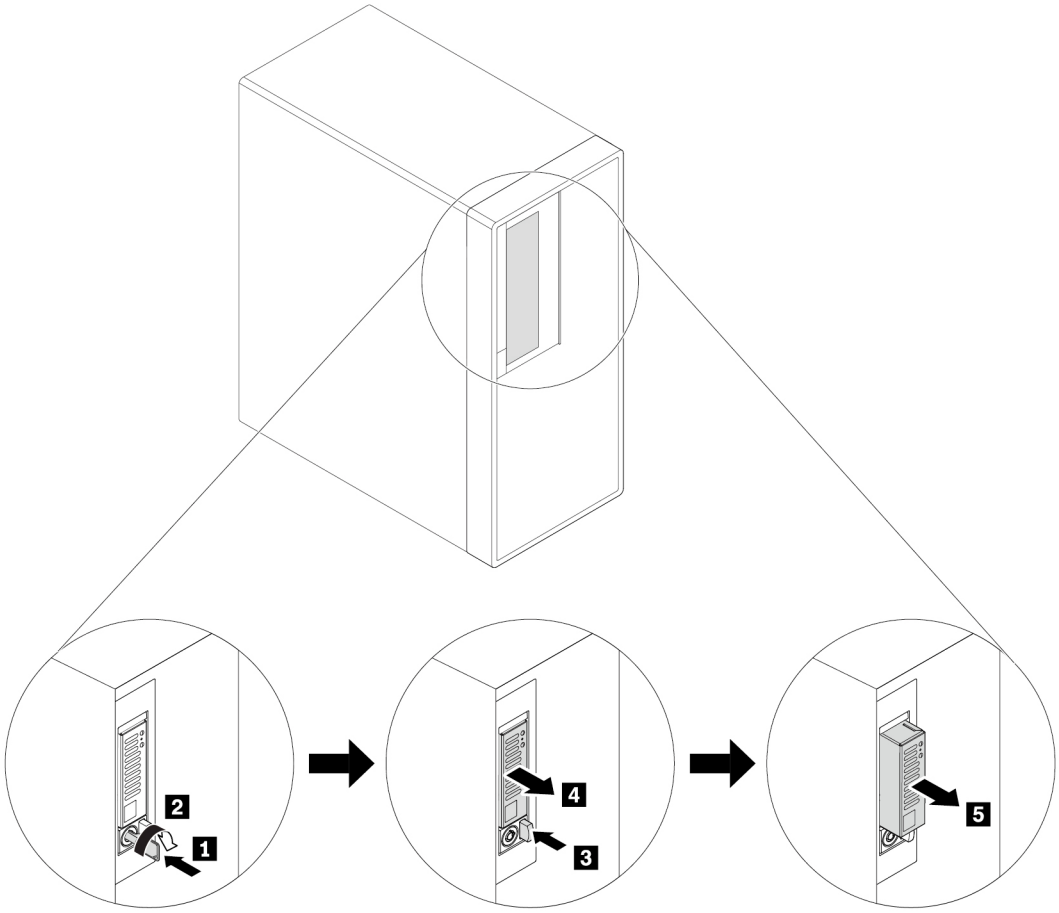

Figure 77. Removing the M.2 solid-state drive carrier

b. Remove two screws and slide the cover as shown to remove the cover from the carrier.

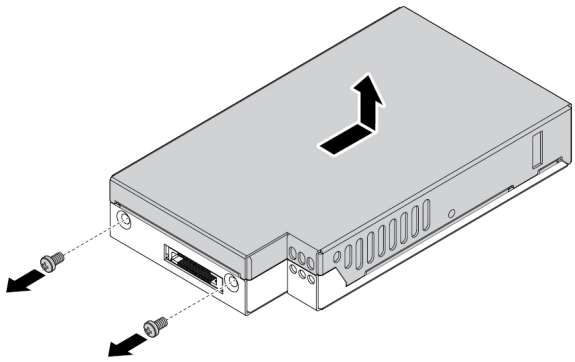

Figure 78. Removing the cover of the M.2 solid-state drive carrier

c. Loosen the screw that secures the M.2 solid-state drive. Then, remove the M.2 solid-state drive out of the slot at an angle of about 20 degrees.

Note: Do not touch the circuit board of the M.2 solid-state drive.

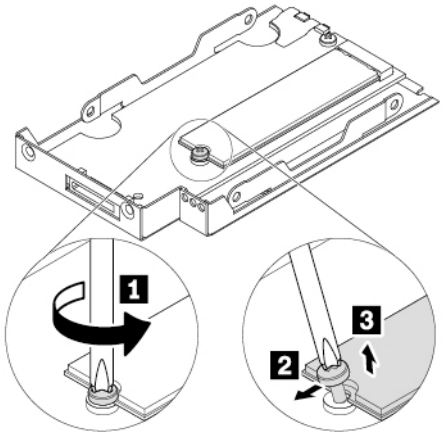

Figure 79. Removing the M.2 solid-state drive

3. To install the M.2 solid-state drive, do the following:
   a. Insert the new M.2 solid-state drive into the slot at an angle of about 20 degrees. Pivot the M.2 solid-state drive downward. Then, tighten the screw to secure the M.2 solid-state drive.

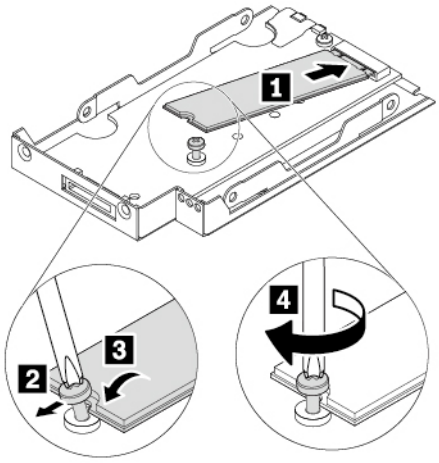

Figure 80. Installing the M.2 solid-state drive

b. Reinstall the cover of the carrier as shown and reinstall the screws to secure the cover.

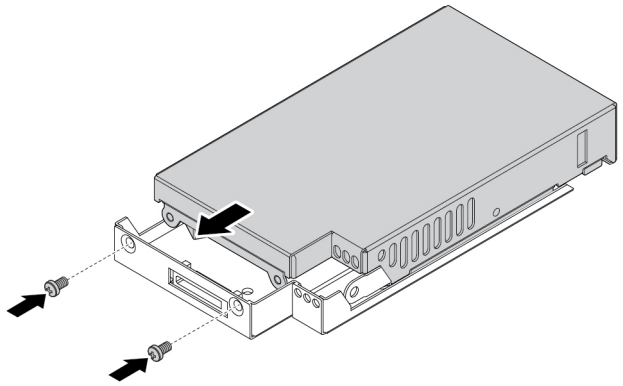

Figure 81. Installing the cover of the M.2 solid-state drive carrier

c. Reinstall the carrier into the bracket as shown until it snaps in to position. Lock the carrier with the key. Always store the key in a secure place.

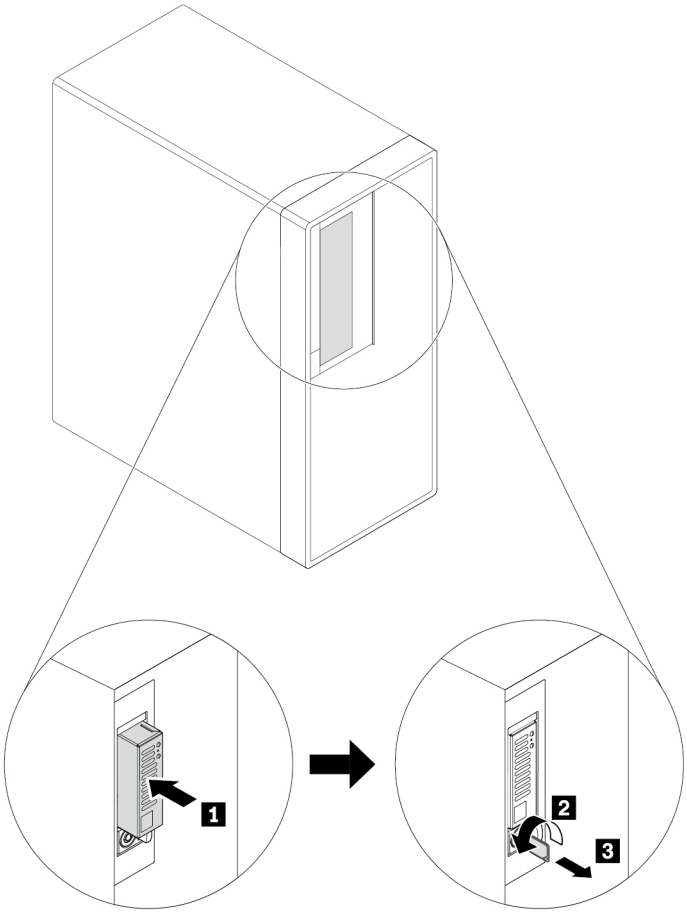

Figure 82. Reinstalling the M.2 solid-state drive carrier

M.2 solid-state drive on the system board

To remove or install an M.2 solid-state drive on the system board, do the following:

1. Prepare your computer. See “Preparing your computer and removing the computer cover” on page 59.
2. Lay the computer on its side for easier access to the M.2 solid-state drive slots.
3. Locate the M.2 solid-state drive. See “Computer components” on page 7.
4. Turn the mounting stud 90-degree counterclockwise to release the heat sink. Then, remove the heat sink from the system board.

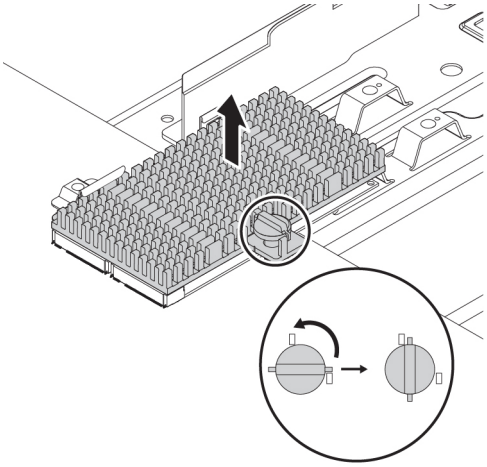

Figure 83. Removing the heat sink

5. To remove the M.2 solid-state drive, do the following:
   a. Loosen the screw that secures the M.2 solid-state drive **1**.
   b. Remove the M.2 solid-state drive with the screw holder from the M.2 solid-state drive slot **2**.
   c. Remove the screw holder from the M.2 solid-state drive **3**.

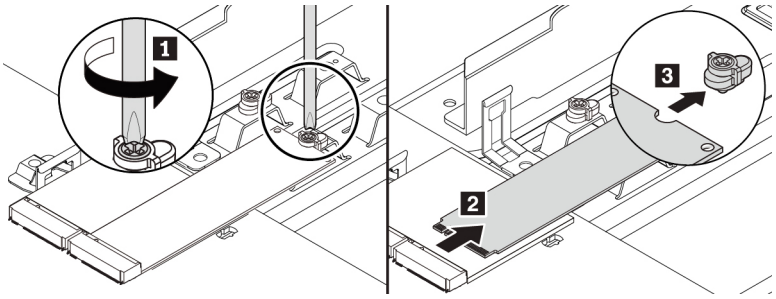

Figure 84. Removing the M.2 solid-state drive

6. To install an M.2 solid-state drive, do the following:

a. If necessary, remove the film that protects the thermal pad. Align the notch 1 in the screw holder with the corresponding notch 2 in the M.2 solid-state drive. Insert the screw holder onto the new M.2 solid-state drive as shown.

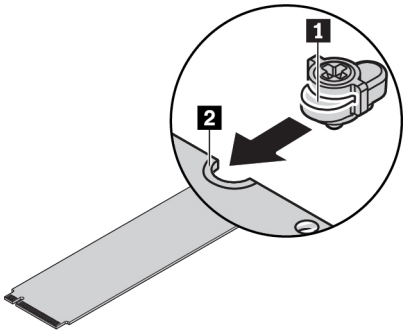

Figure 85. Inserting the screw holder onto the M.2 solid-state drive

b. Hold the new drive by its edges and ensure that the circuit board side is facing upward. Align the notch 1 in the new drive with the slot key 2 in the M.2 slot. Insert the drive into the corresponding slot at an angle of about 20 degrees until it is firmly secured. Pivot the M.2 solid-state drive downward.

Notes:

- Do not touch the circuit board of the M.2 solid-state drive.
- If only one M.2 solid-state drive is installed, ensure that the drive is installed in the M.2 solid-state drive slot 1 (21). See “Parts on the system board” on page 8.

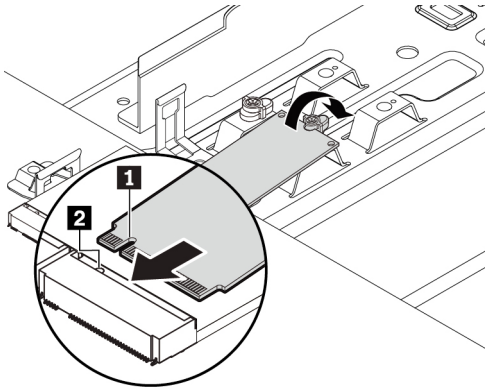

Figure 86. Installing the M.2 solid-state drive

c. Tighten the screw to secure the new M.2 solid-state drive.

Note: Do not overtighten the screw.

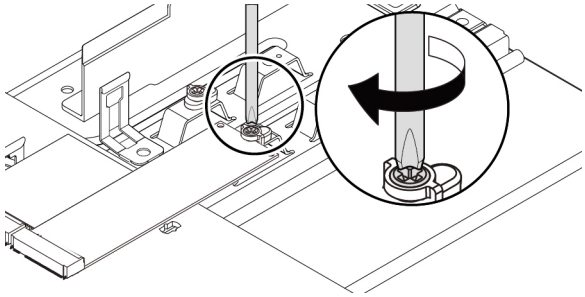

Figure 87. Securing the M.2 solid-state drive

d. If necessary, remove the film that protects the thermal pad on the heat sink. Insert the two hooks on the heat sink into the corresponding holes as shown 1. Then, press the heat sink downward 2. Ensure that the mounting stud on the heat sink is aligned with the hole in the system board.

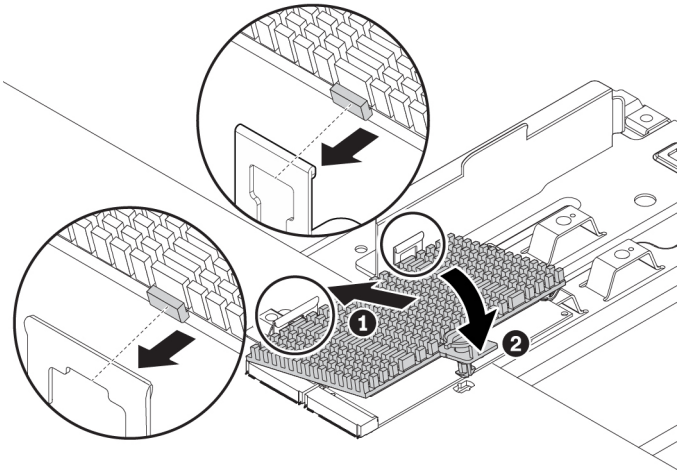

Figure 88. Installing the heat sink onto the system board

e. Press the mounting stud downward and turn the mounting stud 90-degree clockwise to secure the heat sink to the system board.

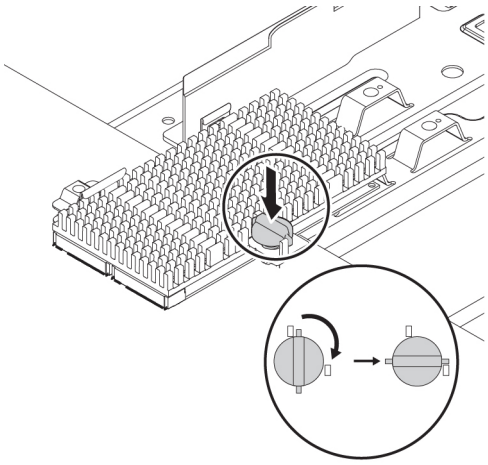

Figure 89. Securing the heat sink to the system board

What to do next:

- To work with another piece of hardware, go to the appropriate section.
- To complete the installation or replacement, go to “Completing the parts replacement” on page 134.

M.2 solid-state drive in an M.2 solid-state drive PCIe adapter

Install M.2 solid-state drives in the alphabetic order as shown.

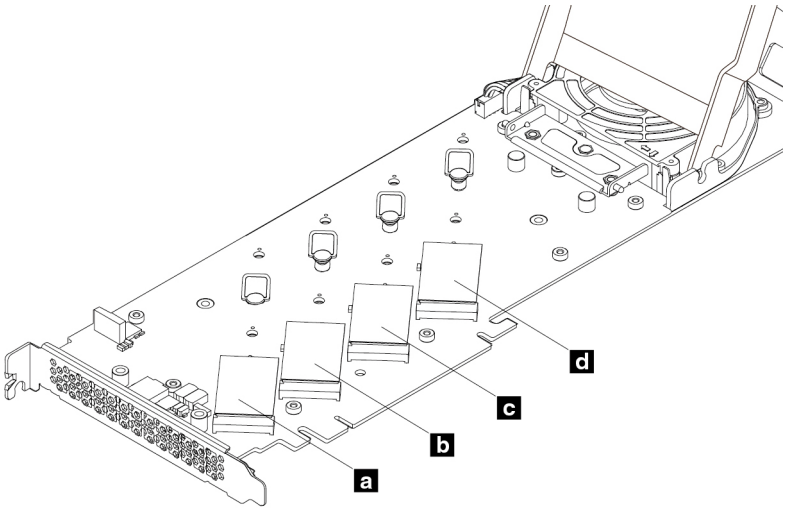

Figure 90. M.2 solid-state drive installation order

To remove or install an M.2 solid-state drive in the M.2 solid-state drive PCIe adapter, do the following:

1. Remove the M.2 solid-state drive PCIe adapter from the PCIe card slot. See “Full-length PCIe card” on page 115.

2. Slide the cover latches to the open position. Then, pivot the cover as shown until it stops.

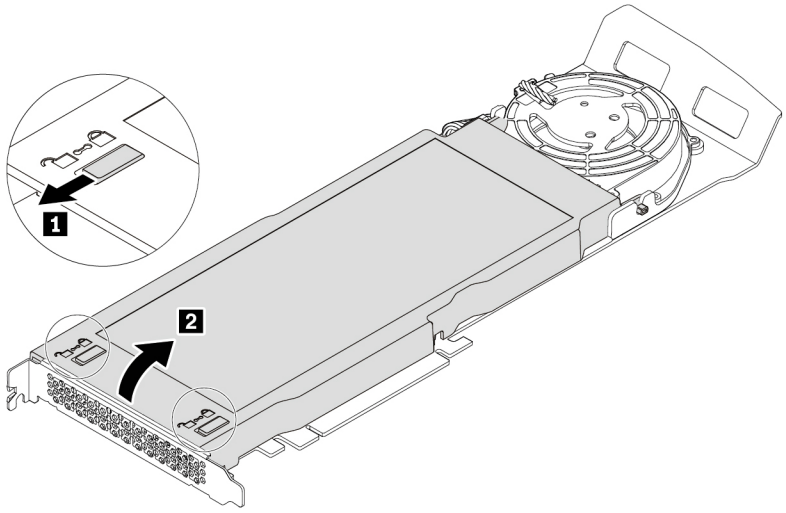

Figure 91. Opening the cover

3. Loosen the screws that secure the M.2 solid-state drive heat sink. Then, remove the heat sink as shown.

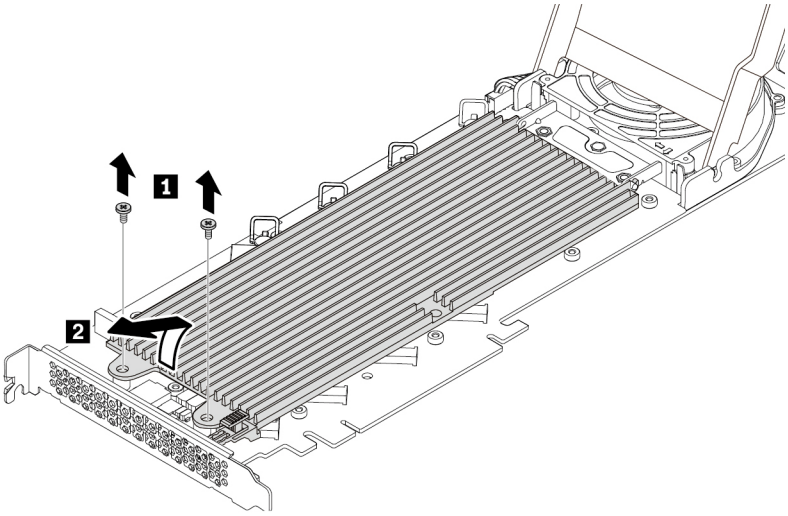

Figure 92. Removing the heat sink

4. To remove the M.2 solid-state drive, pull the handle of the retention latch outward to release the M.2 solid-state drive. Then, remove the M.2 solid-state drive from the PCIe adapter.

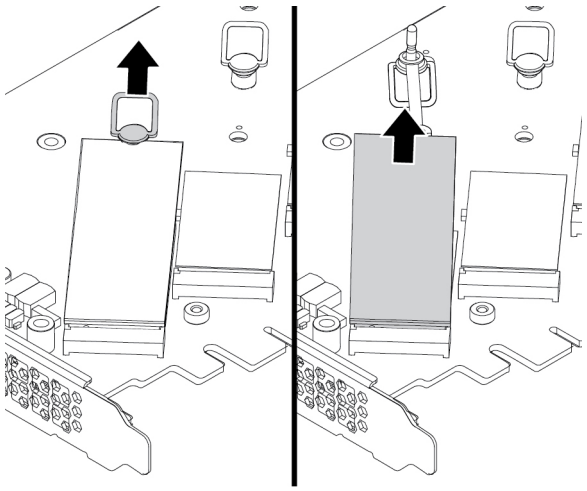

Figure 93. Removing the M.2 solid-state drive

5. To install an M.2 solid-state drive, do the following:
   a. If necessary, move the retention latch to an appropriate location to suit the length of the new M.2 solid-state drive.

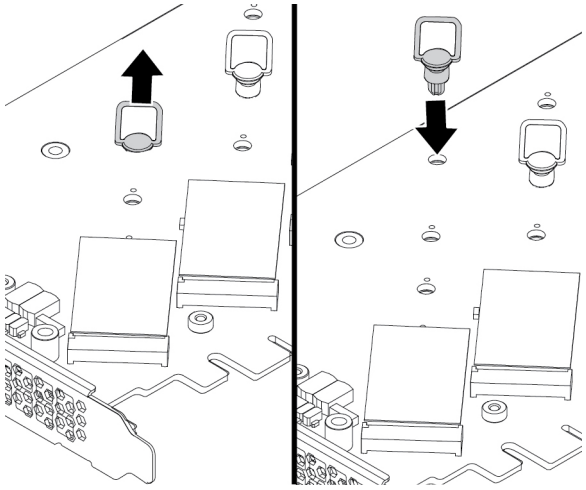

Figure 94. Adjusting the location of the retention latch on the PCIe adapter

   b. If necessary, remove the film on the thermal pad on which you want to install the M.2 solid-state drive.

c. Pull the handle of the retention latch outward to the open position.

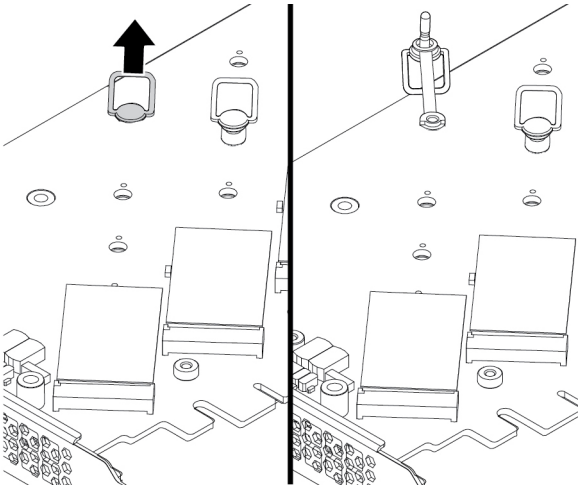

Figure 95. Opening the retention latch

d. Hold the new M.2 solid-state drive by its edges and ensure that the circuit board side is facing upward. Align the notch in the new M.2 solid-state drive with the slot key in the M.2 slot. Insert the drive into the corresponding slot on the PCIe adapter until it is firmly seated. Then, insert the plug of the retention latch into the hole to secure the new drive.

Note: Do not touch the circuit board of the M.2 solid-state drive.

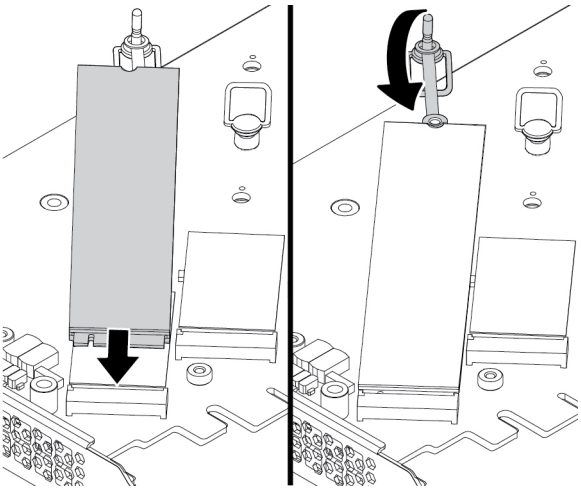

Figure 96. Installing the M.2 solid-state drive

6. Install the heat sink as shown. Then tighten the screws to secure the heat sink.

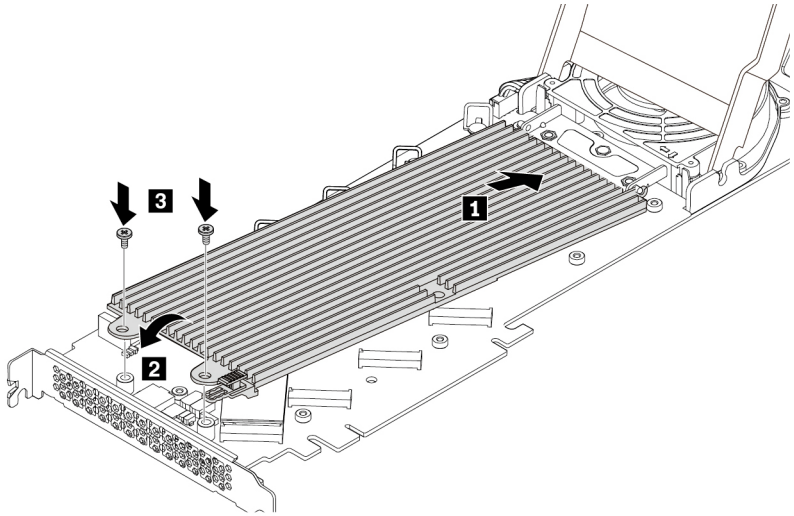

Figure 97. Installing the heat sink onto the PCIe adapter

7. Install the cover as shown. Then, slide the cover latches to the locked position.

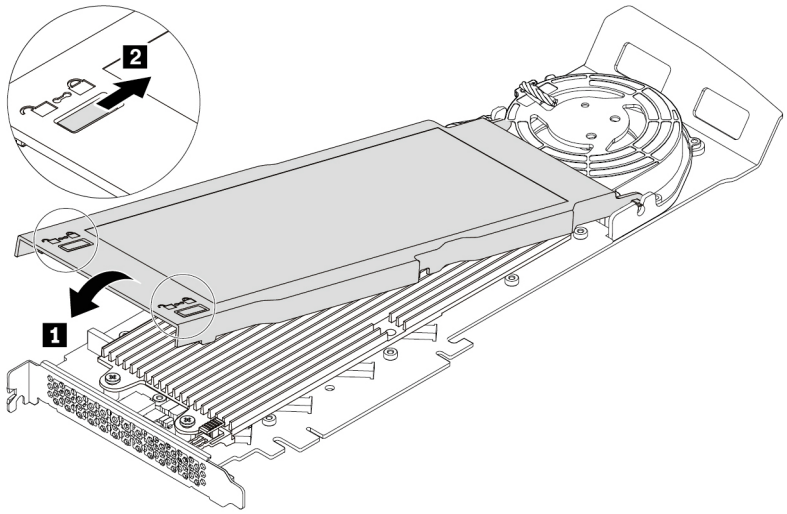

Figure 98. Closing the cover

8. Install the M.2 solid-state drive PCIe adapter in a PCIe x16 card slot on the system board. See “Parts on the system board” on page 8 and “Full-length PCIe card” on page 115.

What to do next:

- To work with another piece of hardware, go to the appropriate section.
- To complete the installation or replacement, go to “Completing the parts replacement” on page 134.

Power supply assembly

Attention: Do not open your computer or attempt any repair before reading and understanding the “Read this first: Important safety information” on page iii.

Although there are no moving parts in your computer after the power cord has been disconnected, the following warnings are required for your safety.

CAUTION:

Keep fingers and other parts of your body away from hazardous, moving parts. If you suffer an injury, seek medical care immediately.

DANGER

Disconnect all power cords from electrical outlets before removing the computer cover or any part that has the above label attached.

DO NOT disassemble components that have the above label attached. There are no serviceable parts inside these components.

Your product is designed for safe use. However, hazardous voltage, current, and energy levels are present inside any component that has this label attached. Disassembling of these components might cause fire or might even result in death. If you suspect a problem with one of these parts, contact a service technician.

To remove or install the power supply assembly, do the following:

1. Prepare your computer. See “Preparing your computer and removing the computer cover” on page 59.
2. To remove the power supply, pull the handle on the power supply assembly and pivot it downward as shown. Then, pull the entire power supply assembly out of the chassis.

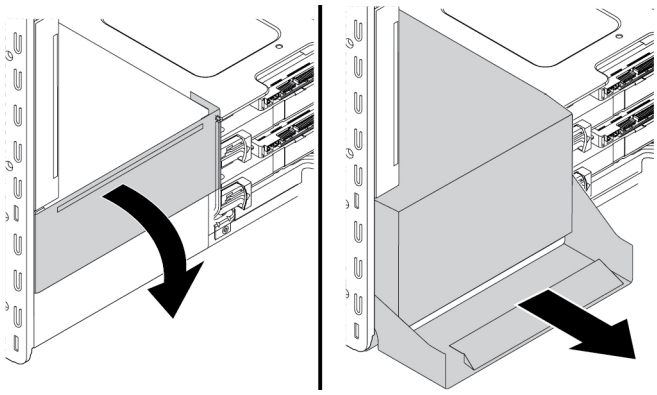

Figure 99. Removing the power supply assembly

3. Ensure that the new power supply assembly is the correct replacement.

4. To install a new power supply, insert the new power supply assembly with the handle open into the chassis. Then, pivot the handle as shown to fully install the new power supply assembly into position.

   Note: When pivoting the handle to the closed position, push hard if you feel resistance.

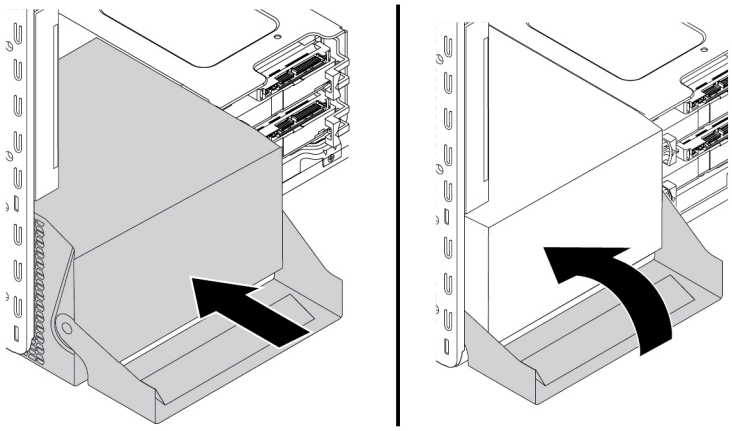

Figure 100. Installing the power supply assembly

What to do next:

- To work with another piece of hardware, go to the appropriate section.
- To complete the installation or replacement, go to “Completing the parts replacement” on page 134.

PCIe card

Attention: Do not open your computer or attempt any repair before reading and understanding the “Read this first: Important safety information” on page iii.

Your computer comes with the following combinations: one standard PCI card slot, two PCIe 3.0 x4 card slots, one PCIe 3.0 x8 card slot, and two PCIe 3.0 x16 card slots.

Install PCIe cards according to the corresponding slot types and the following illustrated installation order:

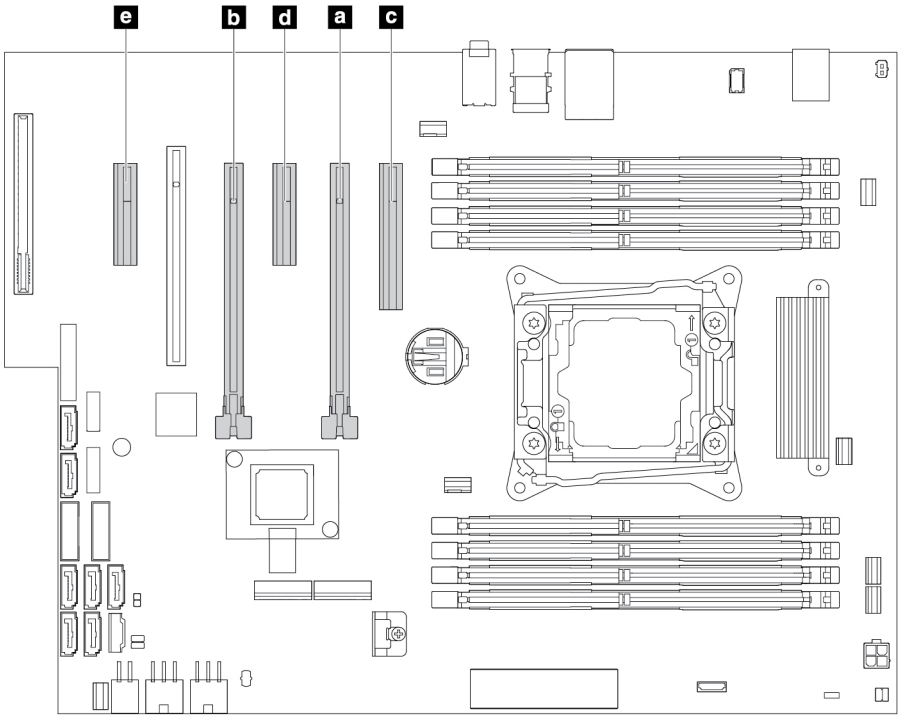

Figure 101. PCIe card installation order

Notes:

- The instructions on how to remove or install a PCIe card also applies to the PCI card.
- If your computer comes with a full-length PCIe card, refer to “Full-length PCIe card” on page 115 for its replacement instructions.

To remove or install a PCIe card, do the following:

1. Prepare your computer. See “Preparing your computer and removing the computer cover” on page 59.
2. Lay the computer on its side for easier access to the system board.

3. To remove a PCIe card retainer, pull and pivot the tab on the front fan assembly as shown to open the latch inside.

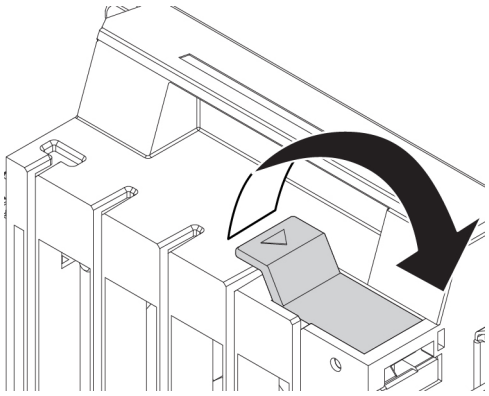

Figure 102. Opening the latch in the front fan assembly

Gently pull the PCIe card retainer out of the slot in the front fan assembly and then remove the card retainer from the PCIe card latch.

Note: The PCIe card retainer is only available on some models.

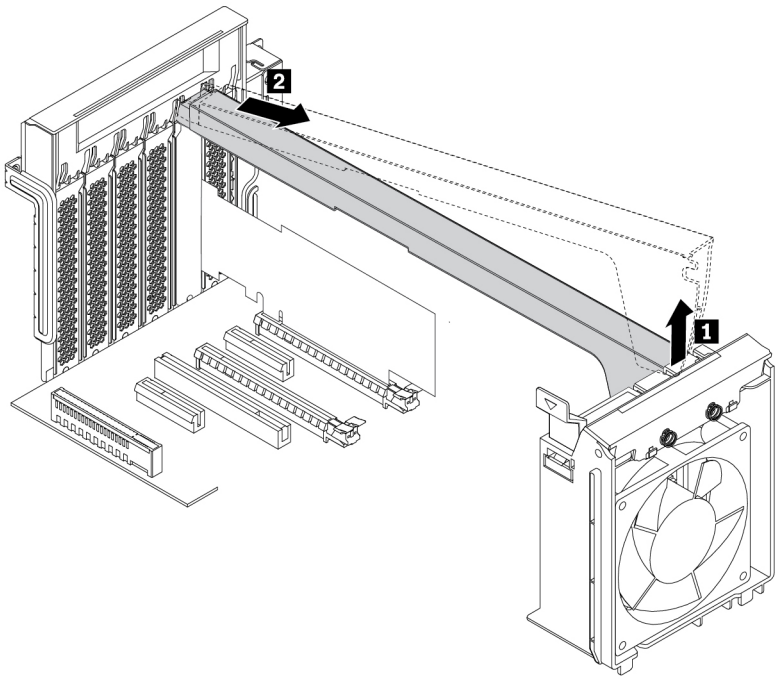

Figure 103. Removing the PCIe card retainer

4. To remove the PCIe card, do the following:

a. Lift the plastic PCIe card latch at the rear of the computer. Then, pivot the latch outward to rest it on the edge of the rear panel.

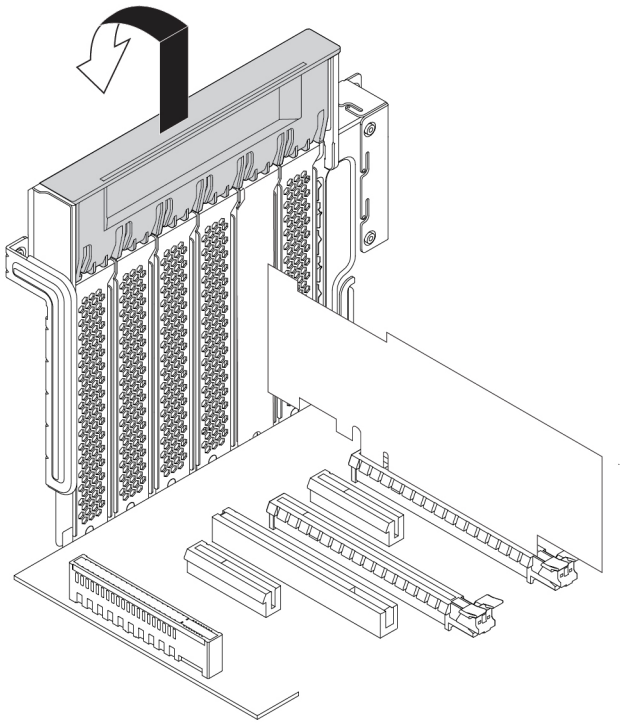

Figure 104. Opening the PCIe card latch

b. If the PCIe card is connected to another device, disconnect the cable from the card first.

c. If the old PCIe card is held in place by a retaining latch, press the card retaining latch 1 as shown to disengage the latch. Then grasp the card and gently pull it out of the slot.

Note: The card might fit tightly into the slot. If necessary, alternately move each side of the card a small amount until the card is removed from the slot.

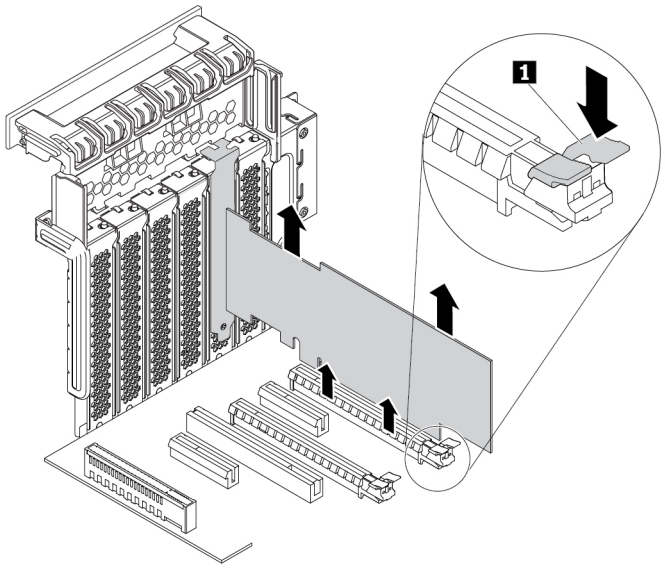

Figure 105. Removing a PCIe card

5. To install a new PCIe card, do the following:
   a. Remove the new PCIe card from its static-protective package.

b. Lift the plastic PCIe card latch at the rear of the computer. Then, pivot the latch outward to rest it on the edge of the rear panel.

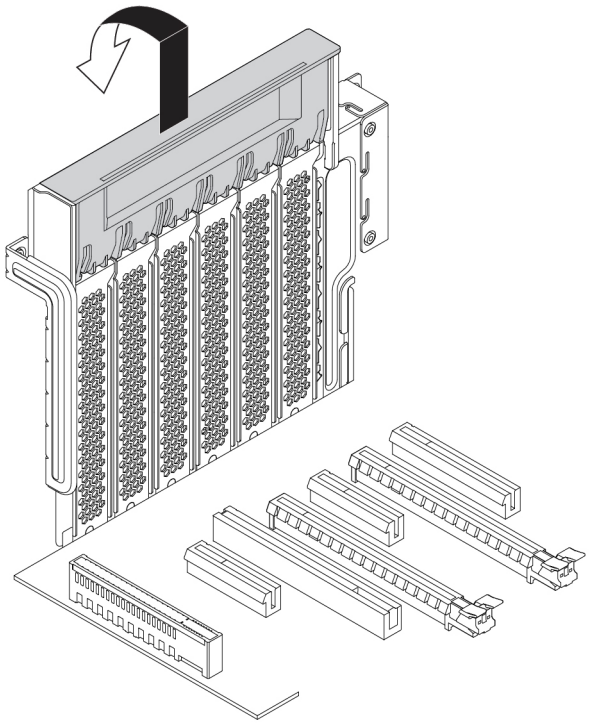

Figure 106. Opening the PCIe card latch

c. Remove the appropriate metal slot cover. Install the new card into the appropriate slot on the system board. See “Parts on the system board” on page 8.

d. Pivot the PCIe card latch and push it back in until it snaps into position.

e. If the new PCIe card needs to be connected to another device, connect the cable of the device to the new PCIe card.

6. To install a PCIe card retainer, insert the corresponding end of the PCIe card retainer into the gaps in the PCIe card latch as shown. Pivot the retainer downward to insert the part a into the corresponding slot in the front fan assembly. Then, pivot the tab on the front fan assembly to close the latch inside.

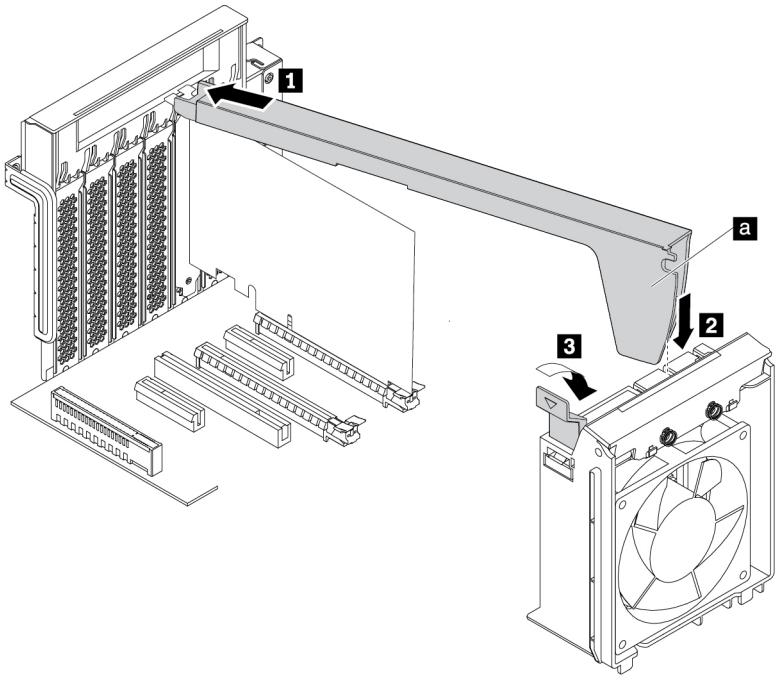

Figure 107. Installing the PCIe card retainer

What to do next:

- To work with another piece of hardware, go to the appropriate section.
- To complete the installation or replacement, go to "Completing the parts replacement" on page 134.

Full-length PCIe card

Attention: Do not open your computer or attempt any repair before reading and understanding the "Read this first: Important safety information" on page iii.

Your computer comes with the following combinations: one standard PCI card slot, two PCIe 3.0 x4 card slots, one PCIe 3.0 x8 card slot, and two PCIe 3.0 x16 card slots.

To remove or install a full-length PCIe card, do the following:

1. Prepare your computer. See "Preparing your computer and removing the computer cover" on page 59.
2. Lay the computer on its side for easier access to the system board.

3. Lift the plastic PCIe card latch at the rear of the computer. Then, pivot the latch outward to rest it on the edge of the rear panel.

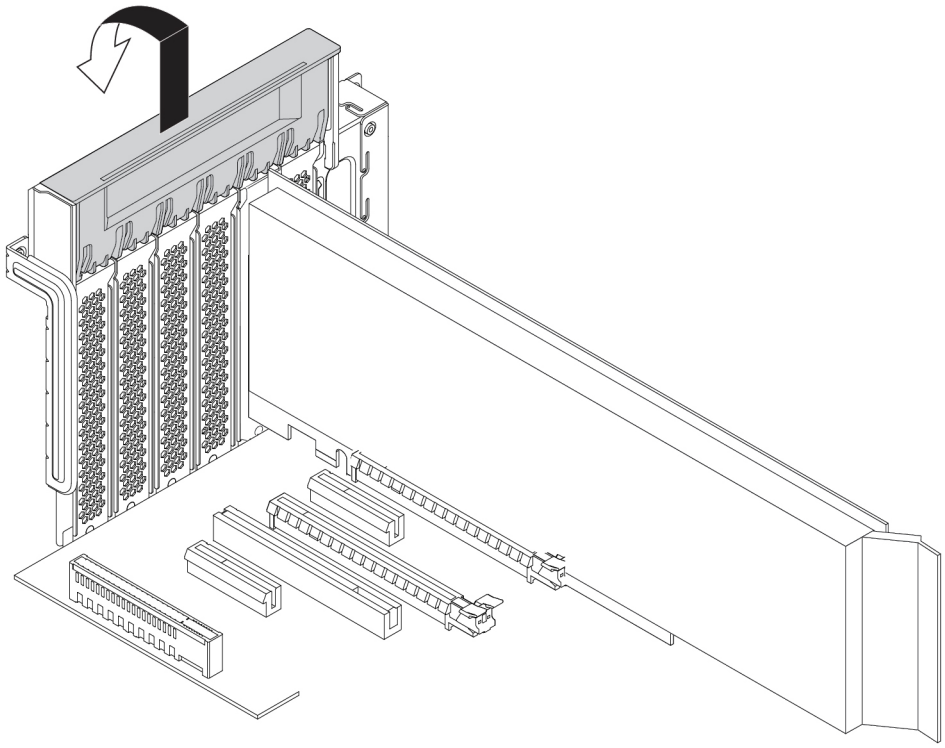

Figure 108. Opening the PCIe card latch

4. Pull and pivot the tab on the front fan assembly as shown to open the latch inside.

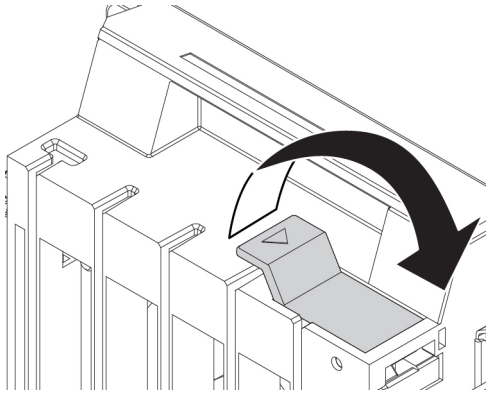

Figure 109. Opening the latch in the front fan assembly

5. To remove a full-length PCIe card, disconnect the power cable from the card first. Press the card retaining latch as shown to disengage the latch, and grasp the old card and gently pull it out of the slot.

   Notes:

   - Remove any parts that might prevent your access to the latch.
   - The card might fit tightly into the slot. If necessary, alternately move each side of the card a small amount until the card is removed from the slot.

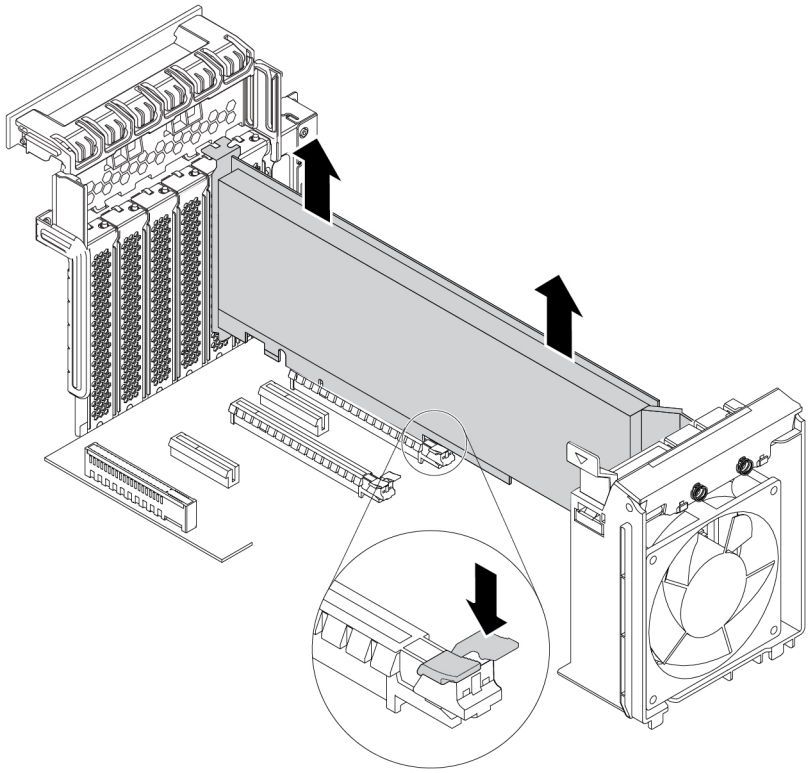

Figure 110. Removing a full-length PCIe card

6. To install a full-length PCIe card, do the following:
   a. If you are installing a new full-length PCIe card, remove the appropriate metal slot cover.
   b. Remove the new full-length PCIe card from its static-protective package.
   c. Align the extender on the new full-length PCIe card with the corresponding slot in the front fan assembly. Then, install the new card into the appropriate slot on the system board. See “Parts on the system board” on page 8.

      Note: It is recommended that you install the full-length PCIe card into a PCIe 3.0 x16 card slot for best performance.
7. Pivot the PCIe card latch and push it back in until it snaps into position. Then, pivot the tab on the front fan assembly to close the latch inside.
8. Connect one end of the power cable to the new full-length PCIe card and the other end to the appropriate power connector on the system board. See “Parts on the system board” on page 8.

What to do next:

- To work with another piece of hardware, go to the appropriate section.
- To complete the installation or replacement, go to “Completing the parts replacement” on page 134.

Heat-sink-and-fan assembly

Attention: Do not open your computer or attempt any repair before reading and understanding the “Read this first: Important safety information” on page iii.

CAUTION:



Avoid contact with hot components inside the computer. During operation, some components become hot enough to burn the skin. Before you open the computer cover, turn off the computer, disconnect power, and wait approximately 10 minutes for the components to cool.

To remove or install the heat-sink-and-fan assembly, do the following:

1. Prepare your computer. See “Preparing your computer and removing the computer cover” on page 59.
2. Lay the computer on its side for easier access to the system board.
3. Locate the heat-sink-and-fan assembly. See “Computer components” on page 7.
4. Disconnect the heat-sink-and-fan-assembly cable from the microprocessor fan connector on the system board.
5. Remove the four screws that secure the heat-sink-and-fan assembly to the system board in diagonal sequence. For example,
   a. Partially remove screw 1, then fully remove screw 2, and then fully remove screw 1.
   b. Partially remove screw 3, then fully remove screw 4, and then fully remove screw 3.

   Note: The illustration might be slightly different from your computer.

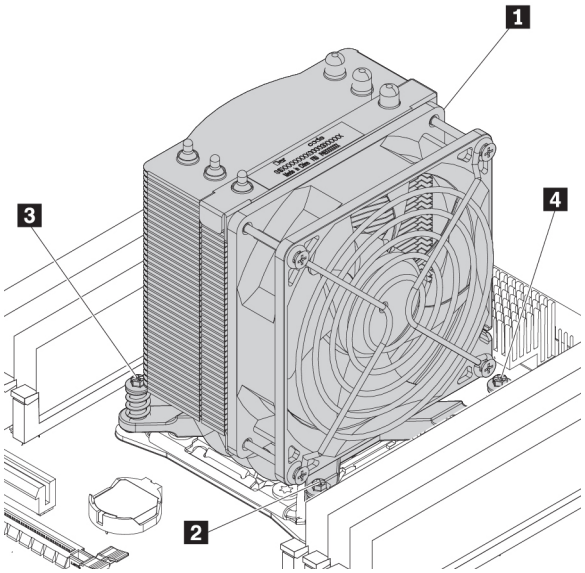

Figure 111. Removing the heat-sink-and-fan assembly

6. Carefully remove the heat-sink-and-fan assembly to avoid any possible damage to the system board.

   Notes:

   - The four screws cannot be removed from the heat-sink-and-fan assembly.

- You might have to gently twist the heat-sink-and-fan assembly to free it from the microprocessor.
- Do not touch the thermal grease while handling the heat-sink-and-fan assembly.

7. Apply appropriate amount of thermal grease to the new heat-sink-and-fan assembly.
8. Position the new heat-sink-and-fan assembly on the system board so that the four screws are aligned with the holes in the system board.

   Note: Ensure that the heat-sink-and-fan assembly cable is toward the microprocessor fan connector on the system board.
9. Install the four screws to secure the new heat-sink-and-fan assembly in diagonal sequence. Do not over-tighten the screws.
   a. Partially tighten screw 1, then fully tighten screw 2, and then fully tighten screw 1.
   b. Partially tighten screw 3, then fully tighten screw 4, and then fully tighten screw 3.
10. Connect the heat-sink-and-fan-assembly cable to the microprocessor fan connector on the system board. See “Parts on the system board” on page 8.

What to do next:

- To work with another piece of hardware, go to the appropriate section.
- To complete the installation or replacement, go to “Completing the parts replacement” on page 134.

Super capacitor module

Attention: Do not open your computer or attempt any repair before reading and understanding the “Read this first: Important safety information” on page iii.

To remove or install the super capacitor module, do the following:

1. Prepare your computer. See “Preparing your computer and removing the computer cover” on page 59.
2. Lay the computer on its side for easier access to the super capacitor module.
3. To remove the super capacitor module, do the following:
   a. Pull and pivot the tab on the front fan assembly as shown to open the latch inside.

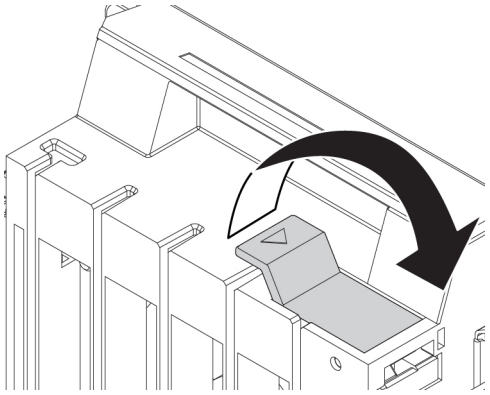

Figure 112. Opening the latch in the front fan assembly

b. Disconnect the super-capacitor-module cable from the RAID adapter. Then, remove the holder with the failing super capacitor module.

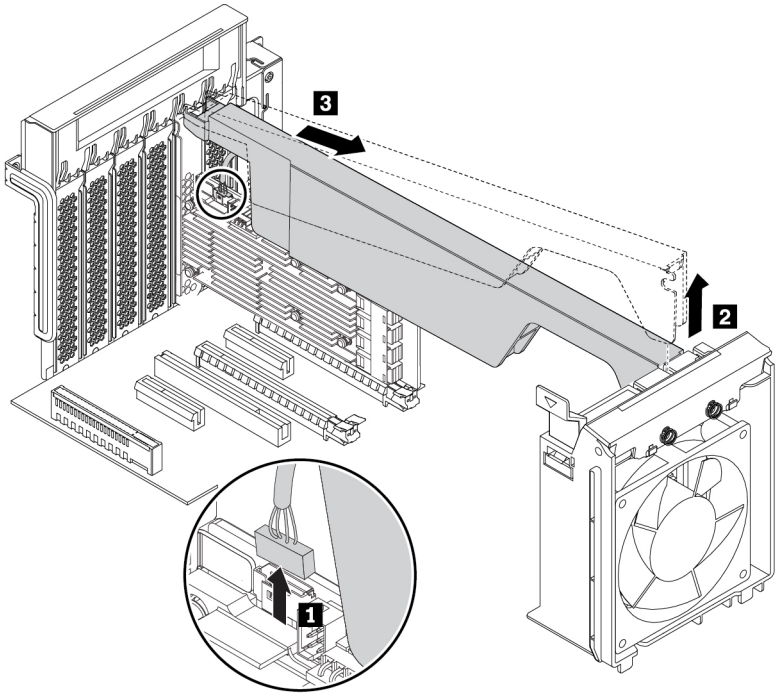

Figure 113. Removing the super capacitor module

4. To install a new super capacitor module, do the following:
   a. Touch the static-protective package that contains the new super capacitor module and its holder to any unpainted surface on the outside of the computer. Then, remove the new super capacitor module and its holder from the package.
   b. Pull and pivot the tab on the front fan assembly as shown to open the latch inside.

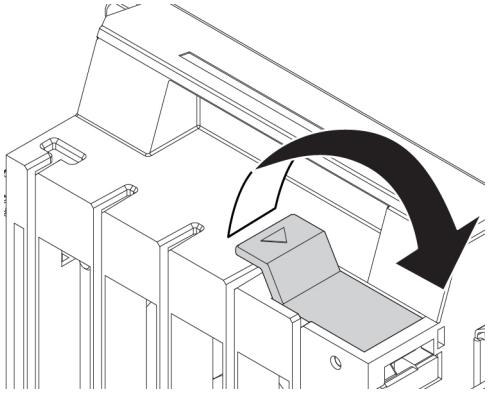

Figure 114. Opening the latch in the front fan assembly

   c. Connect the super-capacitor-module cable to the super capacitor module connector on the RAID adapter.

d. Insert the corresponding end of the holder into the gaps in the PCIe card latch as shown. Pivot the holder downward to insert the part a into the corresponding slot in the front fan assembly. Then, pivot the tab on the front fan assembly to secure the holder.

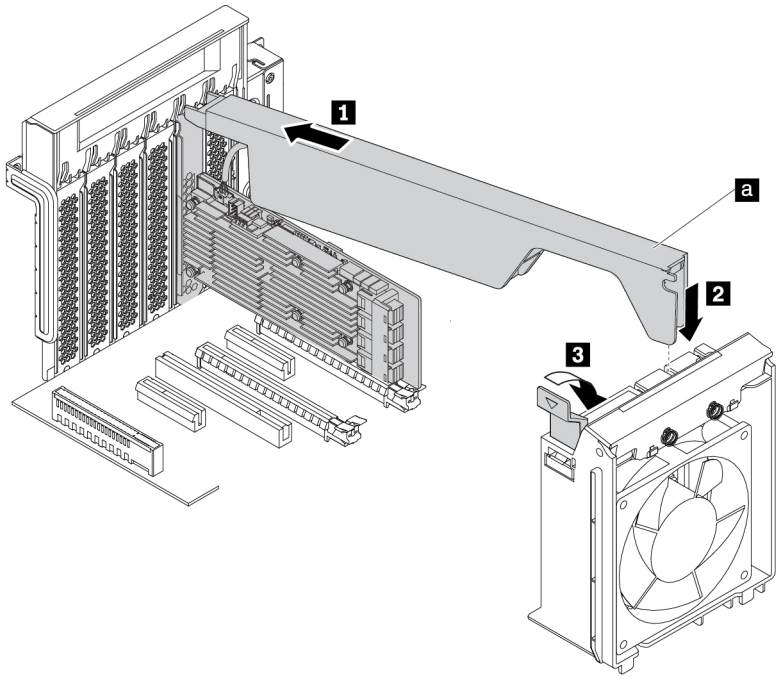

Figure 115. Installing the super capacitor module

What to do next:

- To work with another piece of hardware, go to the appropriate section.
- To complete the installation or replacement, go to "Completing the parts replacement" on page 134.

Front fan assembly

Attention: Do not open your computer or attempt any repair before reading and understanding the "Read this first: Important safety information" on page iii.

CAUTION:



Keep fingers and other parts of your body away from hazardous, moving parts. If you suffer an injury, seek medical care immediately.

To remove or install the front fan assembly, do the following:

1. Prepare your computer. See "Preparing your computer and removing the computer cover" on page 59.
2. Remove the following devices if any:
   - Full-length PCIe cards, see "Full-length PCIe card" on page 115
   - PCIe card retainer, see "PCIe card" on page 109
   - Super capacity module, see "Super capacitor module" on page 119
3. To remove the front fan assembly, do the following:

a. Pull the front fan assembly by the handle to slide it out of the computer chassis.

Note: When you slide out the front fan assembly, avoid pulling the front-fan-assembly cable.

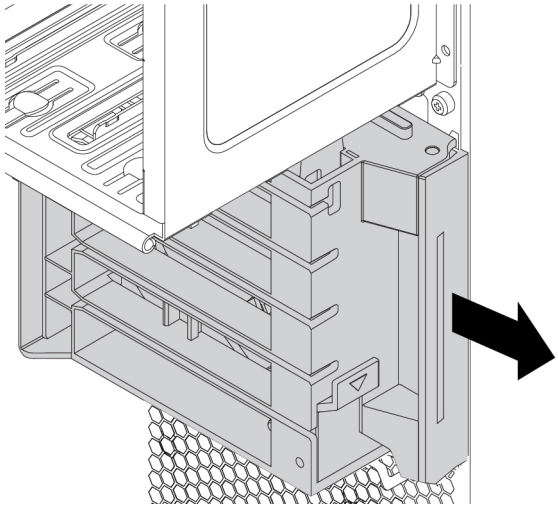

Figure 116. Removing the front fan assembly

b. Disconnect the front-fan-assembly cable from the front-fan-assembly connector on the system board.

4. To install a new front fan assembly, do the following:
   a. Connect the cable of the new front fan assembly to the front-fan-assembly connector on the system board. See “Parts on the system board” on page 8.
   b. Align the top and bottom edges of the new front fan assembly with the front-fan-assembly retainer in the computer chassis. Then, slide the new front fan assembly inward until it is secured in position.

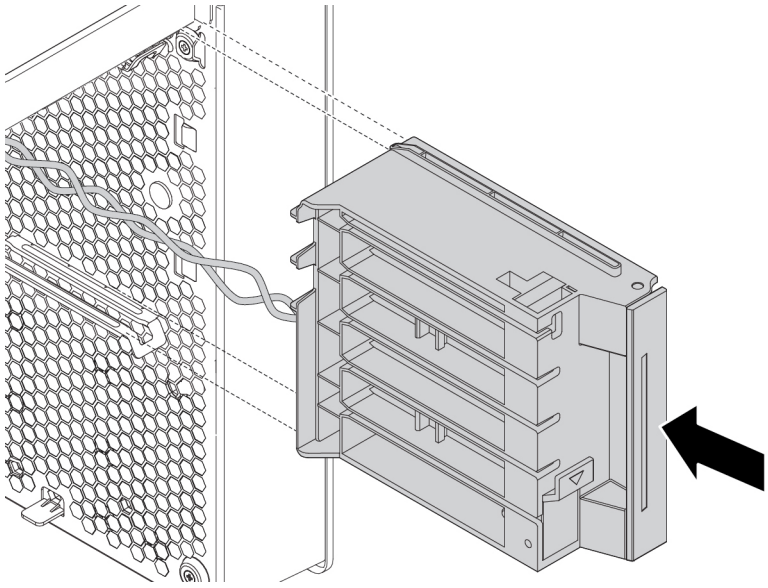

Figure 117. Installing the front fan assembly

5. Reinstall the M.2 solid-state drive holder, the full-length PCIe cards, the PCIe card retainer, and the super capacitor module if you have removed them.

What to do next:

- To work with another piece of hardware, go to the appropriate section.
- To complete the installation or replacement, go to “Completing the parts replacement” on page 134.

Rear fan assembly

Attention: Do not open your computer or attempt any repair before reading and understanding the “Read this first: Important safety information” on page iii.

CAUTION:



Keep fingers and other parts of your body away from hazardous, moving parts. If you suffer an injury, seek medical care immediately.

To remove or install the rear fan assembly, do the following:

1. Prepare your computer. See “Preparing your computer and removing the computer cover” on page 59.
2. Locate the rear fan assembly. See “Computer components” on page 7.
3. To remove the rear fan assembly, do the following:
   a. Locate and disconnect the rear-fan-assembly cable from the rear-fan-assembly connector on the system board.
   b. Remove the rear fan assembly by breaking or cutting the rubber mounts and gently pulling the rear fan assembly out of the chassis.

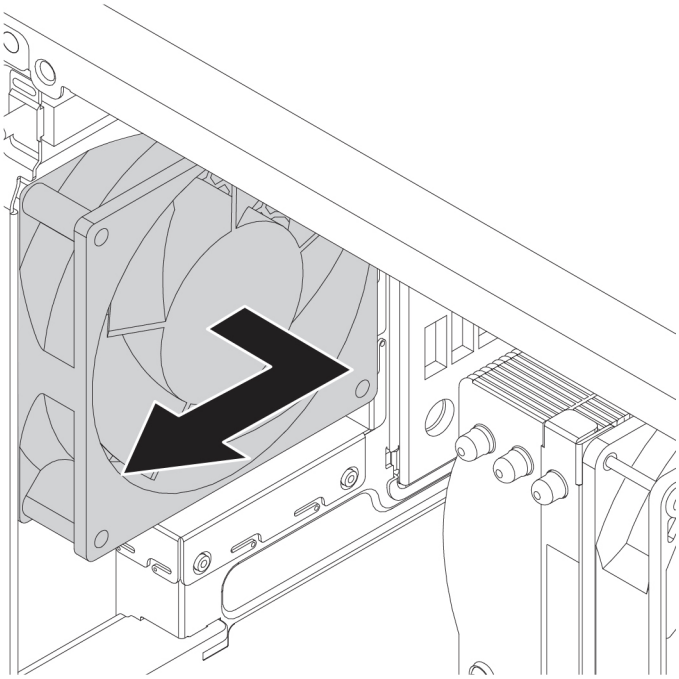

Figure 118. Removing the rear fan assembly

4. To install a new rear fan assembly, do the following:

a. Align the new rubber mounts with the corresponding holes in the chassis and push the rubber mounts through the holes. Pull the tips of the rubber mounts until the rear fan assembly is secured in place.

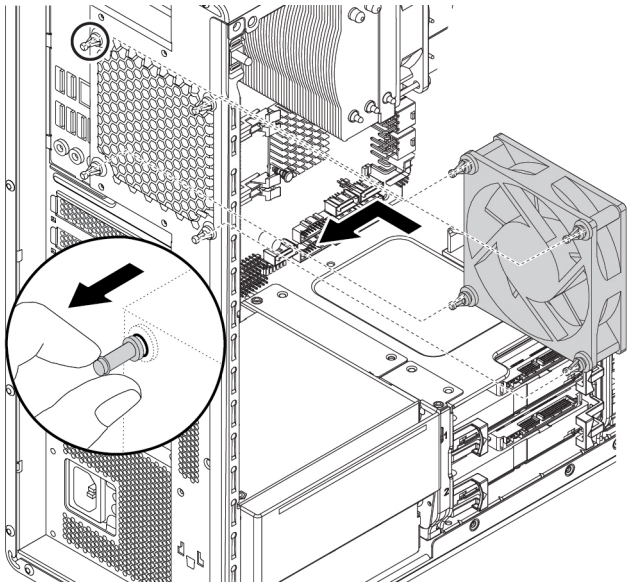

Figure 119. Installing the rear fan assembly

b. Connect the rear-fan-assembly cable to the rear-fan-assembly connector on the system board. See “Parts on the system board” on page 8.

What to do next:

- To work with another piece of hardware, go to the appropriate section.
- To complete the installation or replacement, go to “Completing the parts replacement” on page 134.

Memory module

Attention: Do not open your computer or attempt any repair before reading and understanding the “Read this first: Important safety information” on page iii.

Your computer has eight slots for installing DDR4 RDIMMs that provide up to a maximum of 256 GB system memory. When removing or installing a memory module, use the following guidelines:

- Use 8 GB, 16 GB, or 32 GB DDR4 ECC RDIMMs in any combination up to a maximum of 256 GB.

- Always install DIMMs in the following order as illustrated:

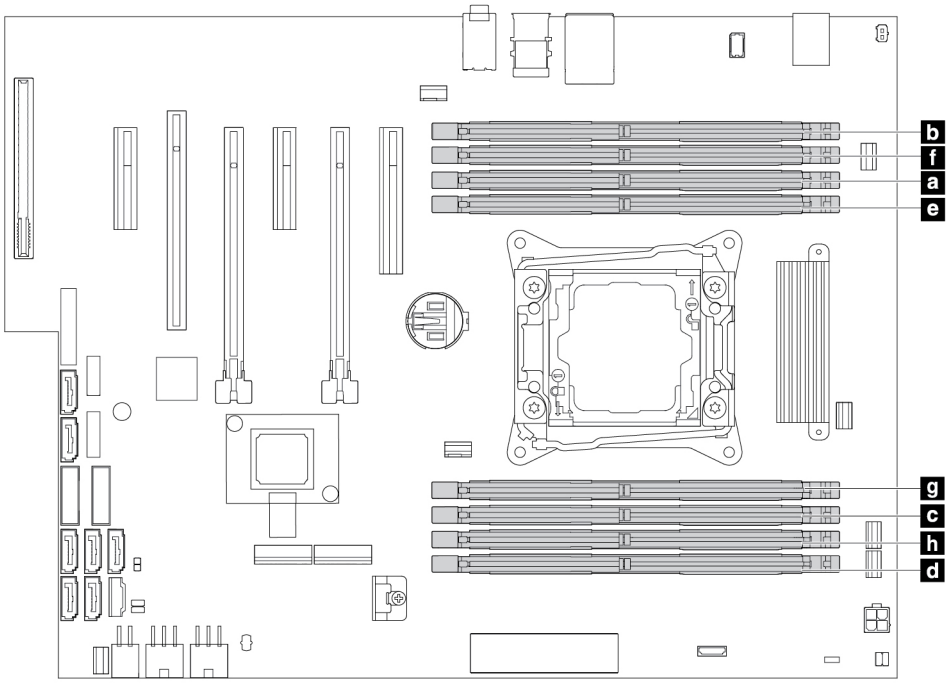

Figure 120. Memory module installation order

To remove or install a memory module, do the following:

1. Prepare your computer. See “Preparing your computer and removing the computer cover” on page 59.
2. Lay the computer on its side for easier access to the system board.
3. Locate the memory module slot. See “Parts on the system board” on page 8.
4. To remove the memory module, open the retaining clips and gently pull the memory module out of the memory slot.

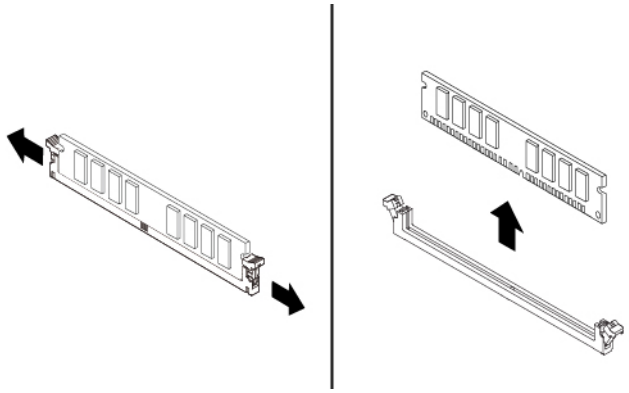

Figure 121. Removing a memory module

5. To install a memory module, do the following:

a. Open the retaining clips of the memory slot into which you want to install the memory module.

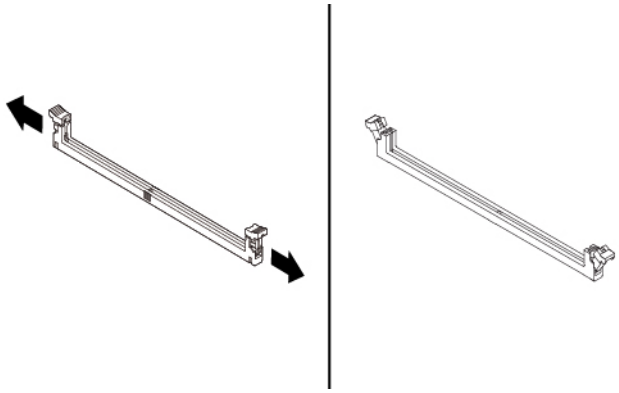

Figure 122. Opening the retaining clips

b. Position the new memory module over the memory slot. Ensure that the notch 1 on the memory module aligns correctly with the slot key 2 on the system board. Push the memory module straight down into the slot until the retaining clips close.

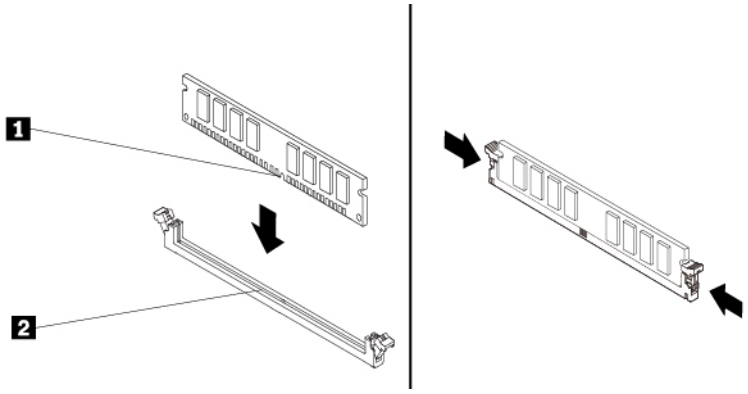

Figure 123. Installing a memory module

What to do next:

- To work with another piece of hardware, go to the appropriate section.
- To complete the installation or replacement, go to “Completing the parts replacement” on page 134.

Coin-cell battery

Attention: Do not open your computer or attempt any repair before reading and understanding the “Read this first: Important safety information” on page iii.

Your computer has a special type of memory that maintains the date, time, and settings for built-in features, such as parallel-connector assignments (configuration). A coin-cell battery keeps this information active when you turn off the computer.

The coin-cell battery normally requires no charging or maintenance throughout its life; however, no battery lasts forever. If the coin-cell battery fails, the date and time information is lost.

Refer to the “Lithium coin cell battery notice” in the *Safety, Warranty, and Setup Guide* for information about replacing and disposing of the battery.

To remove or install the coin-cell battery, do the following:

1. Prepare your computer. See “Preparing your computer and removing the computer cover” on page 59.
2. Locate the coin-cell battery. See “Parts on the system board” on page 8.
3. Remove any parts that might impede your access to the coin-cell battery. Depending on your computer model, you might need to remove the following parts for easier access to the coin-cell battery.
   - “PCIe card” on page 109
   - “Full-length PCIe card” on page 115
   - “Super capacitor module” on page 119
4. Remove the old coin-cell battery as shown.

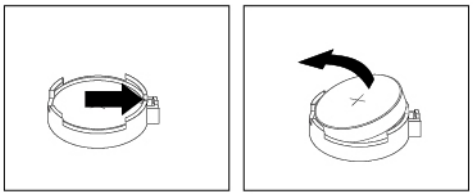

Figure 124. Removing the coin-cell battery

5. Install a new coin-cell battery as shown.

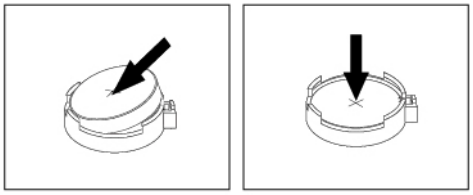

Figure 125. Installing a coin-cell battery

6. Reinstall the PCIe cards or the super capacitor module if you have removed them. See “PCIe card” on page 109, “Full-length PCIe card” on page 115, or “Super capacitor module” on page 119.
7. Reinstall the computer cover and connect the cables. See “Completing the parts replacement” on page 134.

   Note: When the computer is turned on for the first time after the coin-cell battery is replaced, an error message might be displayed. This is normal after the coin-cell battery is replaced.
8. Turn on the computer and all attached devices.
9. Use the Setup Utility program to set the date and time. See “Using the Setup Utility program” on page 35.

Wi-Fi units

Attention: Do not open your computer or attempt any repair before reading and understanding the “Read this first: Important safety information” on page iii.

The Wi-Fi units include a Wi-Fi adapter, a Wi-Fi card, and a Wi-Fi antenna.

To remove or install the Wi-Fi units, do the following:

1. Prepare your computer. See “Preparing your computer and removing the computer cover” on page 59.

2. To remove the Wi-Fi antenna, unscrew the Wi-Fi antenna cable from the rear of the computer.

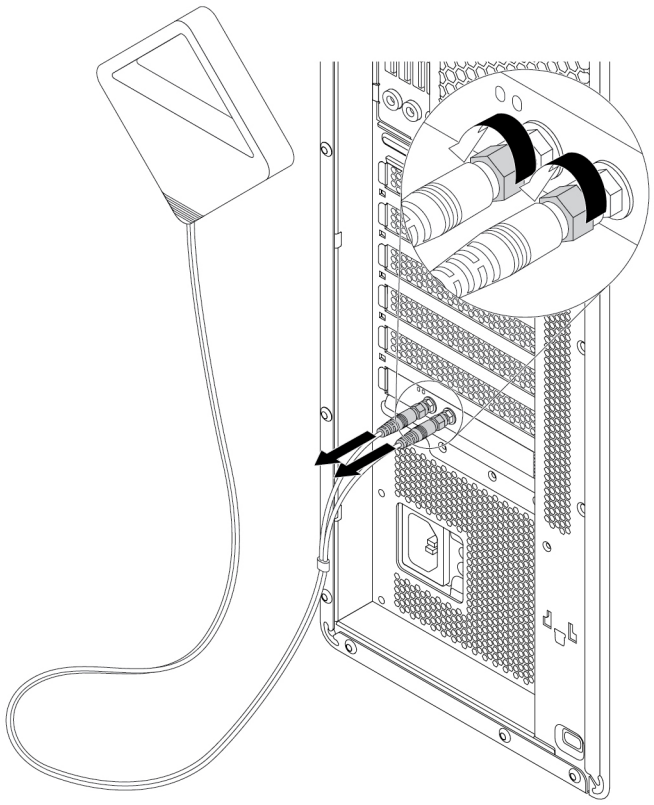

Figure 126. Removing the Wi-Fi antenna

3. If your computer comes with a Wi-Fi card that supports the Bluetooth function, disconnect the Bluetooth cable from the Wi-Fi adapter.

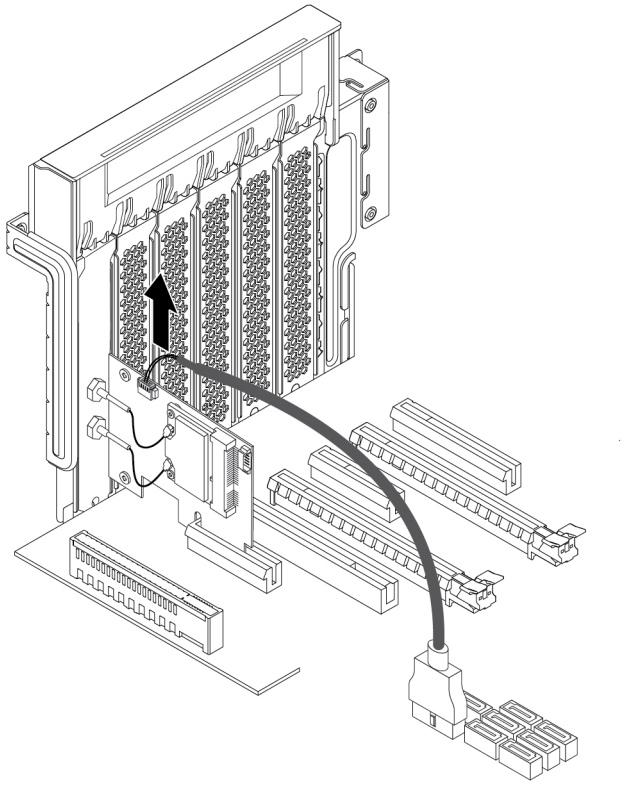

Figure 127. Disconnecting the Bluetooth cable

4. To remove the Wi-Fi adapter, lift the plastic PCIe card latch at the rear of the computer. Then, pivot the latch outward to rest it on the edge of the rear panel.

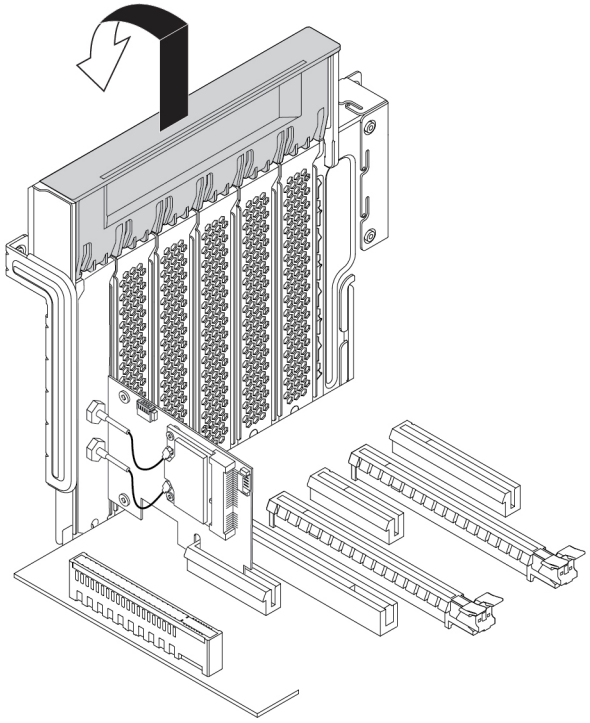

Figure 128. Opening the PCIe card latch

Grasp the Wi-Fi adapter that is installed and gently pull it out of the slot.

Note: The card might fit tightly into the slot. If necessary, alternately move each side of the card a small amount until the card is removed from the slot.

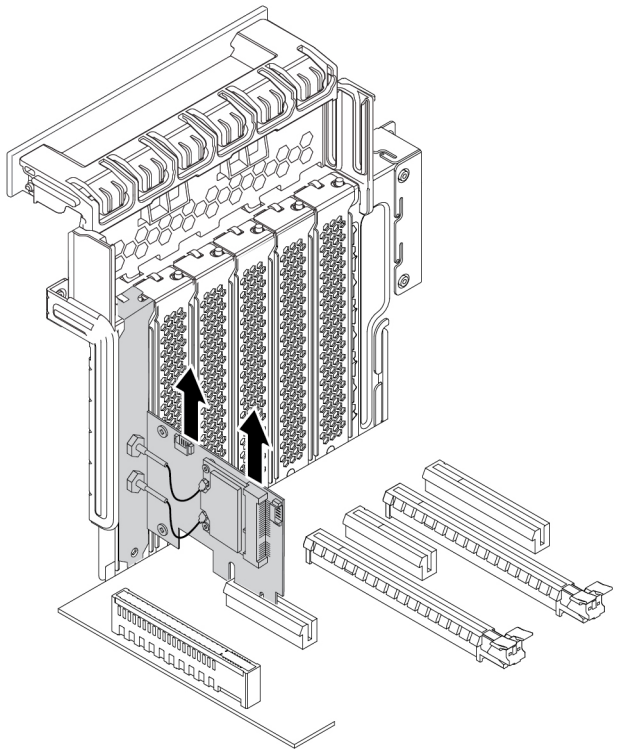

Figure 129. Removing the Wi-Fi adapter

5. To remove the Wi-Fi card, do the following:
   a. Disconnect the two Wi-Fi antenna cables from the Wi-Fi card.
   b. Remove the two screws that secure the Wi-Fi card to the Wi-Fi adapter.
   c. Gently pull the Wi-Fi card out of the mini PCIe slot.

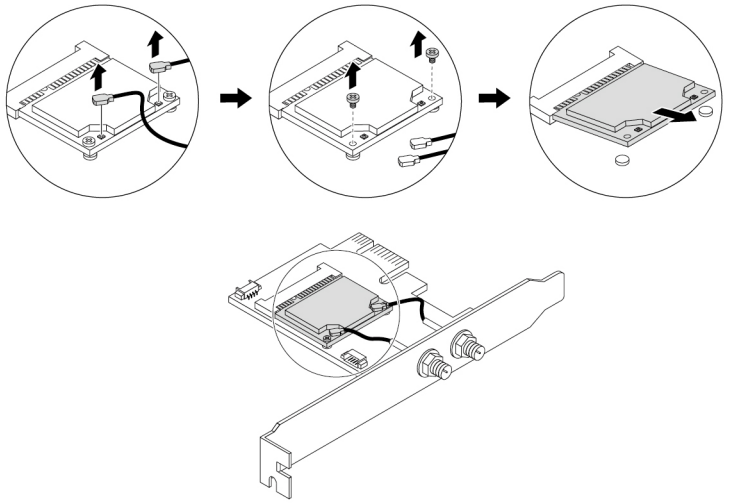

Figure 130. Removing the Wi-Fi card

6. To install a new Wi-Fi card, do the following:
   a. Insert the Wi-Fi card into the mini PCIe slot on the Wi-Fi adapter.
   b. Install the two screws to secure the Wi-Fi card to the Wi-Fi adapter.
   c. Connect the two Wi-Fi antenna cables to the Wi-Fi card.

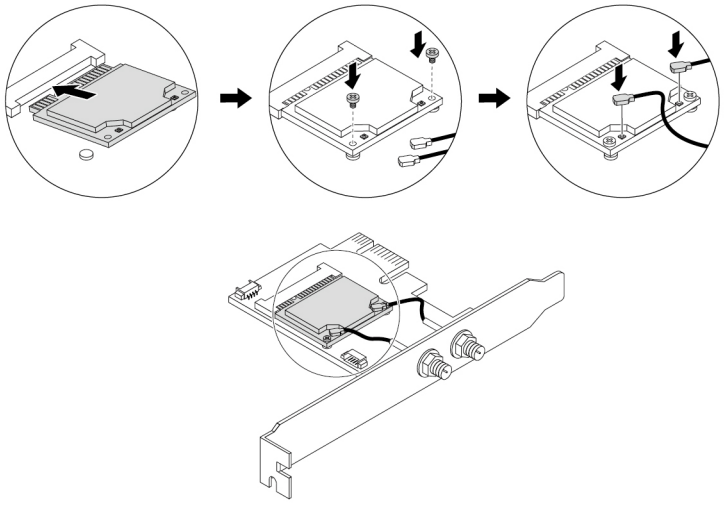

Figure 131. Installing a Wi-Fi card

7. To install the Wi-Fi adapter, install the Wi-Fi adapter into the PCIe card slot on the system board. See “Parts on the system board” on page 8. Then, pivot the PCIe card latch and push it back in until it snaps into position.

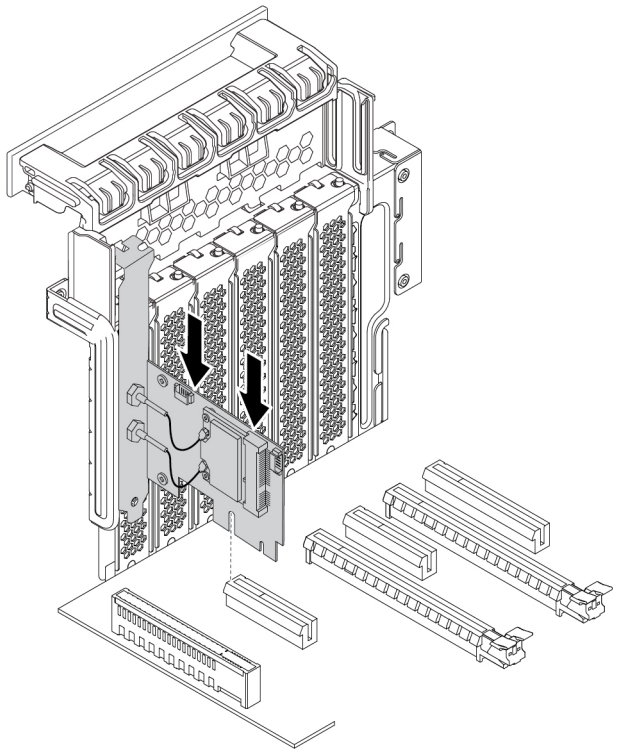

Figure 132. Installing the Wi-Fi adapter

8. If the installed Wi-Fi card supports the Bluetooth function, connect a Bluetooth cable to the Wi-Fi adapter.

   Note: The Bluetooth cable connects the Bluetooth connector on the Wi-Fi adapter to one of the internal USB 3.0 connectors on the system board. See “Parts on the system board” on page 8.

9. Attach the Wi-Fi antenna cable connectors 1 to the corresponding Wi-Fi antenna connectors 2 as shown.

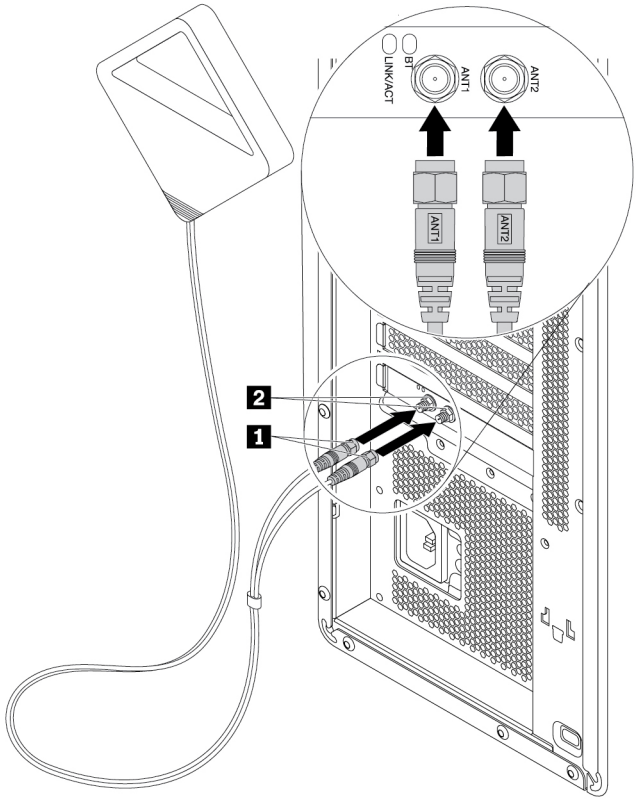

Figure 133. Installing the Wi-Fi antenna

10. Tighten the Wi-Fi antenna cable connectors to secure them to the rear of the computer.

What to do next:

- To work with another piece of hardware, go to the appropriate section.
- To complete the installation or replacement, go to “Completing the parts replacement” on page 134.

Completing the parts replacement

CAUTION:



After replacing a CRU, reinstall all protective covers, including the computer cover, before connecting power and operating the computer. This action is important to help prevent unexpected electrical shock and help ensure the containment of an unexpected fire that could happen under extremely rare conditions.

After completing the installation or replacement for all parts, reinstall the computer cover and reconnect cables. Depending on the parts you installed or replaced, you might need to confirm the updated information in the Setup Utility program. Refer to “Using the Setup Utility program” on page 35.

To reinstall the computer cover and reconnect cables to your computer, do the following:

1. Ensure that all components have been reassembled correctly and that no tools or loose screws are left inside your computer. See “Computer components” on page 7 for the locations of various components in your computer.
2. Ensure that the cables are routed correctly before reinstalling the computer cover. Keep cables clear of the hinges and sides of the computer chassis to avoid interference with reinstalling the computer cover.
3. Hold the computer cover with the handle and position the computer cover on the chassis. Insert the tabs on the bottom of the cover into the corresponding slots on the chassis.

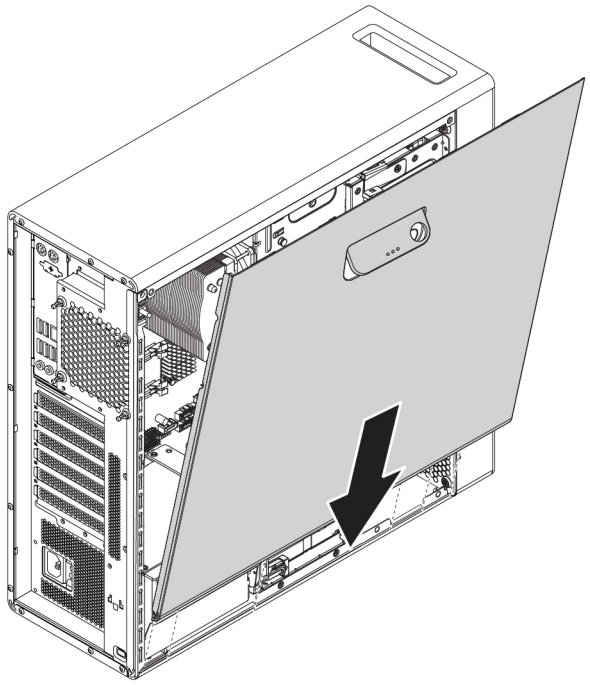

Figure 134. Positioning the computer cover

4. Pivot the cover downward. Press the handle of the computer cover so that the computer cover is locked.

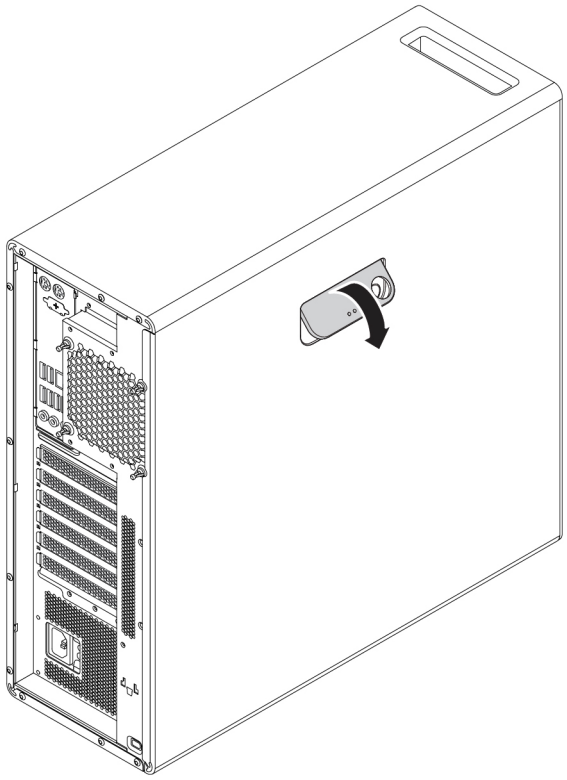

Figure 135. Reinstalling the computer cover

5. Place the computer in an upright position.
6. If there is any locking device available, lock the computer cover. See “Locking your computer” on page 29.
7. Reconnect the external cables and power cords to the corresponding connectors on the computer. See “Hardware locations” on page 1.
8. Update the configuration of your computer if necessary. See “Using the Setup Utility program” on page 35.
9. If a newly installed hardware component does not work correctly, update the device driver.

Chapter 8. Getting information, help, and service

This chapter provides information about getting help and support from Lenovo.

Information resources

You can use the information in this section to access useful resources relating to your computing needs.

Accessing the user guide in various languages

To access the user guide in various languages, go to:
https://support.lenovo.com

Windows help system

The Windows help system provides you with detailed information about using the Windows operating system.

Note: Using the help for Windows 10 requires an active Internet connection.

To access the Windows help system, do the following:

1. Click the Start button to open the Start menu.
2. Click **Get Help**.

Safety and warranty

The *Safety, Warranty, and Setup Guide* provided with your computer contains important safety information, product warranty terms, initial setup procedure, and legal notices. Ensure that you read and understand all safety information in the *Safety, Warranty, and Setup Guide* before using your computer.

In addition, read and understand “Read this first: Important safety information” on page iii before using your computer. This preface provides additional safety information that applies to topics and tasks described in this *User Guide*.

Lenovo Web site

The Lenovo Web site (https://www.lenovo.com) provides up-to-date information and services to help you buy, upgrade, and maintain your computer. You also can do the following:

- Shop for desktop and notebook computers, monitors, projectors, upgrades, and accessories for your computer, and special offers.
- Purchase additional services, such as support for hardware, operating systems, programs, network setup and configuration, and custom installations.
- Purchase upgrades and extended hardware repair services.
- Access troubleshooting and support information for your computer model and other supported products.
- Find a Service Provider located near you.

Lenovo Support Web site

Technical support information is available on the Lenovo Support Web site at:
https://support.lenovo.com

© Copyright Lenovo 2018, 2020

This Web site is updated with the latest support information such as the following:

- Drivers and software
- Diagnostic solutions
- Product and service warranty
- Product and parts details
- User guides and manuals
- Knowledge base and frequently asked questions
- Lenovo Support phone numbers

Frequently asked questions

For the answers to frequently asked questions about your computer, go to:
http://www.lenovo.com/support/faq

Help and service

This section provides information about obtaining help and service.

Calling for service

During the warranty period, you can get help and information by telephone through the Customer Support Center. For the warranty period of your computer, go to https://www.lenovo.com/warranty-status. For a list of Lenovo Support phone numbers, go to https://pcsupport.lenovo.com/supportphonelist.

Note: Phone numbers are subject to change without notice. If the number for your country or region is not provided, contact your Lenovo reseller or Lenovo marketing representative.

The following services are available during the warranty period:

- **Problem determination** - Trained service personnel are available to assist you with determining a hardware problem and deciding what action is necessary to fix the problem.
- **Hardware repair** - If the problem is caused by hardware under warranty, trained service personnel are available to provide the applicable level of service.
- **Engineering Change management** - There might be changes that are required after a product has been sold. Lenovo or your reseller will make selected Engineering Changes (ECs) that apply to your hardware available.

These items are not covered by the warranty:
- Replacement or use of parts not manufactured for or by Lenovo or non-warranted Lenovo parts
- Identification of software problem sources
- Configuration of BIOS as part of an installation or upgrade
- Changes, modifications, or upgrades to device drivers
- Installation and maintenance of network operating systems (NOS)
- Installation and maintenance of programs

If possible, be at your computer when you call. Have the following information available:
- Machine type and model
- Serial numbers of your hardware products
- Description of the problem
- Exact wording of any error messages
- Hardware and software configuration information

Using other services

You might travel with your computer or relocate it to a country or region where the machine type for your desktop or notebook computer is sold. In such a situation, your computer might be eligible for International Warranty Service, which automatically entitles you to obtain warranty service throughout the warranty period. Service will be performed by service providers authorized to perform warranty service.

Service methods and procedures vary by country, and some services might not be available in all countries. International Warranty Service is delivered through the method of service (such as depot, carry-in, or on-site service) that is provided in the servicing country. Service centers in certain countries might not be able to service all models of a particular machine type. In some countries, fees and restrictions might apply at the time of service.

To determine whether your computer is eligible for International Warranty Service and to view a list of the countries or regions where service is available, go to https://support.lenovo.com.

For technical assistance with the installation of or questions related to Service Packs for your preinstalled Microsoft Windows product, go to https://support.microsoft.com. You also can contact the Lenovo Customer Support Center for help. Some fees might apply.

Purchasing additional services

During and after the warranty period, you can purchase additional services. Examples of these additional services include:

- Support for hardware, operating systems, and programs
- Network setup and configuration services
- Upgraded or extended hardware repair services
- Custom installation services

Service availability and service name might vary by country or region. For more information about these services, go to the Lenovo Web site at:
https://www.lenovo.com

Appendix A. System memory speed

The Intel Xeon® microprocessor families compatible with this ThinkStation computer feature an integrated memory controller, which provides the microprocessor with direct access to the system memory. Because of this design, the system memory speed will be determined by a number of factors, including the microprocessor model and the type, speed, size (capacity), and number of DIMMs installed.

Notes:

- The actual system memory speed of the memory modules varies depending on the microprocessor model. For example, your computer comes with 2666 MT/s memory modules, but microprocessor only supports up to 2400 MT/s memory modules. Then the system memory speed will be no faster than 2400 MT/s.
- The microprocessor models supported in your computer might vary. For a list of supported microprocessor models, contact the Lenovo Customer Support Center.

© Copyright Lenovo 2018, 2020

Appendix B. Supplemental information about the Ubuntu operating system

In limited countries or regions, Lenovo offers customers an option to order computers with the preinstalled Ubuntu® operating system.

If the Ubuntu operating system is available on your computer, read the following information before you use the computer. Ignore any information related to Windows-based programs, utilities, and Lenovo preinstalled applications in this documentation.

Accessing the Lenovo Limited Warranty

This product is covered by the terms of the Lenovo Limited Warranty (LLW), version L505-0010-02 08/2011. You can view the LLW in a number of languages from the following Web site. Read the Lenovo Limited Warranty at:
https://www.lenovo.com/warranty/llw_02

The LLW also is preinstalled on the computer. To access the LLW, go to the following directory:

```
/usr/share/doc/lenovo-doc
```

If you cannot view the LLW either from the Web site or from your computer, contact your local Lenovo office or reseller to obtain a printed version of the LLW.

Accessing the Ubuntu help system

The Ubuntu help system provides information about how to use the Ubuntu operating system. To access the help system from the Unity, move your pointer to the Launch bar, and then click the **Help** icon. If you cannot find the **Help** icon from the Launch bar, click the **Search** icon, and type Help to search it.

To learn more about the Ubuntu operating system, go to:
https://www.ubuntu.com

Getting support information

If you need help, service, technical assistance, or more information about the Ubuntu operating system or other applications, contact the provider of the Ubuntu operating system or the provider of the application. If you need the service and support for hardware components shipped with your computer, contact Lenovo. For more information about how to contact Lenovo, refer to the *User Guide* and *Safety, Warranty, and Setup Guide*.

To access the latest *User Guide* and *Safety, Warranty, and Setup Guide*, go to:
https://support.lenovo.com

Note: For information about configuring RAID in the Linux® environment, contact your Linux software provider.

© Copyright Lenovo 2018, 2020

Appendix C. Regulatory and TCO Certified information of countries and regions

The latest compliance information is available at:
https://www.lenovo.com/compliance

TCO Certified

Selected models are TCO Certified and bear the TCO Certified logo.

Note: TCO Certified is an international third-party sustainability certification for IT products. For details, go to https://www.lenovo.com/us/en/compliance/tco.

Export classification notice

This product is subject to the United States Export Administration Regulations (EAR) and has an Export Classification Control Number (ECCN) of 5A992.c. It can be re-exported except to any of the embargoed countries in the EAR E1 country list.

Electronic emissions notices

Federal Communications Commission Declaration of Conformity

The following information refers to Lenovo personal computer machine types 30BE, 30BF, and 30BQ.

This equipment has been tested and found to comply with the limits for a Class B digital device, pursuant to Part 15 of the FCC Rules. These limits are designed to provide reasonable protection against harmful interference in a residential installation. This equipment generates, uses, and can radiate radio frequency energy and, if not installed and used in accordance with the instructions, may cause harmful interference to radio communications. However, there is no guarantee that interference will not occur in a particular installation. If this equipment does cause harmful interference to radio or television reception, which can be determined by turning the equipment off and on, the user is encouraged to try to correct the interference by one or more of the following measures:

- Reorient or relocate the receiving antenna.
- Increase the separation between the equipment and receiver.
- Connect the equipment into an outlet on a circuit different from that to which the receiver is connected.
- Consult an authorized dealer or service representative for help.

Lenovo is not responsible for any radio or television interference caused by using other than specified or recommended cables and connectors or by unauthorized changes or modifications to this equipment. Unauthorized changes or modifications could void the user's authority to operate the equipment.

This device complies with Part 15 of the FCC Rules. Operation is subject to the following two conditions: (1) this device may not cause harmful interference, and (2) this device must accept any interference received, including interference that may cause undesired operation.

Responsible Party:
Lenovo (United States) Incorporated
1009 Think Place - Building One
Morrisville, NC 27560
Phone Number: 919-294-5900

© Copyright Lenovo 2018, 2020

Industry Canada Class B emission compliance statement

CAN ICES-3(B)/NMB-3(B)

European Union conformity

EU contact: Lenovo (Slovakia), Landererova 12, 811 09 Bratislava, Slovakia

EMC Directive Statement: This product is in conformity with the protection requirements of EU Council EMC Directive 2014/30/EU on the approximation of the laws of the Member States relating to electromagnetic compatibility.

This product has been tested and found to comply with the limits for Class B equipment according to European Standards harmonized in the Directives in compliance. The Class B requirements for equipment are intended to offer adequate protection to broadcast services within residential environments.

Radio Equipment Directive Statement: This product is in conformity with all the requirements and essential norms that apply to EU Council Radio Equipment Directive 2014/53/EU on the approximation of the laws of the Member States relating to radio equipment. The full text of the system EU declaration of conformity and the EU wireless module declarations are available at following Internet addresses: http://www.lenovo.com/eu-doc-workstations

Lenovo cannot accept responsibility for any failure to satisfy the protection requirements resulting from a non-recommended modification of the product, including the installation of option cards from other manufacturers.

German Class B compliance statement

Deutschsprachiger EU Hinweis:

Hinweis für Geräte der Klasse B EU-Richtlinie zur Elektromagnetischen Verträglichkeit

Dieses Produkt entspricht den Schutzanforderungen der EU-Richtlinie 2014/30/EU zur Angleichung der Rechtsvorschriften über die elektromagnetische Verträglichkeit in den EU-Mitgliedsstaaten und hält die Grenzwerte der Klasse B der Norm gemäß Richtlinie.

Um dieses sicherzustellen, sind die Geräte wie in den Handbüchern beschrieben zu installieren und zu betreiben. Des Weiteren dürfen auch nur von der Lenovo empfohlene Kabel angeschlossen werden. Lenovo übernimmt keine Verantwortung für die Einhaltung der Schutzanforderungen, wenn das Produkt ohne Zustimmung der Lenovo verändert bzw. wenn Erweiterungskomponenten von Fremdherstellern ohne Empfehlung der Lenovo gesteckt/eingebaut werden.

Deutschland:

Einhaltung des Gesetzes über die elektromagnetische Verträglichkeit von Betriebsmitteln

Dieses Produkt entspricht dem „Gesetz über die elektromagnetische Verträglichkeit von Betriebsmitteln“ EMVG (früher „Gesetz über die elektromagnetische Verträglichkeit von Geräten“). Dies ist die Umsetzung der EMV EU-Richtlinie 2014/30/EU in der Bundesrepublik Deutschland.

Zulassungsbescheinigung laut dem Deutschen Gesetz über die elektromagnetische Verträglichkeit von Betriebsmitteln, EMVG vom 20. Juli 2007 (früher Gesetz über die elektromagnetische Verträglichkeit von Geräten), bzw. der EMV EU Richtlinie 2014/30/EU, für Geräte der Klasse B.

Dieses Gerät ist berechtigt, in Übereinstimmung mit dem Deutschen EMVG das EG-Konformitätszeichen - CE - zu führen. Verantwortlich für die Konformitätserklärung nach Paragraf 5 des EMVG ist die Lenovo (Deutschland) GmbH, Meitnerstr. 9, D-70563 Stuttgart.

Informationen in Hinsicht EMVG Paragraf 4 Abs. (1) 4:

Das Gerät erfüllt die Schutzanforderungen nach EN 55024 und EN 55032 Klasse B.

Korean wireless-radio compliance information

무선설비 전파 혼신 (사용주파수 **2400**~**2483.5**, **5725**~**5825** 무선제품해당)
해당 무선설비가 전파혼신 가능성이 있으므로 인명안전과 관련된 서비스는 할 수 없음

Japan VCCI Class B compliance statement

この装置は、クラスB情報技術装置です。この装置は家庭環境で使用する事を目的としていますが、この装置がラジオやテレビジョン受信機に近接して使用されると、受信障害を引き起こすことがあります。取扱書に従って正しい取り扱いをして下さい。

VCCI-B

Japan compliance statement for products which connect to the power mains with rated current less than or equal to 20 A per phase

日本の定格電流が 20A/相 以下の機器に対する高調波電流規制
高調波電流規格 JIS C 61000-3-2 適合品

Japan notice for ac power cord

The ac power cord shipped with your product can be used only for this specific product. Do not use the ac power cord for other devices.

本製品およびオプションに電源コード・セットが付属する場合は、
それぞれ専用のものになっていますので他の電気機器には使用し
ないでください。

Lenovo product service information for Taiwan

委製商/進口商名稱: 荷蘭商聯想股份有限公司台灣分公司
進口商地址:台北市中山區北安路780號7樓
進口商電話: 0800-000-702 (代表號)

Keyboard and mouse compliance statement for Taiwan

本產品隨貨附已取得經濟部標準檢驗局認可之PS/2或USB的鍵盤與滑鼠一組

Eurasian compliance mark

EAC

Brazil audio notice

Ouvir sons com mais de 85 decibéis por longos períodos pode provocar danos ao sistema auditivo.

Mexico wireless-radio compliance information

Advertencia: En Mexico la operación de este equipo estásujeta a las siguientes dos condiciones: (1) es posible que este equipo o dispositivo no cause interferencia perjudicial y (2) este equipo o dispositivo debe aceptar cualquier interferencia, incluyendo la que pueda causar su operación no deseada.

Additional regulatory information

For additional regulatory information, refer to the *Regulatory Notice* shipped with your computer. Depending on the configuration of your computer and the country or region where the computer was purchased, you might have received additional printed regulatory notices. All regulatory notices are available on the Lenovo Support Web site in electronic format. To access electronic copies of the documentation, go to https://support.lenovo.com.

Appendix D. WEEE and recycling information of countries and regions

Lenovo encourages owners of information technology (IT) equipment to responsibly recycle their equipment when it is no longer needed. Lenovo offers various programs and services to assist equipment owners in recycling their IT products. The latest environmental information is available at:
https://www.lenovo.com/ecodeclaration

Important WEEE information

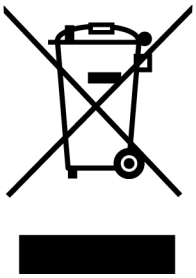

The WEEE marking on Lenovo products applies to countries with WEEE and e-waste regulations (for example, the European WEEE Directive, India E-Waste Management Rules). Appliances are labeled in accordance with local regulations concerning waste electrical and electronic equipment (WEEE). These regulations determine the framework for the return and recycling of used appliances as applicable within each geography. This label is applied to various products to indicate that the product is not to be thrown away, but rather put in the established collection systems for reclaiming these end of life products.

Users of electrical and electronic equipment (EEE) with the WEEE marking must not dispose of end of life EEE as unsorted municipal waste, but use the collection framework available to them for the return, recycle, and recovery of WEEE and to minimize any potential effects of EEE on the environment and human health due to the presence of hazardous substances. Lenovo electrical and electronic equipment (EEE) may contain parts and components, which at end-of-life might qualify as hazardous waste.

EEE and waste electrical and electronic equipment (WEEE) can be delivered free of charge to the place of sale or any distributor that sells electrical and electronic equipment of the same nature and function as the used EEE or WEEE.

For additional WEEE information, go to:
https://www.lenovo.com/recycling

WEEE information for Hungary

Lenovo, as a producer, bears the cost incurred in connection with the fulfillment of Lenovo's obligations under Hungary Law No. 197/2014 (VIII.1.) subsections (1)-(5) of section 12.

Recycling information for Japan

Collecting and recycling a disused Lenovo computer or monitor

If you are a company employee and need to dispose of a Lenovo computer or monitor that is the property of the company, you must do so in accordance with the Law for Promotion of Effective Utilization of Resources. Computers and monitors are categorized as industrial waste and should be properly disposed of by an

© Copyright Lenovo 2018, 2020

industrial waste disposal contractor certified by a local government. In accordance with the Law for Promotion of Effective Utilization of Resources, Lenovo Japan provides, through its PC Collecting and Recycling Services, for the collecting, reuse, and recycling of disused computers and monitors. For details, visit the Lenovo Web site at https://www.lenovo.com/recycling/japan. Pursuant to the Law for Promotion of Effective Utilization of Resources, the collecting and recycling of home-used computers and monitors by the manufacturer was begun on October 1, 2003. This service is provided free of charge for home-used computers sold after October 1, 2003. For details, visit the Lenovo Web site at https://www.lenovo.com/recycling/japan.

Disposing of Lenovo computer components

Some Lenovo computer products sold in Japan may have components that contain heavy metals or other environmental sensitive substances. To properly dispose of disused components, such as a printed circuit board or drive, use the methods described above for collecting and recycling a disused computer or monitor.

Disposing of disused lithium batteries from Lenovo computers

A button-shaped lithium battery is installed inside your Lenovo computer to provide power to the computer clock while the computer is off or disconnected from the main power source. If you need to replace it with a new one, contact your place of purchase or contact Lenovo for service. If you need to dispose of a disused lithium battery, insulate it with vinyl tape, contact your place of purchase or an industrial-waste-disposal operator, and follow their instructions. Disposal of a lithium battery must comply with local ordinances and regulations.

Recycling information for Brazil

Declarações de Reciclagem no Brasil

Descarte de um Produto Lenovo Fora de Uso

Equipamentos elétricos e eletrônicos não devem ser descartados em lixo comum, mas enviados à pontos de coleta, autorizados pelo fabricante do produto para que sejam encaminhados e processados por empresas especializadas no manuseio de resíduos industriais, devidamente certificadas pelos orgãos ambientais, de acordo com a legislação local.

A Lenovo possui um canal específico para auxiliá-lo no descarte desses produtos. Caso você possua um produto Lenovo em situação de descarte, ligue para o nosso SAC ou encaminhe um e-mail para: reciclar@lenovo.com, informando o modelo, número de série e cidade, a fim de enviarmos as instruções para o correto descarte do seu produto Lenovo.

Battery recycling information for Taiwan



Battery recycling information for the European Union

EU

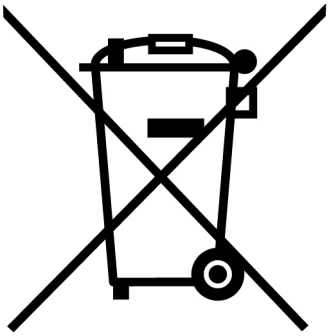

Notice: This mark applies only to countries within the European Union (EU).

Batteries or packaging for batteries are labeled in accordance with European Directive 2006/66/EC concerning batteries and accumulators and waste batteries and accumulators. The Directive determines the framework for the return and recycling of used batteries and accumulators as applicable throughout the European Union. This label is applied to various batteries to indicate that the battery is not to be thrown away, but rather reclaimed upon end of life per this Directive.

In accordance with the European Directive 2006/66/EC, batteries and accumulators are labeled to indicate that they are to be collected separately and recycled at end of life. The label on the battery may also include a chemical symbol for the metal concerned in the battery (Pb for lead, Hg for mercury, and Cd for cadmium). Users of batteries and accumulators must not dispose of batteries and accumulators as unsorted municipal waste, but use the collection framework available to customers for the return, recycling, and treatment of batteries and accumulators. Customer participation is important to minimize any potential effects of batteries and accumulators on the environment and human health due to the potential presence of hazardous substances.

Before placing electrical and electronic equipment (EEE) in the waste collection stream or in waste collection facilities, the end user of equipment containing batteries and/or accumulators must remove those batteries and accumulators for separate collection.

Disposing of lithium batteries and battery packs from Lenovo products

A coin-cell type lithium battery might be installed inside your Lenovo product. You can find details about the battery in the product documentation. If the battery needs to be replaced, contact your place of purchase or contact Lenovo for service. If you need to dispose of a lithium battery, insulate it with vinyl tape, contact your place of purchase or a waste-disposal operator, and follow their instructions.

Disposing of battery packs from Lenovo products

Your Lenovo device might contain a lithium-ion battery pack or a nickel metal hydride battery pack. You can find details on the battery pack in the product documentation. If you need to dispose of a battery pack, insulate it with vinyl tape, contact Lenovo sales, service, or your place of purchase, or a waste-disposal operator, and follow their instructions. You also can refer to the instructions provided in the user guide for your product.

For proper collection and treatment, go to:
https://www.lenovo.com/environment

Appendix E. Restriction of Hazardous Substances (RoHS) Directive of countries and regions

The latest environmental information about Lenovo products is available at:
https://www.lenovo.com/ecodeclaration

European Union RoHS

This Lenovo product, with included parts (cables, cords, and so on) meets the requirements of Directive 2011/65/EU on the restriction of the use of certain hazardous substances in electrical and electronic equipment ("RoHS recast" or "RoHS 2").

For more information about Lenovo worldwide compliance on RoHS, go to:
https://www.lenovo.com/rohs-communication

Turkish RoHS

The Lenovo product meets the requirements of the Republic of Turkey Directive on the Restriction of the Use of Certain Hazardous Substances in Waste Electrical and Electronic Equipment (WEEE).

Türkiye AEEE Yönetmeliğine Uygunluk Beyanı

Bu Lenovo ürünü, T.C. Çevre ve Orman Bakanlığı'nın "Atık Elektrik ve Elektronik Eşyalarda Bazı Zararlı Maddelerin Kullanımının Sınırlandırılmasına Dair Yönetmelik (AEEE)" direktiflerine uygundur.

AEEE Yönetmeliğine Uygundur.

Ukraine RoHS

Цим підтверджуємо, що продукція Леново відповідає вимогам нормативних актів України, які обмежують вміст небезпечних речовин

India RoHS

RoHS compliant as per E-Waste (Management) Rules.

© Copyright Lenovo 2018, 2020

Mainland China RoHS

产品中有害物质的名称及含量

部件名称	有害物质					
	铅(Pb)	汞(Hg)	镉(Cd)	六价铬 (Cr(VI))	多溴连苯 (PBB)	多溴二苯醚 (PBDE)
印刷电路板组件*	X	O	O	O	O	O
硬盘	X	O	O	O	O	O
光驱	X	O	O	O	O	O
内存	X	O	O	O	O	O
电脑I/O 附件	X	O	O	O	O	O
电源	X	O	O	O	O	O
键盘	X	O	O	O	O	O
鼠标	X	O	O	O	O	O
机箱/ 附件	X	O	O	O	O	O
电池	X	O	O	O	O	O

本表格依据 SJ/T 11364 的规定编制。
O：表示该有害物质在该部件所有均质材料中的含量均在 GB/T 26572 规定的限量要求以下。
×：表示该有害物质至少在该部件的某一均质材料中的含量超出 GB/T 26572 规定的限量要求。
注：表中标记“×”的部件，皆因全球技术发展水平限制而无法实现有害物质的替代。
印刷电路板组件*：包括印刷电路板及其零部件、电容和连接器
根据型号的不同，可能不会含有以上的所有部件，请以实际购买机型为准



在中华人民共和国境内销售的电子信息产品必须标识此标志，标志内的数字代表在正常使用状态下的产品的环保使用期限

Taiwan RoHS

單元	限用物質及其化學符號					
	鉛 (Pb)	汞 (Hg)	鎘 (Cd)	六價鉻 (Cr^{+6})	多溴聯苯 (PBB)	多溴二苯醚 (PBDE)
印刷電路板組件	–	○	○	○	○	○
硬碟	–	○	○	○	○	○
光碟機	–	○	○	○	○	○
記憶體	–	○	○	○	○	○
電腦I/O配件	–	○	○	○	○	○
電源供應器	–	○	○	○	○	○
鍵盤	–	○	○	○	○	○
滑鼠	–	○	○	○	○	○
機殼/配件	–	○	○	○	○	○

備考1. 〝超出0.1 wt %〞及〝超出0.01 wt %〞係指限用物質之百分比含量超出百分比含量基準值。
備考2. 〝○〞係指該項限用物質之百分比含量未超出百分比含量基準值。
備考3. 〝–〞係指該項限用物質為排除項目。

Appendix F. ENERGY STAR model information

ENERGY STAR® is a joint program of the U.S. Environmental Protection Agency and the U.S. Department of Energy aimed at saving money and protecting the environment through energy efficient products and practices.

Lenovo is proud to offer products with the ENERGY STAR certified designation. Lenovo computers, if carry an ENERGY STAR mark, have been designed and tested to conform to the ENERGY STAR program requirements for computers as prescribed by the U.S. Environmental Protection Agency. For a certified computer, an ENERGY STAR mark may be affixed to the product, the product packaging, or displayed electronically on the E-label screen or the power settings interface.

By using ENERGY STAR compliant products and taking advantage of the power-management features of your computer, you reduce the consumption of electricity. Reduced electrical consumption contributes to potential financial savings, a cleaner environment, and the reduction of greenhouse gas emissions. For more information about ENERGY STAR, go to https://www.energystar.gov/.

Lenovo encourages you to make efficient use of energy an integral part of your day-to-day operations. To help in this endeavor, set the following power-management features to take effect when your computer has been inactive for a specified duration:

Table 1. Default power plan (when plugged into ac power)

• Turn off the display: After 10 minutes • Put the computer to sleep: After 25 minutes

To awaken your computer from Sleep mode, press any key on your keyboard.

To change power settings, do the following:

1. Click the Start button to open the Start menu.
2. Click **Windows System → Control Panel**.
3. View Control Panel by Large icons or Small icons, and then click **Power Options**.
4. Follow the instructions on the screen.

© Copyright Lenovo 2018, 2020

Appendix G. Notices

Lenovo may not offer the products, services, or features discussed in this document in all countries. Consult your local Lenovo representative for information on the products and services currently available in your area. Any reference to a Lenovo product, program, or service is not intended to state or imply that only that Lenovo product, program, or service may be used. Any functionally equivalent product, program, or service that does not infringe any Lenovo intellectual property right may be used instead. However, it is the user's responsibility to evaluate and verify the operation of any other product, program, or service.

Lenovo may have patents or pending patent applications covering subject matter described in this document. The furnishing of this document does not give you any license to these patents. You can send license inquiries, in writing, to:

Lenovo (United States), Inc.
8001 Development Drive
Morrisville, NC 27560
U.S.A.
Attention: Lenovo Director of Licensing

LENOVO PROVIDES THIS PUBLICATION "AS IS" WITHOUT WARRANTY OF ANY KIND, EITHER EXPRESS OR IMPLIED, INCLUDING, BUT NOT LIMITED TO, THE IMPLIED WARRANTIES OF NON-INFRINGEMENT, MERCHANTABILITY OR FITNESS FOR A PARTICULAR PURPOSE. Some jurisdictions do not allow disclaimer of express or implied warranties in certain transactions, therefore, this statement may not apply to you.

This information could include technical inaccuracies or typographical errors. Changes are periodically made to the information herein; these changes will be incorporated in new editions of the publication. Lenovo may make improvements and/or changes in the products and/or the programs described in this publication at any time without notice.

The products described in this document are not intended for use in implantation or other life support applications where malfunction may result in injury or death to persons. The information contained in this document does not affect or change Lenovo product specifications or warranties. Nothing in this document shall operate as an express or implied license or indemnity under the intellectual property rights of Lenovo or third parties. All information contained in this document was obtained in specific environments and is presented as an illustration. The result obtained in other operating environments may vary.

Lenovo may use or distribute any of the information you supply in any way it believes appropriate without incurring any obligation to you.

Any references in this publication to non-Lenovo Web sites are provided for convenience only and do not in any manner serve as an endorsement of those Web sites. The materials at those Web sites are not part of the materials for this Lenovo product, and use of those Web sites is at your own risk.

Any performance data contained herein was determined in a controlled environment. Therefore, the result obtained in other operating environments may vary significantly. Some measurements may have been made on development-level systems and there is no guarantee that these measurements will be the same on generally available systems. Furthermore, some measurements may have been estimated through extrapolation. Actual results may vary. Users of this document should verify the applicable data for their specific environment.

© Copyright Lenovo 2018, 2020

Appendix H. Trademarks

LENOVO, LENOVO logo, THINKSTATION, and THINKSTATION logo are trademarks of Lenovo.

Microsoft, Windows, and Windows Media are trademarks of the Microsoft group of companies.

Intel, Thunderbolt, and Xeon are trademarks of Intel Corporation in the U.S. and/or other countries.

Linux is a registered trademark of Linus Torvalds.

DisplayPort and Mini DisplayPort are trademarks of the Video Electronics Standards Association.

Ubuntu is a registered trademark of Canonical Ltd.

All other trademarks are the property of their respective owners. © 2020 Lenovo.

© Copyright Lenovo 2018, 2020