KWE884520M Wine Cellar



Stylish, flexible storage for your wines

This compact wine cellar offers the ultimate in style and flexibility. It comes with a temperature range from 5 to 20 degrees, and it perfectly matches your other kitchen appliances from the AEG Compact Range.



Keep your wine at the correct temperature

With this wine cellar, you can rest assured that your bottles are stored at the exact temperature required. The direct temperature control allows you to set the temperature from 5 to 20 degrees.



Store up to 18 bottles, even when space is limited

Store up to 18 bottles in this compact wine cellar. The design means there's always something to serve, even when the space in your kitchen is limited.

More Benefits :

• The layout inside this Wine Cooler means that large bottles can be stored.

• This Wine Cooler is designed without handles, giving it a sleek appearance.

Features :

Technical Specs :

• Product Type : Wine_Cellar
•Colour : Stainless Steel with antifingerprint coating
•Dimensions : 450x560x550
•Energy efficiency class : A++
•Noise level, dB(A) : 39
•Net capacity, Fridge, l : 49
•Product Installation : Integrated
•Shelves Number : 2 Wooden Full Width + 1 Plastic bottom basement Full Width
•Shelves Type : Wood
•Bordeaux bottles, n° of : 18
•Door hinges : Drop Down
•ProdPartCode : ER Open

Product Description :

This compact wine cellar offers the ultimate in style and flexibility. It comes with a temperature range from 5 to 20 degrees, and it perfectly matches your other kitchen appliances from the AEG Compact Range.

KWE884520M Wine Cellar

PSGBWC180DE00001

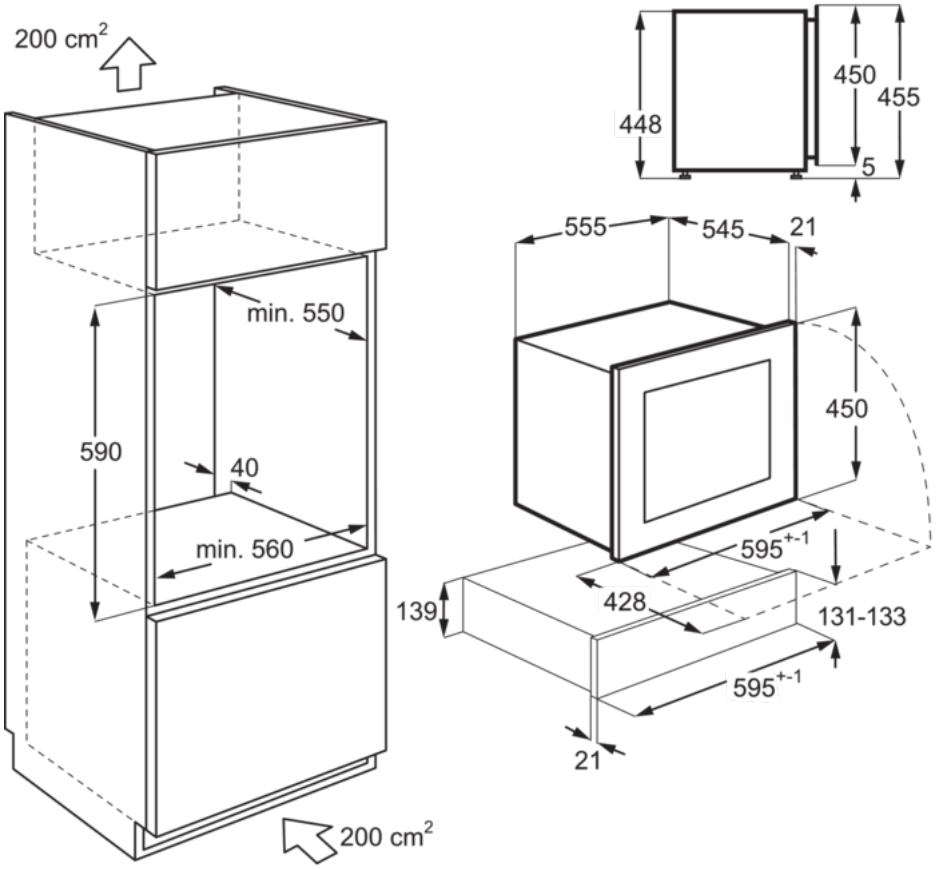

PSGBFZ170DE00005

