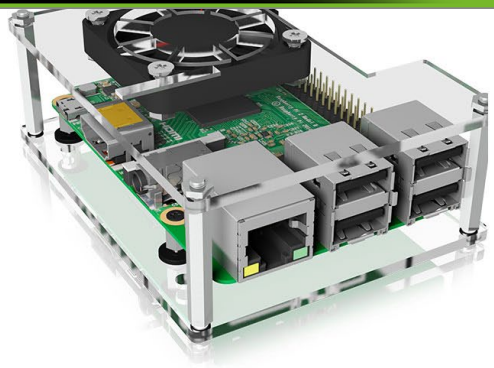

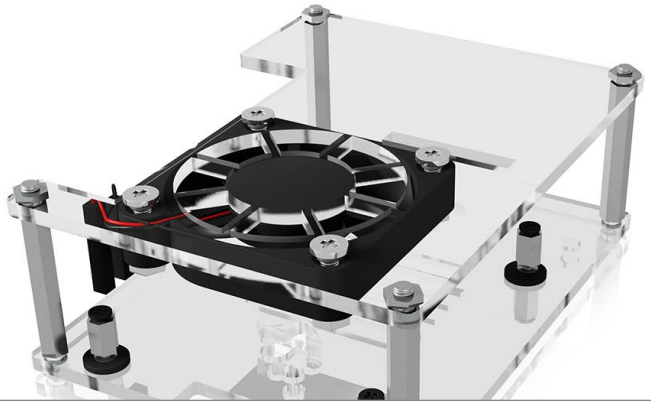

ICY BOX
IB-RP106

Clear acrylic and frameless case for Raspberry Pi® 2, 3 and 4

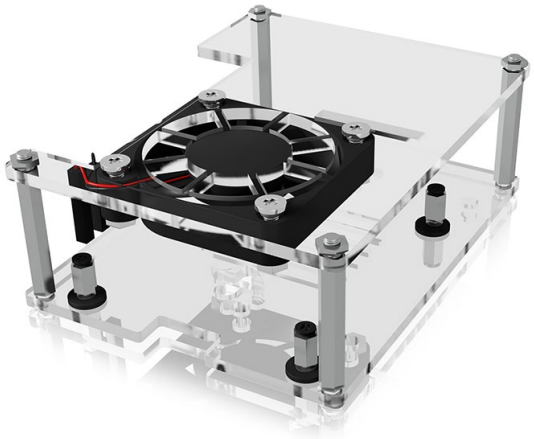

Key features

- Protective solution designed specifically for the Raspberry Pi® 2,3 B/B+ and 4 model B
- Acrylic clear case covers, so you can still see your Pi® and all status LEDs
- The acrylic top cover supports the installation of a 40 mm cooling fan (included)
- Self-adhesive heat sinks for the most important chipsets included
- Supports the installation of Raspberry Pi PoE HAT module
- Can prevent the Raspberry Pi® from slowness caused by high temperature
- Innovative enclosure design allows easy access to all ports like power, video, audio, USB, LAN, microSD card and GPIO, camera CSI and display DSI
- Prepared to connect a Raspberry Pi® touch display and wall mount compatible
- Stackable design for cluster or other demands if you combine two or more IB-RP106

Packing content
1x IB-RP106, 1x 40 mm cooling fan, 1x set of heat sinks, 1x set of screws, standoffs and screw nuts, 1x footpad stickers, 1x screw driver, 1x quick installation guide, (Raspberry Pi® not included)

More space for your ideas!

Keep your Raspberry Pi® computer safe and sound in this enclosure with clear acrylic lids. We designed this case in exigent design, easy to assemble and perfect for any use and supports a 40 mm cooling fan, which can improve the performances of the single board computer.

Technical data

Model	IB-RP106
Article no.	60519
EAN code	4250078169000
Brand	ICY BOX
Colour	Transparent
Material	Acrylic/steel
Raspberry Pi® version	Raspberry Pi® 1 Model B+, Pi® 2 Model B, Pi® 3 Model A+/B/B+, Pi® 4 Model B, Pi® Zero/Zero W
Cooling	Passive: heatsinks, thermal pads Active: 40x40x7 mm fan

Systemvoraussetzungen und Informationen
Compatible with: Raspberry Pi® 1 Model B+, Pi® 2 Model B, Pi® 3 Model A+/B/B+, Pi® 4 Model B, Pi® Zero/Zero W, Asus Tinker Board / Tinker Board S. Raspberry Pi® not included

RaidSonic Technology GmbH • Kurt-Fischer-Straße 50 • 22926 Ahrensburg / Germany
Telephone: +49-(0)4102 – 468 900 (Sales) • Fax: +49-(0)4102 – 468 901 • info@raidsonic.de • www.raidsonic.de
Offers and deliveries are only done under our General Terms and Conditions. Errors and omissions excepted.

RaidSonic Technology GmbH

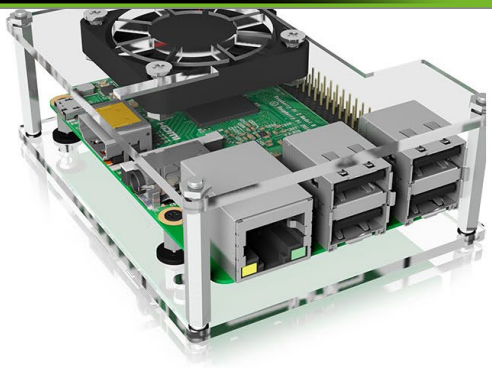

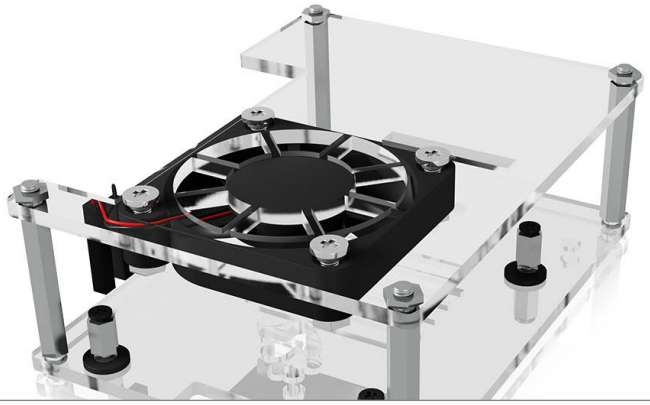

ICY BOX **IB-RP106**
Clear acrylic and frameless case for Raspberry Pi® 2, 3 and 4

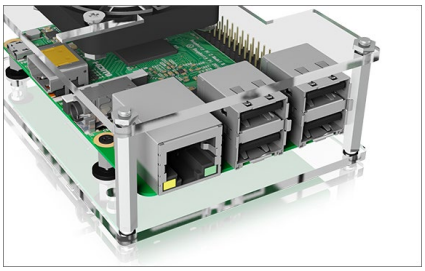

HAT - stands for Hardware Attached on Top

Raspberry Pi® computers are great for everyday tasks, but sometimes you want to add one of the additional hardware controllers at the market. Thanks to their GPIO headers, most Pi® computers can support an additional HAT module, but enclosures not. No problem with the IB-RP106.

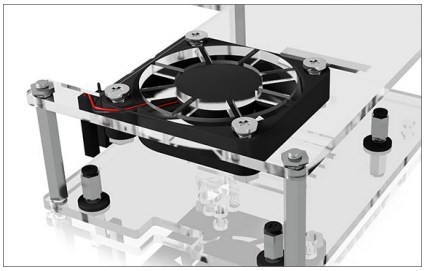

Need a cool Breeze?

The included active 40 mm fan, the heat sinks kit and the framless design of the enclosure dissipate the heat generated from the board and prevents overheating.

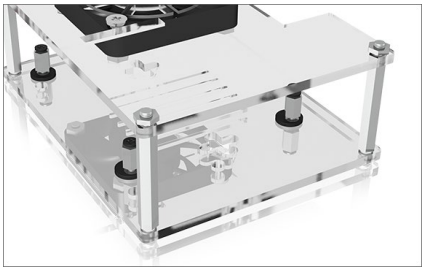

Another brick at the wall

The wall mount fixation holes at the bottom of the case allow to mount the Raspberry Pi® either by fixing it to a VESA® mount using our VESA adapter IB-RPA100, or by fixing it directly to the wall using two screws.

Logistical data

Packing unit:	40 pcs./carton	**Dimension/carton:**	500x220x300 mm
Total weight:	6.2 kg/carton	**Dimension** (with packing)**:**	30x105x200 mm
Gross weight (with packing)**:**	0.140 kg	**Dimension of article:**	90x61x33 mm
Net weight:	0.071 kg	**Country of origin:**	Taiwan

RaidSonic Technology GmbH • Kurt-Fischer-Straße 50 • 22926 Ahrensburg / Germany
Telephone: +49-(0)4102 – 468 900 (Sales) • Fax: +49-(0)4102 – 468 901 • info@raidsonic.de • www.raidsonic.de
Offers and deliveries are only done under our General Terms and Conditions. Errors and omissions excepted.

RaidSonic Technology GmbH