Dell EMC Data Domain DD9800 System

Installation and Storage Expansion Guide

September 2022
Rev. 04

Notes, cautions, and warnings

NOTE: A NOTE indicates important information that helps you make better use of your product.

CAUTION: A CAUTION indicates either potential damage to hardware or loss of data and tells you how to avoid the problem.

WARNING: A WARNING indicates a potential for property damage, personal injury, or death.

© 2021 - 2022 Dell Inc. or its subsidiaries. All rights reserved. Dell, EMC, and other trademarks are trademarks of Dell Inc. or its subsidiaries. Other trademarks may be trademarks of their respective owners.

Contents

Figures **5**

Tables **7**

Chapter 1: Introduction and Preparation **8**
- Document purpose 8
- Tools and supplies needed 8
- Safety information 9
- Working with a portable lift 10
  - Adjusting the arms for a frontal lift 10
  - Reconfiguring the lift with the Voyager kit 11

Chapter 2: Install the System in the Rack **13**
- Unpack the system 13
- Install the rack brackets 13
  - Shelf brackets and cable management assembly 13
  - Install rail brackets on the Data Domain racks (for square or round hole racks) 15
  - Install rail brackets using the adapter hardware (for threaded hole racks) 17
- Install the DD9800 system into a rack 19
- Mount the cable management assembly 22
  - Install the Data Domain cable management assembly 23
- Installing the expansion shelves into the racks 24

Chapter 3: Install the Disk Shelves in the Rack **25**
- Remove filler panels 25
- Install an ES30 or FS15 shelf into the rack 25
  - Racking and cabling 25
  - Rail kit 26
  - Installing the rails in the cabinet 26
  - Adjusting for various rack types 27
  - Installing the rails using the adapter hardware 27
  - Installing the shelf on the rails 29
- Install a DS60 shelf into the rack 30
  - Installing rails 31
  - Installing the shelf onto the rails 34
  - Inserting and securing the top cover and shelf 36
  - 1U cable management tray installation (underneath) 39

Chapter 4: Connect Cables and Power On **53**
- Connecting the expansion shelves and the controllers 54
- ES30 cable information 54
- Connecting multiple ES30 shelves to the DD9800 system 57
  - DD9800 57
  - DD9800 with HA (one rack) 59
  - DD9800 with HA (two racks) 60

DD9800 with DD Cloud Tier (Single node or HA)....62
DD9800 with ERSO....64
DS60 cable information....67
Connecting multiple DS60 shelves to the DD9800 system....68
DD9800....68
DD9800 with HA....69
DD9800 with DD Cloud Tier (Single node)....72
DD9800 with DD Cloud Tier (HA)....73
DD9800 with ERSO....75
Connecting the HA interconnect....77
Connect data cables on both nodes....78
Power on the systems....78
Install the bezel....80

Chapter 5: Configure System for Use....81
Enable administrative communication....81
Accepting the End User License Agreement....82
Run the configuration wizard....83
Configuring the network....83
Configuring additional system parameters....84
Configure HA for new installations....85

Appendix A: Add Storage Capacity....88
Prepare system for storage expansion....88
Add Cache Tier storage....88
Install and connect the new storage....91
Power cycle DS60 shelves....91
Add a new disk pack to an existing DS60....92
Locate the target enclosure in the rack....92
Identify the first empty disk pack in the target enclosure....92
Opening the console....93
Removing the front bezel....93
Pulling the shelf chassis out....94
Add new disks....95
Close the shelf chassis....95
Verify and configure the new disks....96
License the new storage with electronic licensing....99
Expand the file system....100

Figures

1 Warning about lifting the system 10
2 Adjusting the lift arm bar to just under 17 inches 11
3 Reconfiguring the portable lift with the Voyager conversion kit 12
4 Warning about lifting the system 13
5 Rail bracket inside 14
6 Rail bracket outside 14
7 Cable management assembly (CMA) 15
8 Insert screw in the back 16
9 Insert screw in the front 16
10 Attach bracket to front of rack 17
11 Adapters 18
12 Attaching the front rail with the screw 18
13 Attach front rail adapter 19
14 Warning about lifting the system 20
15 System on a rack 20
16 Location of serial number tag 22
17 Data Domain CMA back 23
18 Data Domain cable management assembly back inside 23
19 Rear of the rack mount rail 24
20 Holes for alignment pins 26
21 Installing the rails 26
22 Attaching the rail to the rack 29
23 Sliding the enclosure onto the rails 29
24 Rail tabs securing the rear of the enclosure 30
25 Securing the front of the enclosure 30
26 Rail installation 32
27 Installing the right rail to the rear channel 33
28 Installing the right rail to the front channel 33
29 Sliding the shelf chassis into the rails 35
30 Unlocking the casters 35
31 Locking the casters 36
32 Removing the straps 36
33 Inserting and securing the shelf to the cabinet (shoulder screw configuration) 37
34 Removing semi-captive screws 38
35 Installing ears to rack using truss head screws 38
36 Installing top cover using truss head screws (shelf and rack not shown) 38
37 Removal of semi-captive screws 39
38 Blue tab on rail must be pushed in 40
39 Installing and securing the rails—front 41
40 Installing and securing the rails—rear 41

41 Installing tray 41
42 Spring clips—push up to release tray 42
43 Opening the cable chain lids 42
44 Cable positioning in cable chains 42
45 1-Inch graduation label 43
46 Attaching cable chains to tray 43
47 Installing the chassis bracket into the shelf 43
48 Installing the chassis bracket 44
49 Installing the bezel 44
50 Screw and nut placements 45
51 18"-22" marking 46
52 26"-30" Marking 46
53 30"-34" Marking 47
54 Rail installation 48
55 Removing shipping tape 49
56 Securing a rail with a single screw 50
57 Location of securing screws and alignment pins 50
58 Nutbar installation (Left nutbar shown) 51
59 Node 0 SAS I/O module to ES30 host port connector 54
60 Node 1 SAS I/O module to ES30 expansion port connector 55
61 Cables for ES30 to ES30 connections 56
62 DD9800 with ES30 shelves 58
63 DD9800 with ES30 shelves, HA (one rack) 60
64 DD9800 with ES30 shelves, HA (two racks) 62
65 DD9800 with ES30 shelves, DD Cloud Tier or HA and DD Cloud Tier 64
66 DD9800 with ES30 shelves, ERSO 66
67 SAS I/O module to DS60 connector 67
68 DD9800 with DS60 shelves 69
69 DD9800 with DS60 shelves, HA 71
70 DD9800 with DS60 shelves, DD Cloud Tier 73
71 DD9800 with DS60 shelves, HA and DD Cloud Tier 75
72 DD9800 with DS60 shelves, ERSO 77
73 DD9800 HA interconnect 78
74 Power LED and power button 82
75 Removing a disk filler module 89
76 Installing a disk 90
77 Opening the console 93
78 Removing the front bezel 94
79 Pulling the Chassis Out (Two shoulder Screw Configuration) 94
80 Installing a disk 95

Tables

1 rail kit ... 26
2 Pins for third-party racks ... 31
3 Truss head screws ... 37
4 Pins for third-party racks ... 47
5 Parts list ... 48
6 Parts list ... 50
7 List of parts used in nutbar installation illustration ... 51
8 Cables for node 0 to ES30 shelf loop ... 55
9 Cables for node 1 to ES30 shelf loop ... 55
10 ES30 to ES30 cable options ... 56
11 DD9800 with ES30 ... 57
12 DD9800 with ES30 HA primary node cabling instructions (one rack) ... 59
13 DD9800 with ES30 HA standby node cabling instructions (one rack) ... 59
14 DD9800 with ES30 HA primary node cabling instructions (two racks) ... 60
15 DD9800 with ES30 HA standby node cabling instructions (two racks) ... 61
16 DD9800 with ES30 DD Cloud Tier or HA and DD Cloud Tier primary node cabling instructions ... 62
17 DD9800 with ES30 DD Cloud Tier or HA and DD Cloud Tier standby node cabling instructions ... 63
18 DD9800 with ES30 ERSO ... 64
19 Cables for node 0 and node 1 to DS60 shelf loop ... 67
20 DD9800 with DS60 ... 68
21 DD9800 with DS60 HA primary node cabling instructions ... 70
22 DD9800 with DS60 HA standby node cabling instructions ... 70
23 DD9800 with DS60 DD Cloud Tier ... 72
24 DD9800 with DS60 HA and DD Cloud Tier primary node cabling instructions ... 74
25 DD9800 with DS60 HA and DD Cloud Tier standby node cabling instructions ... 74
26 DD9800 with DS60 ERSO cabling instructions ... 76
27 Communications settings ... 81

1

Introduction and Preparation

Topics:

- Document purpose
- Tools and supplies needed
- Safety information
- Working with a portable lift

Document purpose

This installation guide provides instructions for installing the hardware associated with PowerProtect systems. Systems are shipped to the customer site either pre-installed in a rack (factory-racked) or as separate components to install in an existing rack at the site (field-installed). This guide provides instructions for both types of installation.

This document is intended for customers or Dell EMC Support personnel who are qualified to install PowerProtect systems.

Field-installed systems

To install PowerProtect systems in an existing rack at the customer site, follow all the instructions in this document to rack, cable, and configure the system.

Factory-racked systems

Factory-racked systems are pre-installed in the rack with the cables already connected. Follow the instructions in Configure System for Use on page 81 to configure factory-racked systems.

The following documents, available from the Online Support website, provide additional information about factory-racked systems:

- *Dell EMC 40U-P Cabinet Site Preparation Guide*
- *Dell EMC 40U-P Cabinet Unpacking and Setup Guide*
- *Dell EMC Titan S Site Preparation Guide*
- *Dell EMC Titan S Unpacking and Setup Guide*
- *Dell EMC Data Domain Rack Service Guide*

Tools and supplies needed

These tools and supplies may be helpful for the installation and setup tasks for Data Domain systems.

- Null modem cable (DB-9 female to female), plus spare
- USB-to-DB-9 serial (male connector) converter cable if the laptop does not have a serial port, plus spare
- Power adapter, C13 to NEMA 5–15 (if based in North America), or a power cord for your laptop power adapter with a C13 plug, so that you can power your laptop from a rack PDU
- Antistatic wrist strap and conductive foam pad
- Screwdrivers:
  - Phillips #2 with a 12 in. or longer blade
  - Phillips #2 (standard-length blade)
  - Phillips #1
  - Flat head 3/16 in.
  - Flat head 1/4 in.

- Torx T10
- Flashlight
- Needle nose pliers
- Diagonal wire cutters (for cutting tie wraps)
- 2 GB or greater USB flash memory drive
- Tie wraps (4 in. and 8 in.)
- (recommended) Roll of 5/8 inch Velcro cable tie material (3M Scotchmate SJ-3401 or similar)

Safety information

CAUTION:

- **If the system is used in a manner not specified by the manufacturer, the protection provided by the equipment may be impaired.**
- **The RJ45 sockets on the motherboard, PCI cards, or I/O modules are for Ethernet connection only and must not be connected to a telecommunications network.**

Review this list of important safety recommendations.

- All plug-in modules and blank plates are part of the fire enclosure and must be removed only when a replacement can be added immediately. The system must not be run without all parts in place.
- A DD9800 system must be operated only from a power supply input voltage range of 200–240 VAC and 50–60 Hz. ES30 shelves use 100-240 VAC and 50–60 Hz. DS60 shelves use 200–240 VAC and 50–60 Hz.
- Each component is intended to operate with all working power supplies installed.
- Provide a suitable power source with electrical overload protection.
- A safe electrical earth connection must be provided to each power cord. Check the grounding of the power sources before applying power.
- The plug on each power supply cord is used as the main device to disconnect power from the system. Ensure that the socket outlets are located near the equipment and are easily accessible.
- Permanently unplug the unit if you think it is damaged in any way and before moving the system. A DD9800 system includes four power supplies. To completely remove system power, you must disconnect all four power supplies.
- The power connections must always be disconnected prior to removal or replacement of a power supply module from any of the components in the system.
- A faulty power supply module must be replaced within 24 hours.
- Do not lift system components by yourself. A DD9800 system weighs up to 117 lbs (53.2 kg), an ES30 expansion shelf weighs up to 68 lbs (30.8 kg), and a DS60 shelf weighs up to 225 lbs (90.7 kg).

  CAUTION: Data Domain systems are heavy. Use at least two people or a mechanical lift to move any system.
- Do not lift an expansion shelf by the handles on any modules. The handles are not designed to support the weight of the populated shelf.
- To comply with applicable safety, emission, and thermal requirements, covers must not be removed and all bays must be fitted with plug-in modules.
- Once removed from the shipping box, it is ok to lift the DD9800 system or the chassis with the four handles to place in a rack. You will need to remove the handles from the sides before sliding the system in the rack. The four handles should be saved for later use.

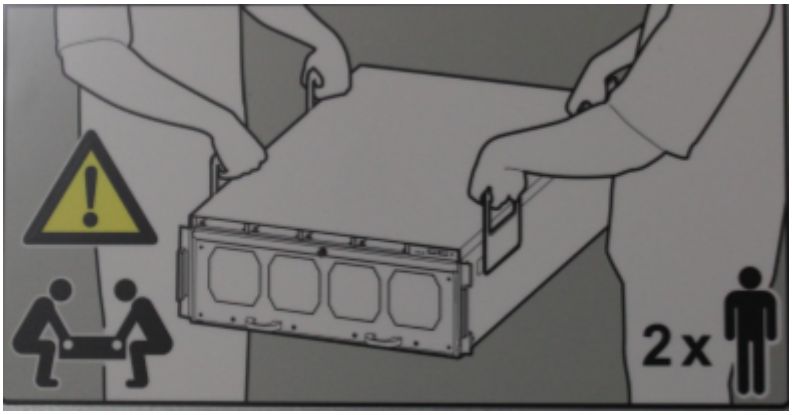

Figure 1. Warning about lifting the system

- Load the rack with storage shelves beginning at the bottom and the DD9800 system in the designated location to prevent the rack from becoming top-heavy.
- For ESD protection, Data Domain recommends that you wear a suitable antistatic wrist or ankle strap. Observe all conventional ESD precautions when handling plug-in modules and components.
- Do not extend components on slide rails until you have loaded at least three or more similarly weighted items in the rack, or unless the rack is bolted to the floor or overhead structure to prevent tipping.

Working with a portable lift

If you are installing the shelf with all field replaceable units (FRUs) removed, you can install the shelf without using a lift. If you need to install the shelf with FRUs onboard, use a portable lift.

Service personnel generally use the portable lift manufactured by Alum-A-Lift. Instructions for this lift are included in the lift kit.

NOTE: If you are using a portable lift other than the Alum-A-Lift, adapt these instructions as necessary while following all required safety requirements.

Lift requirements

For installations in racks that are 28U (49 inches) or less above the floor, use the lower mast, which is rated for 400 pounds.

For installations in racks that are more than 28U (49 inches) above the floor, use the lower mast configuration and a support table with the "Voyager" conversion kit, which is rated for 225 pounds.

Adjusting the arms for a frontal lift

About this task

If you plan to use the mechanical lift directly in front of the cabinet, adjust the width of the lift arm/tray to just under 17 inches to ensure that the arms will stay under the chassis.

Steps

1. Adjust the two arms with rollers so that they are 17 inches apart measured from the outside edges.
2. Tighten the arms to secure them.

   The following figure shows an example of adjusting the lift arm/tray to just under 17 inches.

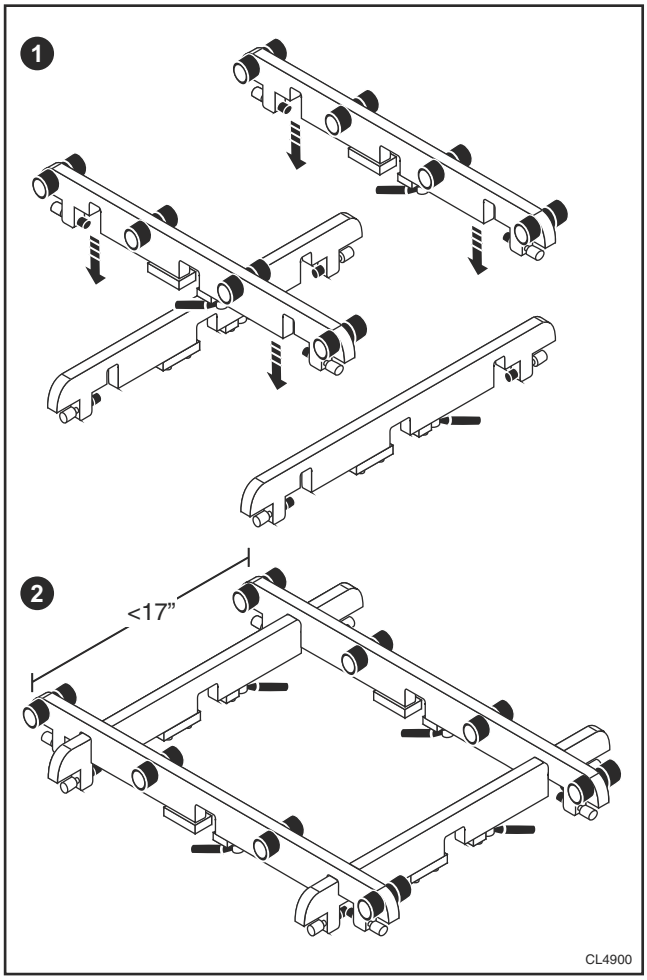

Figure 2. Adjusting the lift arm bar to just under 17 inches

Reconfiguring the lift with the Voyager kit

About this task

If you are using the Alum-A-Lift to install or remove components above 49 inches (28U) from the floor, use the single (lower) mast configuration with the Voyager conversion kit and support table.

Steps

1. Unpack the Voyager kit.
2. Use the instructions provided within the kit to reconfigure the lift.

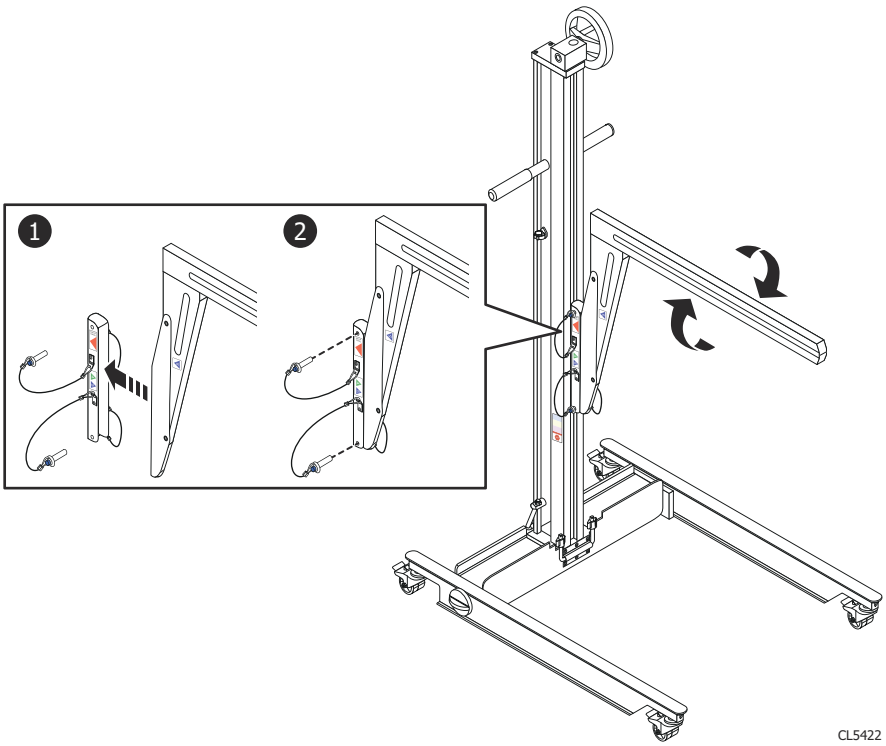

Figure 3. Reconfiguring the portable lift with the Voyager conversion kit

2

Install the System in the Rack

CAUTION: Improper installation on the rails may damage the rails or cause the system to fall when extended. When extending the system from the rack, pull outward slowly and verify the system is properly installed on the rails.

Topics:

- Unpack the system
- Install the rack brackets
- Install the DD9800 system into a rack
- Mount the cable management assembly
- Installing the expansion shelves into the racks

Unpack the system

1. Remove the accessories and rail mount kit from the shipping packages.
2. Remove the controller and the bezels from the shipping packages.

   NOTE: For field installations, the controller has temporary handles pre-fitted at the factory to help in removal of the system from the box and for placing it in a rack. While the controller is being placed in a rack, the handles attached to the chassis can be removed by loosening the thumbscrew on each handle. The handles must be saved for future use.

   CAUTION: Data Domain systems are heavy. Always use two people or a mechanical lift to move a system. The chassis displays warning labels.

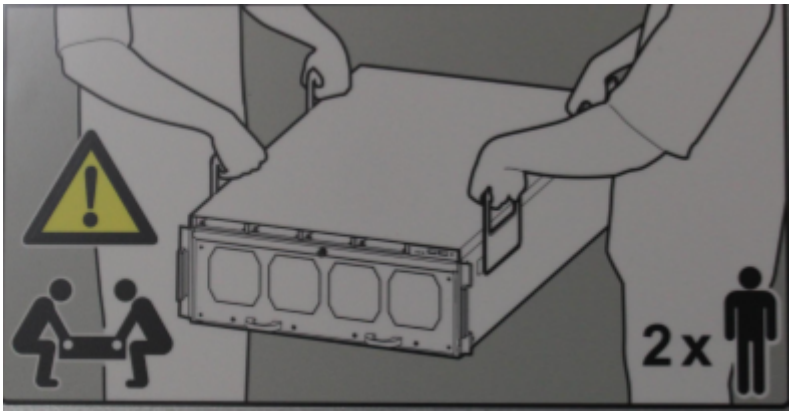

Figure 4. Warning about lifting the system

3. Remove expansion shelves and their bezels from the shipping packages.

Install the rack brackets

Data Domain systems are installed into racks using the rail bracket hardware.

Shelf brackets and cable management assembly

The rack mounting kits are compatible with racks that have front-to-rear post spacing between 24 inches and 36 inches. The hardware fits the following types of mounting holes:

- 7.1 mm round holes
- .375 inch / 9.2 mm square holes
- M5, M6, 12-24, and 10-32 threaded holes

The controller rail kit includes the following items:

- Two bracket assemblies, one marked for the left side and one marked for the right side of the rack



Figure 5. Rail bracket inside

1. Left inside bracket
2. Right inside bracket



Figure 6. Rail bracket outside

1. Left outside bracket
2. Right outside bracket

A cable management assembly (CMA), for organization of cables at the rear of the system, is already installed onto the DD9800 system on a Data Domain rack. For field installed systems, the CMA is shipped with the DD9800 system.

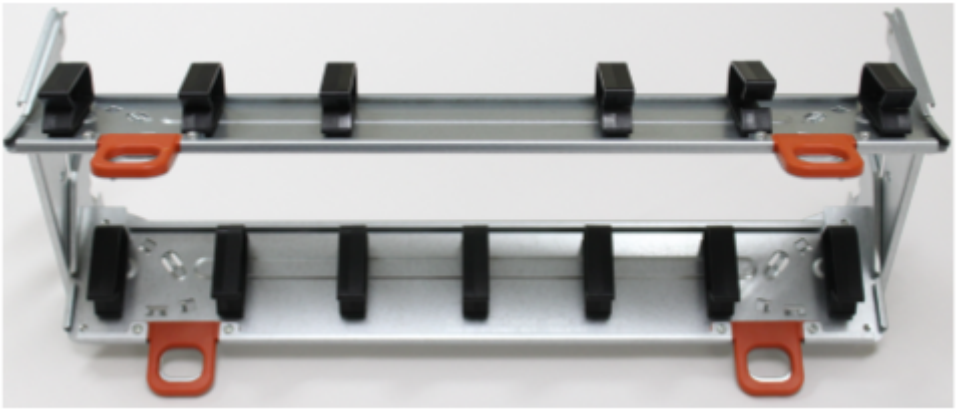

Figure 7. Cable management assembly (CMA)

Install rail brackets on the Data Domain racks (for square or round hole racks)

About this task

NOTE:

- Do not hold the bracket assembly in a vertical position as the parts may separate.
- If you are using a rack with threaded holes, skip this section and go to Install rail brackets using the adapter hardware (for threaded hole racks) on page 17 section.
- The Data Domain system is 4 rack units (RU) tall so make sure the location in the rack fits the product. Attach the bracket assembly to the lowest RU of the 4-RU opening.
- To comply with Data Domain rack mounting guidelines, the system controller should be installed in the pre-defined space in the rack for system controllers. Refer to the *Installation and Setup Guide* for your system.
- For HA systems:
  - Mount node 0 such that the bottom of the chassis aligns with the 13U mark in the rack.
  - Mount node 1 such that the bottom of the chassis aligns with the 18U mark in the rack.

Steps

1. At each rack post, determine the vertical position in the rack where the brackets are to be installed. The top-most mounting hole for a particular rack unit (RU) mounting position is typically identified by a mark or hole. The bracket will be installed in the bottom hole of the 4 RU opening.

   CAUTION: If the bracket is mounted in holes that are not vertically aligned from front to back, the bracket may be damaged and mounting will not be secure.

2. As needed, select the bracket marked right or left. The rear of the bracket contains an adjustable piece.
3. From the rear of the system, hold the bracket against the inside of the rack posts. Align the rear guide pin and slide the bracket towards the front. The guide pins can help to temporarily hold the rack mount bracket in place. Attach the bracket to the rear of the rack using the furnished screws. There are five screw holes. The picture shows two screws attached to the rear rack post.

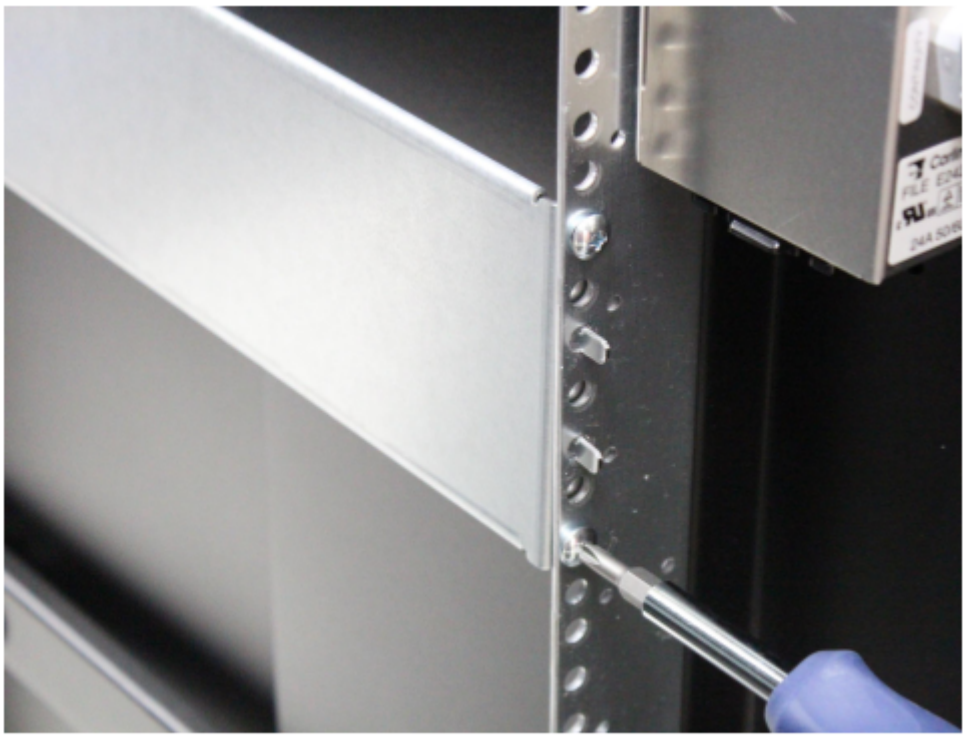

Figure 8. Insert screw in the back

CAUTION: If the bracket is mounted in holes that are not vertically aligned from front to back, the bracket may be damaged and mounting will not be secure.

4. Pull the adjustable sliding part of the bracket towards the front until it is close to, but not touching, the front of the rack.



Figure 9. Insert screw in the front

5. Attach the front of the brackets with two screws each in the two middle holes (innermost holes) as shown in the picture.



Figure 10. Attach bracket to front of rack

6. Verify that the bracket is level.
7. Repeat the steps to attach the remaining bracket to the other side of the rack.
8. After installing both brackets, make sure that they are level with one another.

Install rail brackets using the adapter hardware (for threaded hole racks)

About this task

NOTE:

- If you are using a rack with square or round holes, go to Install rail brackets on the Data Domain racks (for square or round hole racks) on page 15 section.
- Only use this procedure if your rack has tapped holes that are M5, M6, 10/32, or 12/24.
- The adapter hardware is shipped in the rack mount kit.
- You will need a long handled screwdriver with a shank diameter less than 7.0 mm and the wrench (included in the kit) to tighten the nuts.

Steps

1. Locate the two adapters from the rail kit.

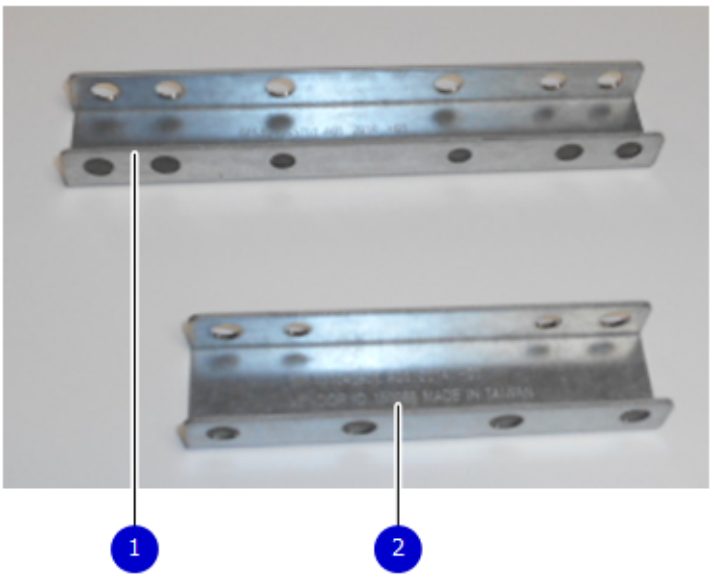

Figure 11. Adapters

1. Long adapter
2. Short adapter

2. Attach the long adapter to the front of each rail using M5 screws.

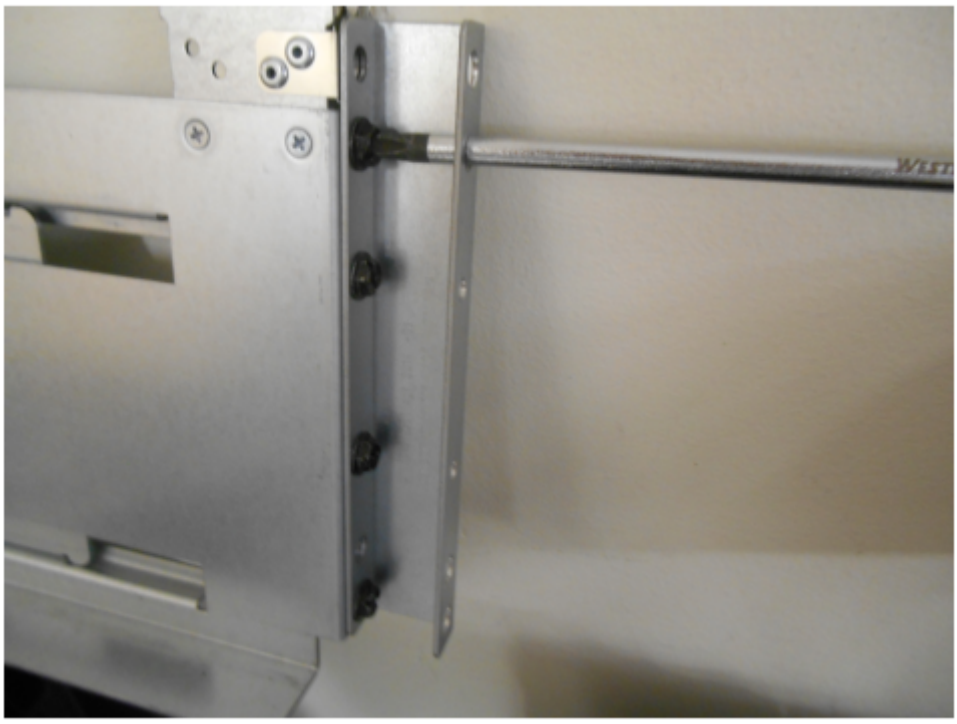

Figure 12. Attaching the front rail with the screw

3. Attach the small adapter to the rear of each rail using M5 screws.
4. At each rack post, determine the vertical position in the rack where the rails are to be installed. The top-most mounting hole for a particular rack unit (RU) mounting position is typically identified by a mark or hole. Racks may also be screen-printed to show the positions of the rack units.

NOTE:

- To comply with Data Domain rack mounting guidelines, the system controller should be installed in the pre-defined space in the rack for system controllers. Refer to the *Installation and Setup Guide* for your system.

- Two people may be required to attach the rail/bracket assembly to the rack.

5. Install the screws supplied in the adapter kit to the rack. For example, the 10-32 threaded hole rack would require the installation of the 10-32 screws. Install the screws in the appropriate locations until they are tight against the rack.
6. As needed, select the bracket marked right or left. Orientation assumes you are facing the front of the rack.
7. Slide the adjustable part of the bracket partly open.
8. Attach the first rail to the rack as follows:
   a. Hold the rail against the inside of the rack with the rear bracket flush with the rear of the rack. Use the screws threaded into the rack to hold the rear of the rail kit in place.
   b. Pull the front of the rail until it is flush with the inside of the rack front.
   c. Attach the rails to the rack by installing the appropriate nuts onto the screws threaded into the rack. Use the supplied wrench to tighten the nuts. Do this for the front and rear of the rail kit.
   d. Attach the rear of the rail/bracket assembly to the rear of the rack. Secure each screw.

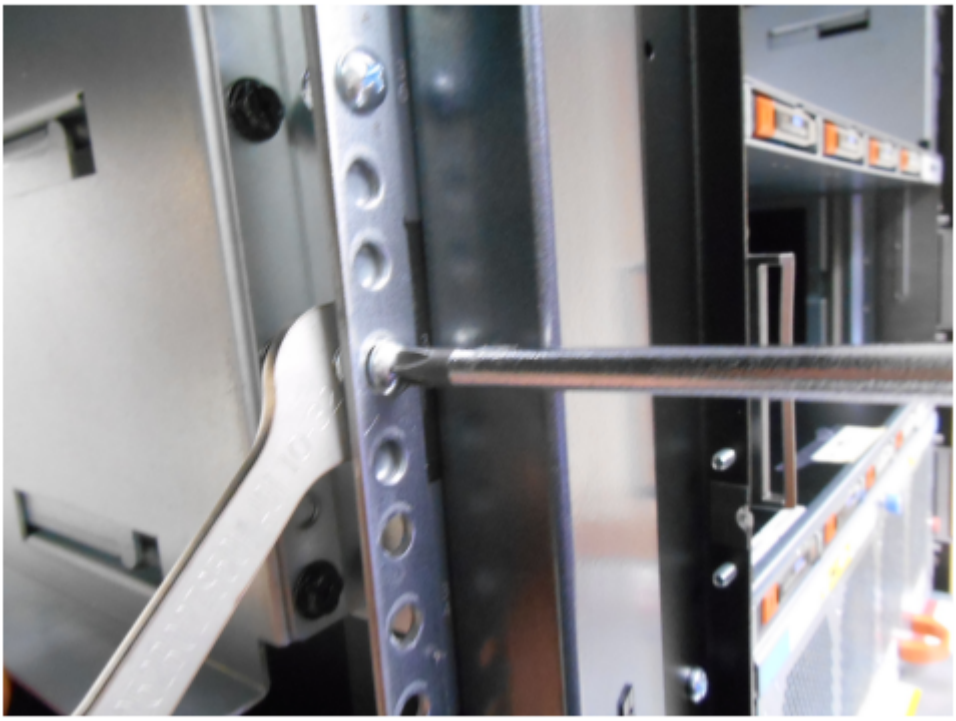

Figure 13. Attach front rail adapter

9. Repeat the steps for the second rail.
10. After installing both rails, make sure that they are level with one another.
11. For HA systems, repeat this procedure for the second node.

Install the DD9800 system into a rack

About this task

CAUTION: Data Domain systems are heavy. Always use two people or a mechanical lift to move a system. The chassis displays warning signs.

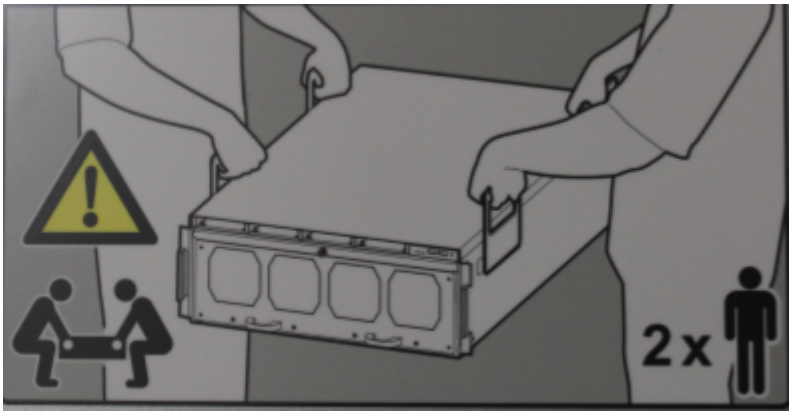

Figure 14. Warning about lifting the system

CAUTION:

- **Do not apply AC power to the DD9800 system controller until all expansion shelves and cables are installed.**
- **Make sure the PSNT label, attached to the left rear of the chassis is not damaged or snagged during the installation of the system into the rack.**

Steps

1. Identify the designated location for the system controller in the rack.
   - The designated location for a single node, or the primary node of an HA pair with ES30 shelves is U13-16 in rack 1.
   - The designated location for the standby node of an HA pair with ES30 shelves is U18-21 in rack 1 (single rack) or U13-16 in rack 2 (multiple racks).
   - The designated location for a single node with DS60 shelves is U23-26 in rack 1.
   - The designated location for the primary node of an HA pair with DS60 shelves is U22-25 in rack 1.
   - The designated location for the standby node of an HA pair with DS60 shelves is U27-30 in rack 1.

   NOTE: The designated slots in the rack are the recommended location for the DD9800 system to support the cabling described in this document. Other locations may require different cable lengths for some configurations.
2. From the front of the rack, lift the DD9800 system using the handles supplied for lifting to install the system in the rack in the correct location.
3. At each side, align the bottom of the chassis with the lip of each installed rack bracket.
4. Carefully slide the chassis into the rack and remove the back handles while supporting the chassis weight. Continue to slide the rest of the chassis and remove the front handles. Finally, push the chassis all the way into the back of the rack.
5. The rear of the chassis should engage with the tabs located in the rear of the rack mount kit.
6. At the front, attach the system to each installed bracket using the screws on the front of the system. The screws are shown in red circles in the photo.

   NOTE: On each side of the chassis, a bezel bracket sits between the upper and lower screws that secure the chassis to the rack. The bezel brackets are marked with left and right to denote which side of the chassis to install them on. However, the brackets for each side are not physically different. Inverting the bracket allows it to be used on the other side of the chassis.

Figure 15. System on a rack



7. Check the PSNT label at the rear of the chassis.



Figure 16. Location of serial number tag

8. Repeat these steps to install the second node.

Mount the cable management assembly

A cable management assembly (CMA), for organization of cables at the rear of the system, is already installed onto the DD9800 system on a Data Domain rack.

For field installed systems, the CMA is shipped separately.

NOTE: For non-Data Domain racks, it is acceptable to use the cable management products provided by the rack vendor.

Install the Data Domain cable management assembly

Steps

1. Take out the cable management assembly (CMA) from its packaging.
2. Locate the two blue knobs (on the left and right sides of the CMA) in the back which you will need to pull away from the side of the CMA brackets to install the CMA in the rack.



Figure 17. Data Domain CMA back

3. Pull the knobs away from the side of the CMA brackets towards the direction of the white arrow (see picture) and turn the blue knobs in the direction of the yellow arrow (on the left and right sides of the CMA) so the tip of the knob is pulled away from the side of the bracket to fit in the rail slot.

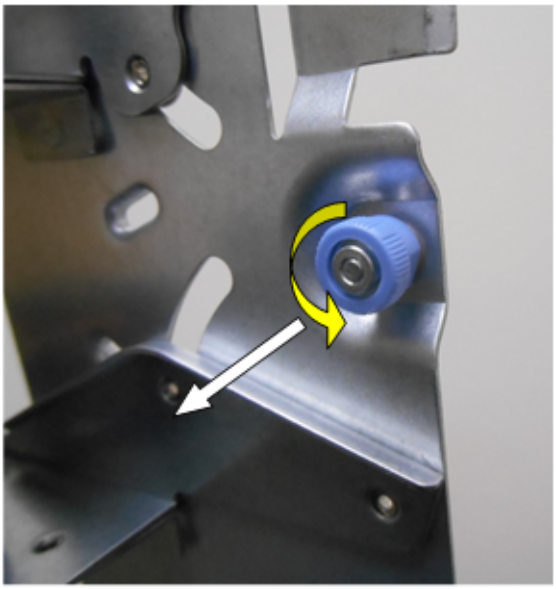

Figure 18. Data Domain cable management assembly back inside

4. Locate the slots and the hole in the Data Domain rail to attach the CMA by following the arrows in the picture. Align and insert the CMA tabs in the slots and the blue knob in the hole of the rail bracket on both sides.

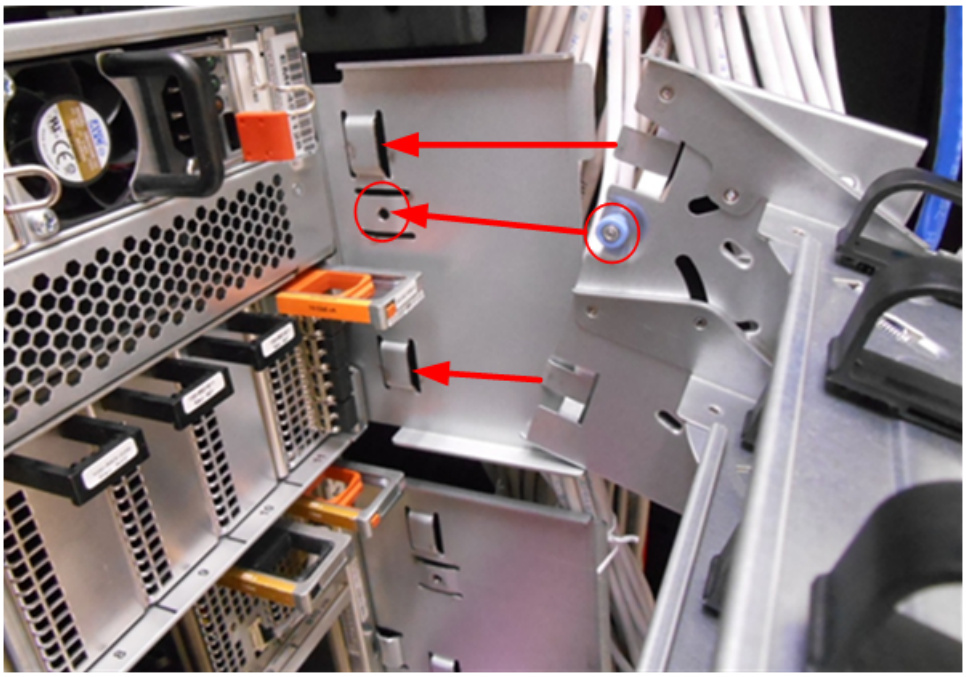

Figure 19. Rear of the rack mount rail

5. Insert cable management assembly into rear of rack mount rails.
6. When the cable management assembly is securely installed into the rack mount rails, then rotate the two blue knobs clockwise or counterclockwise to lock the cable management assembly into the rack mount rails.
7. To adjust the CMA position up or down, pull on the orange latches and pull up or down on the arm simultaneously as needed for accessing the power cables.

   NOTE: You do not need to remove the CMA to access the I/O modules, the managements module, and the powers supply units for removal and replacement. Just adjust the CMA arms.

8. For HA systems, repeat this procedure to install the CMA for the second node.

Installing the expansion shelves into the racks

CAUTION:

- **Data Domain systems are heavy. Always use two people or a mechanical lift to move and install a Data Domain system. Use caution to install the expansion shelves.**
- **Ensure that each rack is securely anchored to prevent tipping.**

1. From the front of a rack, lift the shelf to the designated rack location.
2. Add shelves to the racks in order, one at a time, from the bottom of a rack to the top filling each string in that rack before going to the next.

   NOTE: Strings in add-on racks may connect to the same string number in other racks.

   Shelves are added in the order V1.1, V1.2, V1.3, V1.4, V2.1, V2.2, and so on. Shelves are labeled VN.M. VN refers to string "N" and the "M" is the number of the shelf in the string. For example, V3.2 refers to the second shelf in the third string.
3. Secure each expansion shelf in the rack.
4. When installing an SSD shelf for Data Domain metadata on flash:
   - The SSD shelf counts towards the total number of shelves connected to the system.
   - Data Domain recommends installing the SSD shelf in the V1.1 positon, but if that is not possible, the shelf can be placed in a different location in the rack so long as cables of sufficient length are available.

     NOTE: V1.1 is recommended for better performance because this will the 1st hop where data will be written. If the SSD shelf is connected to the last enclosure in a chain, then each read/write request has to go through many hops, which introduces latency issues when compared to when the SSD shelf is on the 1st shelf of a chain.

3

Install the Disk Shelves in the Rack

Topics:

- Remove filler panels
- Install an ES30 or FS15 shelf into the rack
- Install a DS60 shelf into the rack

Remove filler panels

The front space of the rack into which you will install the shelf is usually covered by a filler panel. If one or more filler panels cover the space where you want to install the shelf, use this procedure to remove each panel.

Steps

1. On the filler panel, slide the left and right securing tabs to the open position (towards the center of the panel).

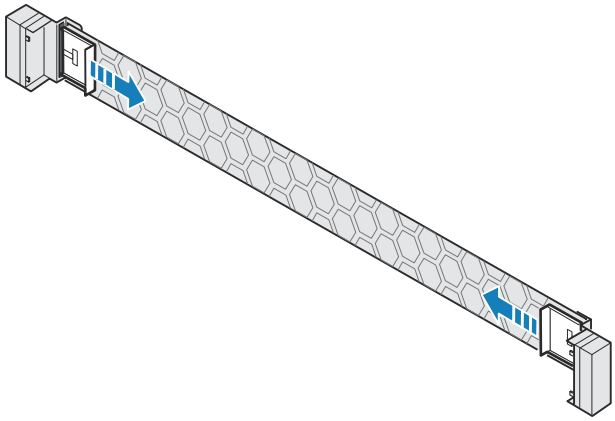

2. Remove the filler panel from the cabinet.

Install an ES30 or FS15 shelf into the rack

Complete the following steps to install an ES30 expansion shelf or an FS15 SSD shelf.

Racking and cabling

EMC has adopted recommended racking guidelines.

To provide the best trade-off in terms of serviceability, system expansion, and cabling, mount the controller starting above the first set of shelves in the rack—usually 13U for most systems.

You can connect the 2-meter cable attached to the controller to any shelf in the same rack. Install filler panels in unused rack openings.

After your hardware is installed, route and organize cables by affixing them to the side of the rack to facilitate servicing.

Although you can plan for growth by leaving empty positions in the rack, this method is safe only if the rack is securely bolted to the floor, or if the resulting configuration has a low center of gravity. When in doubt, do not leave empty spaces, and populate based on the guidelines in this section.

Rail kit

One of each of these items is included with each shelf.

Table 1. rail kit

Rail kit	Rack depth
Slide Rail Kit,	20.5-34 inches (52-86.4 cm)
Rail Adapter Kit	Supports racks to a depth of 36 inches (91.4 cm) and supports racks with threaded holes.

NOTE: The rail adapter kit is not required for shelves in a pre-configured rack that come with fixed rails.

Installing the rails in the cabinet

About this task

NOTE: The front edge of each rail is stamped L or R for left or right side, when the rail faces the cabinet front.

Install each rail in the cabinet.

Steps

1. From the front of the cabinet, insert the rail alignment pins above and below the bottom U mark on the rear cabinet channel.

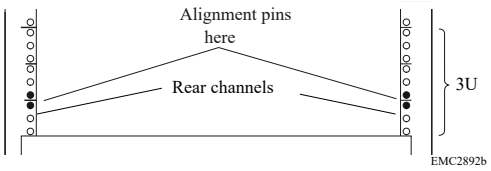

Figure 20. Holes for alignment pins

2. Pull the sliding rail to the front of the cabinet, and secure it to the front channel at the middle two holes of the rail using two of the provided screws.
3. Secure the rail to the rear channel loosely with two screws to allow for adjustment when you install the enclosure.

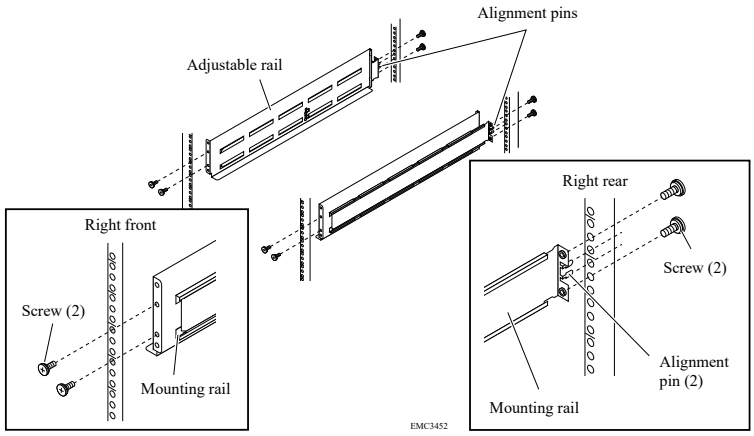

Figure 21. Installing the rails

Adjusting for various rack types

The standard rail components can accommodate racks with square or untapped round holes with a depth of 24 inches to 34 inches.

Using the rail adapter hardware, the following additional rack mounting types and depths can be accommodated:

- Racks with depths of 34 inches to 36 inches
- Racks with tapped holes, M6 or 12/24
- Racks with tapped holes, M5 or 10/32

Installing the rails using the adapter hardware

About this task

Only use this procedure if the rack is 34 inches to 36 inches deep and/or the rack has tapped holes that are M5, M6, 10/32, or 12/24.

The front edge of each rail is stamped L or R for left and right sides, when facing the front of the rack. Since the brackets cover these markings, make a note as to which rack is L and which rack is R.

Use a #2 Phillips screwdriver with a shank diameter less than 7.0 mm and the wrench that was included in the kit to tighten the nuts.

CAUTION: The adapter kit is only for static applications where the rack will not be moved. If the rack is to be moved, remove the shelves before moving the rack.

Steps

1. Attach a long bracket to the front of each rail using four M5 screws into the first (top), second, fourth, and sixth holes.

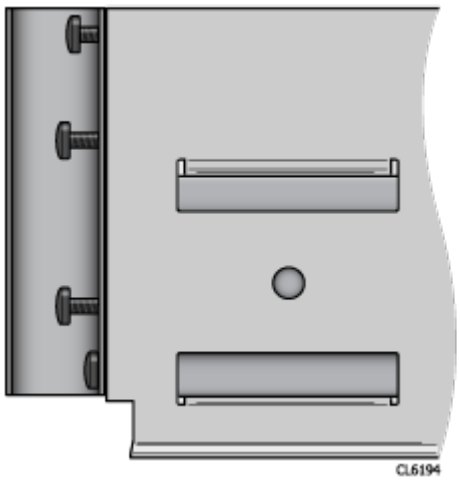

2. Attach a short bracket to the rear of each rail using two M5 screws into the top and bottom holes.

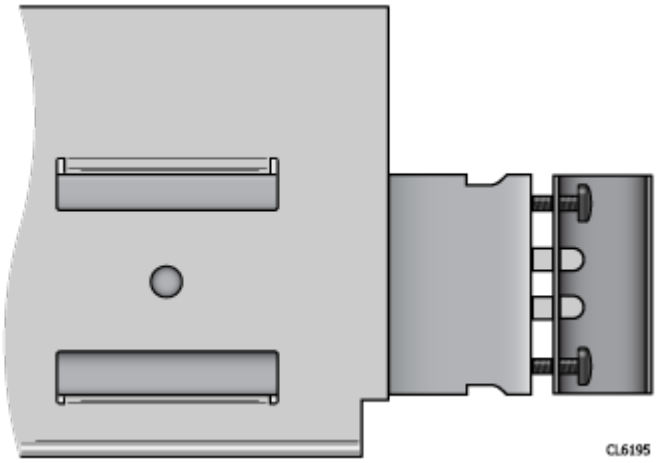

3. (M6 or 12/24 tapped holes racks only) Attach clip nuts.

   Slide two clip nuts onto the front bracket assembly at the top and bottom positions.

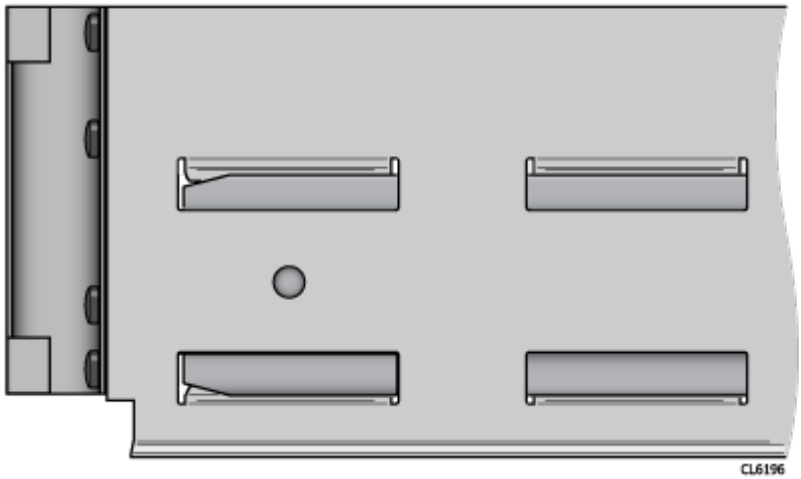

4. Determine the vertical position in the rack at each rack post where the rails are to be installed.

   The top-most mounting hole for a particular rack unit (RU) mounting position is typically identified by a mark or hole. Racks may also be screen-printed to show the positions of the rack units.

   NOTE: Two people may be required to attach the rail/bracket assembly to the rack.

5. Attach the first rail to the rack as follows:
   a. Hold the rail against the inside of the rack, with the rear bracket aligned with the rear of the rack.
   b. Pull the front of the rail until it is aligned with the inside of the rack front.
   c. Attach the front of the rail/bracket assembly to the front of the rack.

   For M6 or 12/24 tapped rack holes: insert M5 screws through the rack hole positions as shown in Attaching the rail to the rack on page 29. Secure the screws using the furnished nuts.

   For M5 or 10/32 tapped rack holes: partially screw in the screws into the rack hole positions as shown in Attaching the rail to the rack on page 29. Slide the rail kit over the exposed threads. These threads temporarily hold the rail kit in position while the kit length is being adjusted. Once the rail kit is set to the correct length, thread the mating nuts onto the exposed screws and tighten with a wrench.

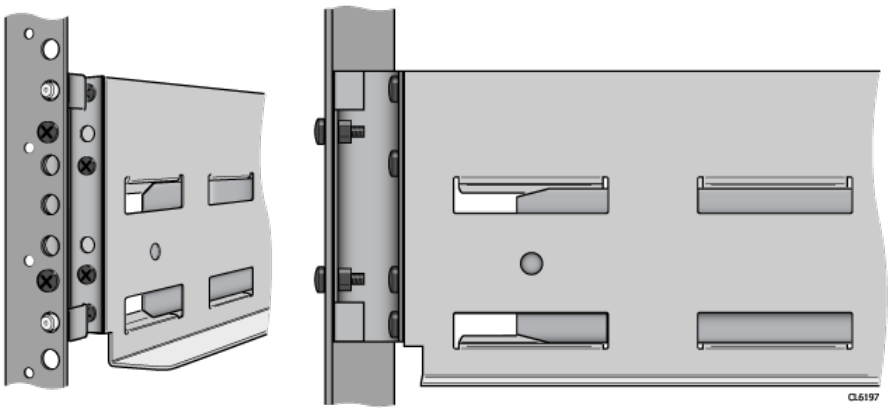

Figure 22. Attaching the rail to the rack

NOTE: To secure the rail adapter hardware nuts, you may need to use the supplied wrench or pliers to tighten the nuts.

6. Repeat step 5 for the second rail.
7. After installing both rails, ensure that they are level with one another.

Installing the shelf on the rails

About this task

WARNING:

The enclosure is heavy and should be installed into or removed from a rack by two people. To avoid personal injury and/or damage to the equipment, do not attempt to lift and install the enclosure into a rack without a mechanical lift and/or help from another person.

Steps

1. With help from another person, lift the enclosure and, from the front of the cabinet/rack, slide the enclosure onto the rails.

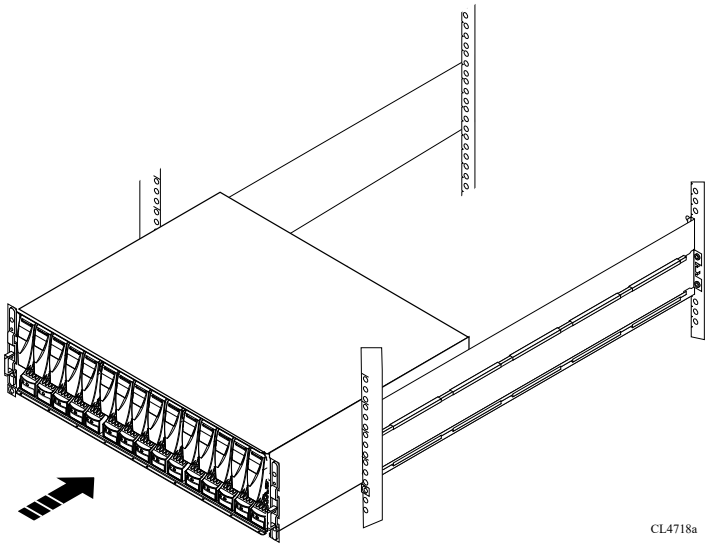

Figure 23. Sliding the enclosure onto the rails

When the enclosure slides to the back of the cabinet, the rear tabs on the rails insert into the two notches in the rear of the enclosure. The tabs secure and support the rear of the enclosure.

If the chassis does not slide all the way into the cabinet, you may need to further loosen the screws that hold the rear of the rails in place, then adjust the rails to allow the tabs to fit into the notches.

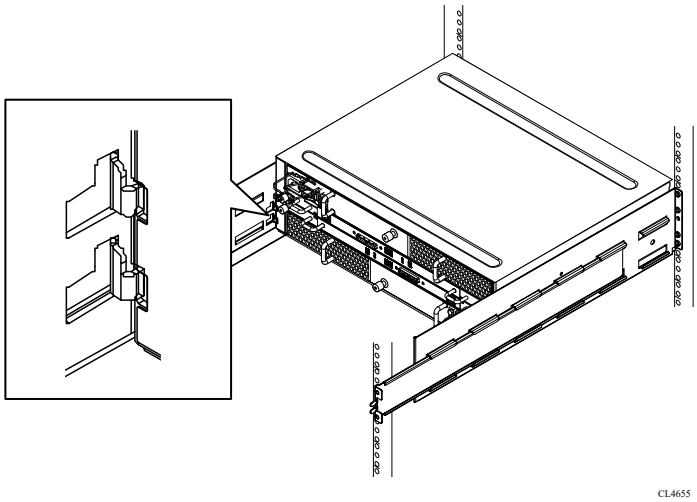

Figure 24. Rail tabs securing the rear of the enclosure

2. Once the enclosure is completely seated into the rear tabs, secure the enclosure, tighten the screws (two on each rail) that secure the rails to the channels.
3. Secure the front of the enclosure to the front vertical channels with four screws (two per side), but do not tighten the screws until they are all in place.

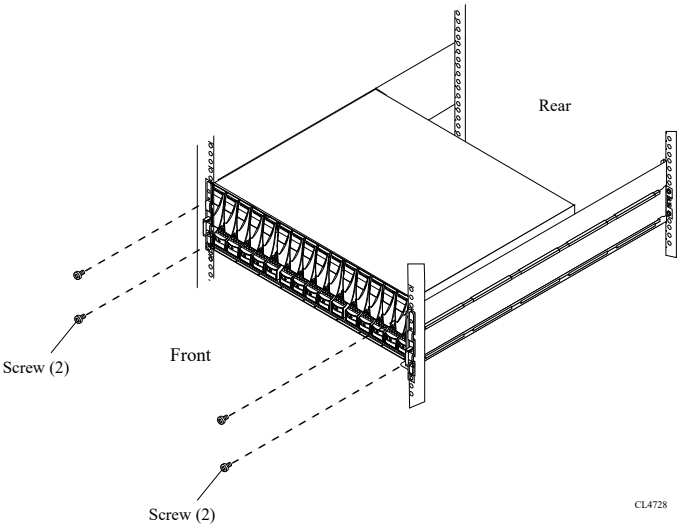

Figure 25. Securing the front of the enclosure

Install a DS60 shelf into the rack

Complete the following steps to install a DS60 expansion shelf.

CAUTION: If the top of the shelf is installed above 32U high, a ladder is required to replace disk drives in DS60 shelves.

Installing rails

About this task

Install the rails from the front of the cabinet where you will install the shelf. The 4U rack includes inner rails that slide into the cabinet rail assembly.

CAUTION: Exercise care when installing the short rails. Exposed metal edges may be sharp and could damage cabling or cause injury to personnel.

Steps

1. Locate the 4U high cabinet space designated for the shelf.
2. Adjust rail length if required.
3. The rails are shipped with M5 adapters, which fit into the Dell EMC NEMA channels. For Dell EMC racks, proceed to step 4. For third-party racks, proceed as follows:
   a. Using a flat-tipped screwdriver, remove the two M5 adapters from the adapter mounting block on the rails.
   b. Select the required adapters from the hardware kit and install the adapters into the adapter mounting block. The following table shows the pins for third-party racks.

Table 2. Pins for third-party racks

Rail Pins from kit	Part Number and Description	Suggested Use
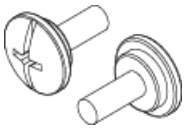	036-028-018 Custom screw, M4 x 10MM (Quantity: 4 per kit)	Used for any third-party rack. Can be used in racks with threaded holes.
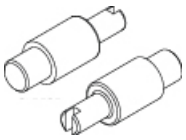	036-028-016 3.8MM Alignment Pin (Quantity: 8 per kit)	Used in racks that have M5, #10, or #12 threaded holes.
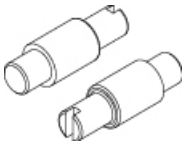	036-028-017 4.8MM Alignment Pin (Quantity: 8 per kit)	Used in racks that have M6 threaded holes.

4. Install the right rail to the rack rear channel. You can adjust the rails later, if necessary. The following figure shows the installation details.

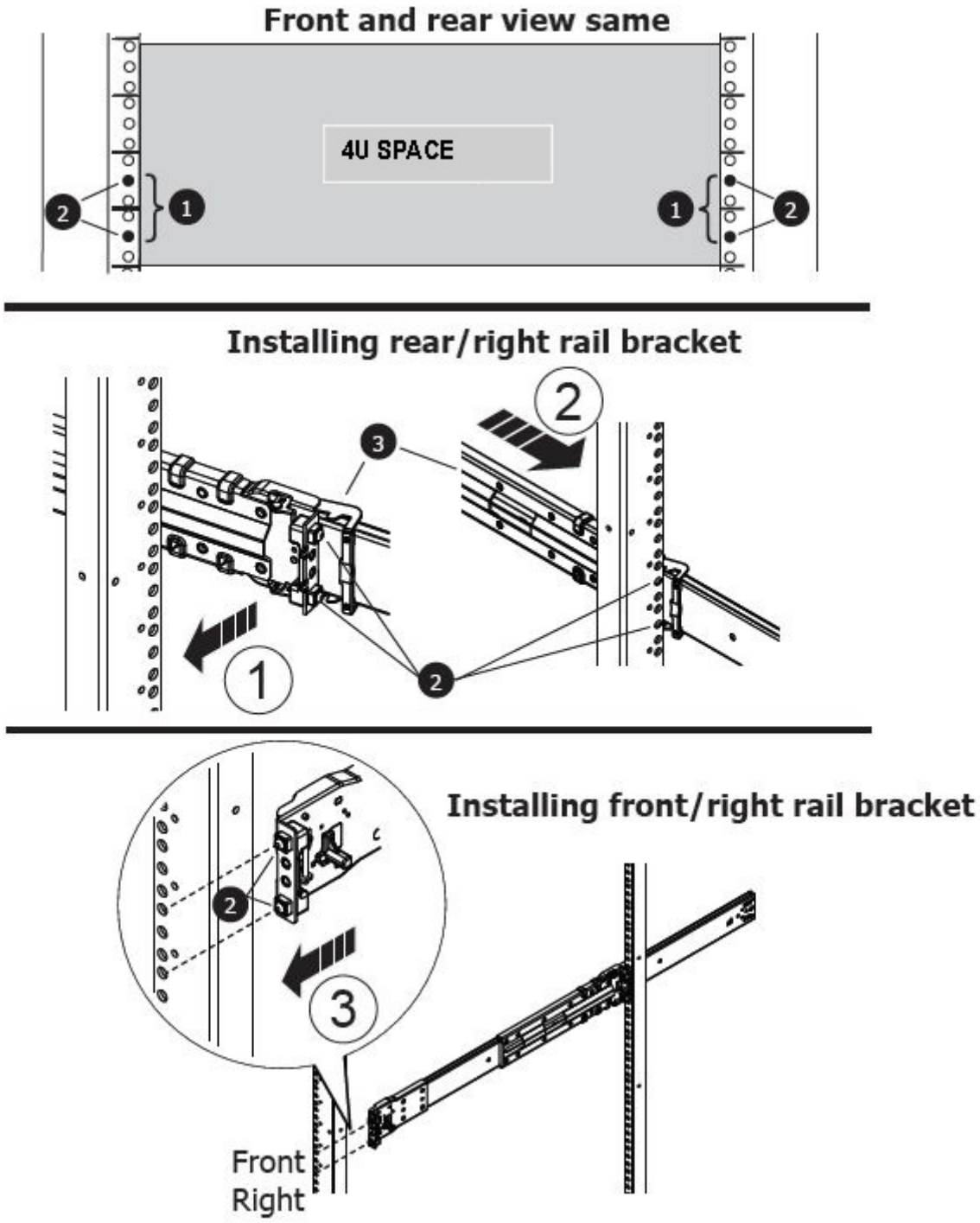

Figure 26. Rail installation

a. Align the right rail with the lower U of the allotted 4U space.

NOTE: Each of the rail alignment pins must be located in the middle holes of the bottom two U spaces of the 4U space.

b. With the release latch on the outer (rear) part of the rear channel, place the catch mechanism over the channel.
c. Push the rail back to secure the rail adapters in the cabinet channel. An audible click indicates that the rail is secure in the channel.
d. Make sure the rear post/catch mechanism is secure and attached.

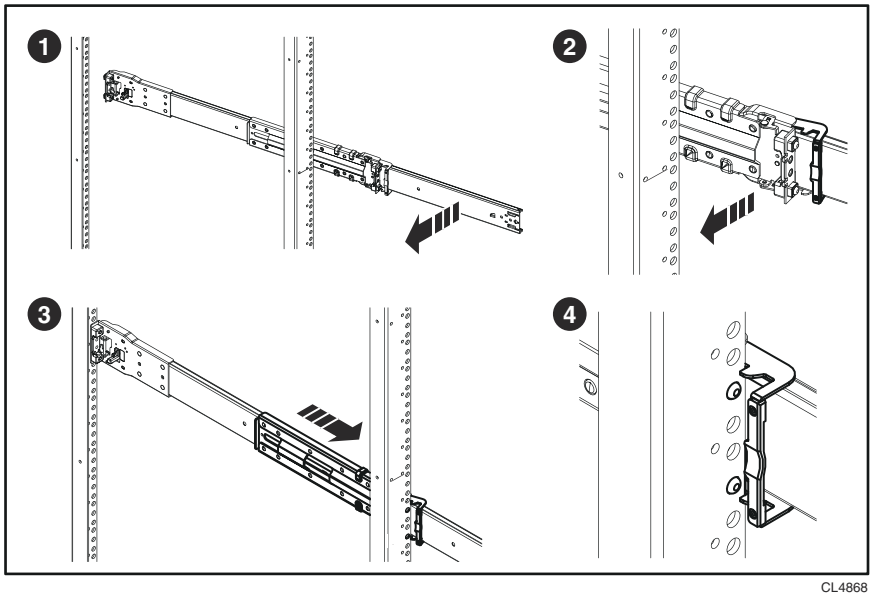

Figure 27. Installing the right rail to the rear channel

5. Install the right rail to the front channel.
   a. Align the front of the right rail so that it is level and the front rail pins are aligned with the middle holes of the bottom two U spaces of the 4U space.
   b. Pull the rail forward, with the adapters aligned with the middle holes of the bottom two U spaces of the 4U space.

      An audible click indicates that the connection is secure.

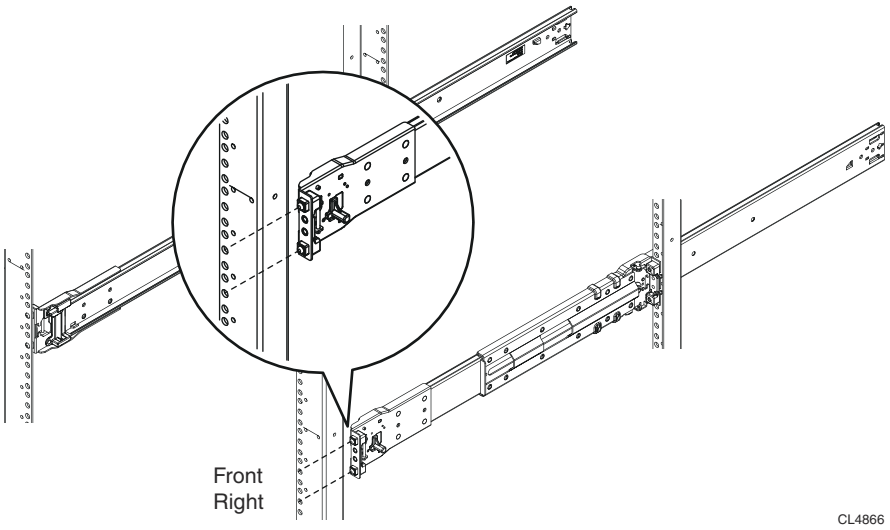

Figure 28. Installing the right rail to the front channel

6. Install the left rail by repeating step 3 or step 4.
7. On both left and right rail assemblies, install a single long screw between the rail posts in the upper screw hole to secure the rails as follows:
   a. For Dell EMC racks or racks that do not have threaded holes, insert a single M5 screw into the larger of the two screw holes.
   b. For third-party racks with threaded holes, insert the M4 screw into the smaller of the two screw holes. The screw is smaller than the threaded hole and will pass through the threads.

Installing the shelf onto the rails

Prerequisites

If you are installing an empty shelf (all FRUs removed), you can install the chassis without using a lift. If the shelf is populated with FRUs before installation, you must use a portable lift. Working with a portable lift on page 10 provides more information.

NOTE: DO NOT ATTEMPT to install a populated shelf without a mechanical lift. Attempting to install a populated shelf without a lift could damage the equipment and cause injury to personnel.

CAUTION: Only install a shelf into a cabinet that is equipped with anti-tip features.

NOTE: The following procedure shows an installation using the Alum-a-Lift portable lift. If another lift is being used, follow the manufacturer's instructions for that lift as applicable.

NOTE: A populated shelf requires two people and a lift to install. An unpopulated chassis requires three people to install.

About this task

CAUTION: Secure the enclosure to the portable lift using the securing straps before moving the lift.

Steps

1. If a portable lift is not available or cannot access the rack, you must remove the components from the shelf before it is installed on the rails:
   a. Refer to the procedures for removing the Power Supplies, link control cards (LCCs), and Fan Modules and remove each FRU.
   b. Refer to the procedure for removing the disk drives and remove the disk drives. Label each disk drive with its exact location so that it can be reinstalled once the shelf is installed in the cabinet.
2. Align the chassis rails with the inner rails that are attached to the cabinet. If you are using a lift, lock the casters into place.

   NOTE: If you are installing the shelf manually without a lift, you will need three people to install it: Two people to hold the chassis in place at the correct height, and one person to align and manage the slides.

3. Manually slide the inner rail over the chassis rail 2-3 inches to line them up.

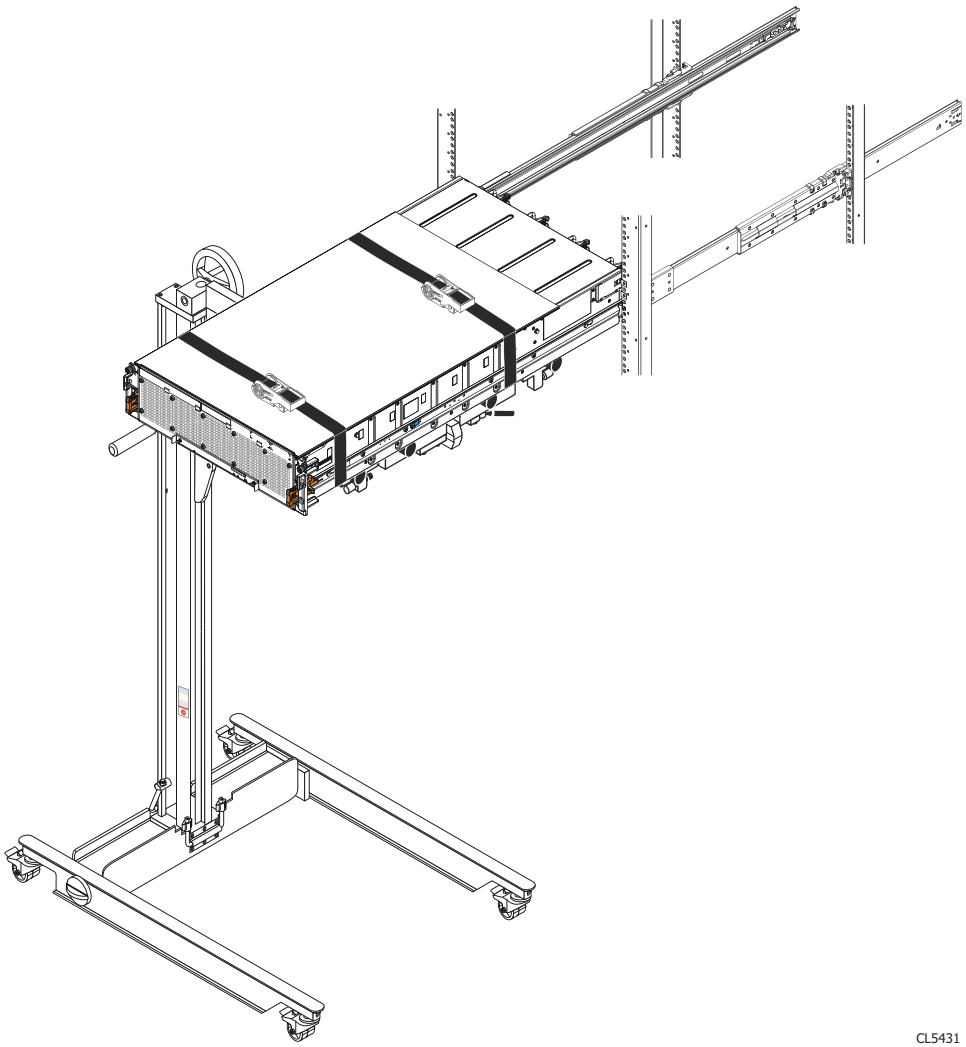

Figure 29. Sliding the shelf chassis into the rails

NOTE: You might need to release sagging tension on the shelf by pulling the lift arms and tray up slightly.

4. Unlock the casters by lifting the locking tabs, as shown in the following figure, and carefully slide the shelf into the cabinet as far as the lift allows.

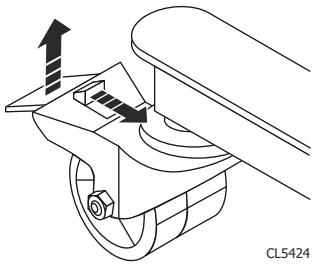

Figure 30. Unlocking the casters

5. Lock all four casters by pressing down on the locking tab, as shown in the following figure, so the lift does not roll as the shelf is pushed into the cabinet.

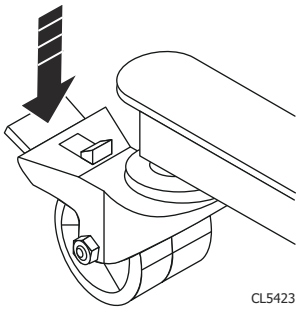

Figure 31. Locking the casters

6. Remove the securing strap by pulling up on the retaining key and pull the ratchet handle upwards as needed, as shown in the following figure.

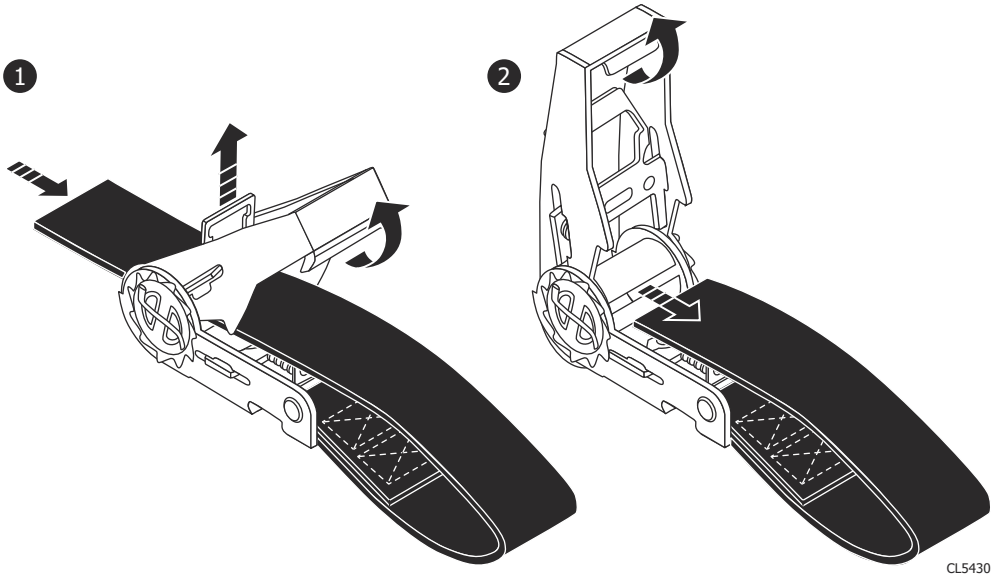

Figure 32. Removing the straps

7. Carefully push the shelf off the lift arms/tray and into the cabinet.

   CAUTION: Make sure to leave the lift under the chassis until the shelf is safely balanced and secured within the cabinet.

8. If the shelf was depopulated before installation, repopulate the shelf as follows:
   a. Reinstall the disk drives in the exact location from which they were removed.
   b. Reinstall the Fan modules.
   c. Slide the shelf into the cabinet.
   d. From the rear of the cabinet, reinstall the power supplies and the link control cards (LCCs) into the shelf.

Inserting and securing the top cover and shelf

About this task

The captive shoulder screws attach the shelf to the cabinet.

Refer to the following table for installation in third-party racks:

Table 3. Truss head screws

Truss head screw from kit	Part number and description	Suggested use
	036-032-010 Screw, M5-0.8x12, Truss Head Phillips with patch	Can be used in Dell EMC racks and third-party non-threaded hole racks.
	036-032-011 Screw, M6-1.0x12, Truss Head Phillips with patch	Can be used in non-Dell EMC racks.
	036-032-009 Screw, 10-32x.5, Truss Head Phillips with patch	Can be used in non-Dell EMC racks.
	036-032-012 Screw, 12-24x.5, Truss Head Phillips with patch	Can be used in non-Dell EMC racks.

Steps

1. For Dell EMC racks, use the orange shelf latch handles to push the shelf completely into the cabinet. Align the two semi-captive M5 shoulder screws on each side with the mounting holes on the cabinet. Thread the shoulder screws into the mounting holes and finger-tighten the shoulder screws.

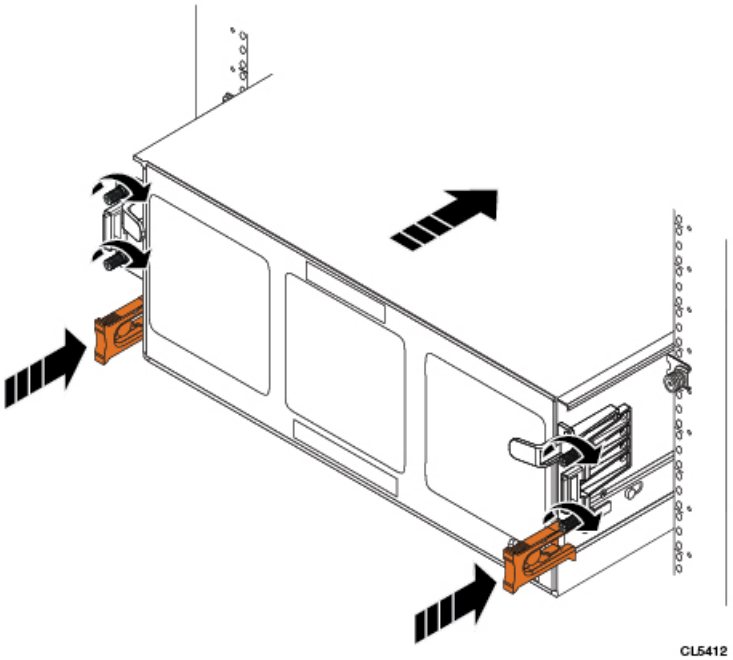

Figure 33. Inserting and securing the shelf to the cabinet (shoulder screw configuration)

- To install the shelf into a third-party rack that is not compatible with the M5 shoulder screws, do the following:
  a. Remove the semi-captive M5 screws by sliding them from the ears.

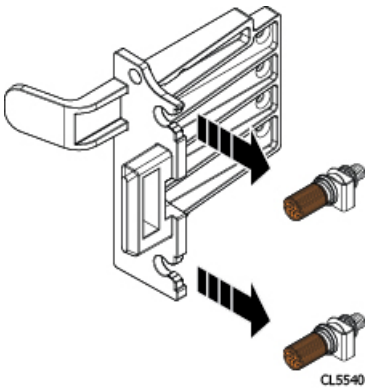

Figure 34. Removing semi-captive screws

b. For non-threaded racks, place tinnerman clips that match the truss-head screws over the mounting holes on the rack. Refer to Truss head screws on page 37 to select the correct truss head screws.

Figure 35. Installing ears to rack using truss head screws

c. Use the orange shelf latch handles to push the shelf completely into the cabinet. Secure the shelf to the rack using four truss-head screws.

2. Secure the top cover to the cabinet:

NOTE:

- Some configurations do not have any hardware installed into the top cover. In these configurations, use the appropriate truss head screw to attach the top cover to the cabinet.
- Some configurations have semi-captive screws in the top cover that will attach to Dell EMC cabinets.
- For third-party cabinets, you can remove the semi-captive screws and use truss head screws to attach the top cover to the cabinet.

To secure a top cover that does not have any mounting hardware, use the screws or pins from the kit that accompanies the device. These screws secure the shelf cover and prevent the cover from coming out of the cabinet during operation. Secure the top cover to the rack as follows:

a. If the shelf is being installed into a Dell EMC rack, secure the top cover to the rack using M5 truss head screws from the kit. Tighten the screws until they are finger tight.

b. If you are installing the shelf into a third-party rack, identify the mounting holes on the rack that will line up with the mounting holes on the top cover. Refer to Truss head screws on page 37 to select the truss head screws to secure the top cover to the rack. For non-threaded racks, place tinnerman clips over the rack mounting holes. Refer to the following figure to attach the top cover to the rack using the appropriate truss head screws from the hardware kit that comes with the shelf.

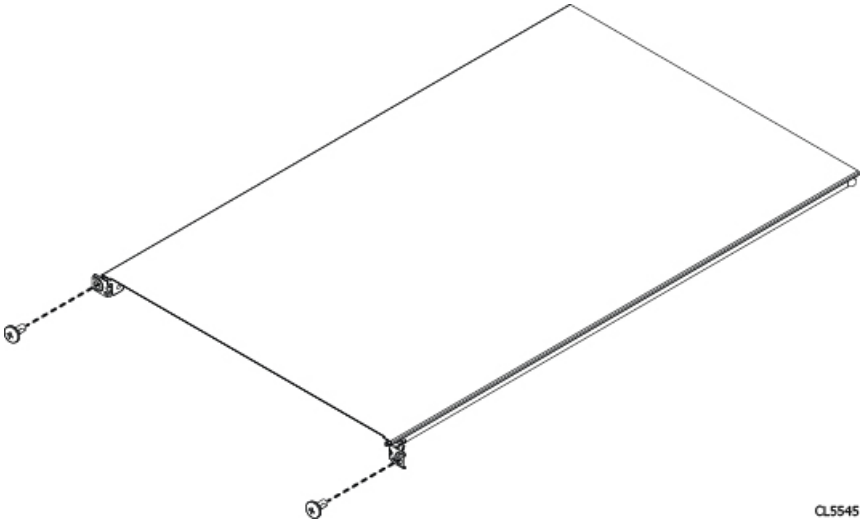

Figure 36. Installing top cover using truss head screws (shelf and rack not shown)

3. To secure the top cover using a top cover with semi-captive screws, do the following:

- For a Dell EMC rack, align the semi-captive screws with the mounting hole in the cabinet and thread the screw into the mounting hole.
- For a third-party rack that is not compatible with the semi-captive screw, remove the semi-captive screw by pulling the screw assembly out the side of the top cover. Identify the mounting holes on the rack that will line up with the mounting holes on the top cover. Refer to Truss head screws on page 37 to select the truss head screws to secure the top cover to the rack. For non-threaded racks, place tinnerman clips over the rack mounting holes. Attach the top cover to the rack using the appropriate truss head screws from the hardware kit that comes with the shelf.

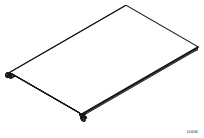

Figure 37. Removal of semi-captive screws

1U cable management tray installation (underneath)

This section describes how to install the 1U cable management tray.

Racks and rails

You can secure the 1U cable tray to Dell EMC and non-Dell EMC racks that use a sliding rail system.

The rail kits are included in the cable tray packaging and are compatible with racks with the following types of holes:

- 3/8 inch square holes
- 9/32 inch round holes
- 10-32, 12-24, M5X.8, or M6X1 pre-threaded holes

The following table shows the hardware and the recommended rack types:

Hardware from kit	Part Number and Description	Recommended Rack Type
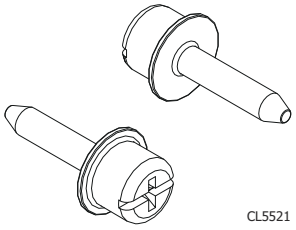	036-034-012 Custom Male-Female 8-32 x .75 screw	Always used to secure rails, regardless of Rack Type
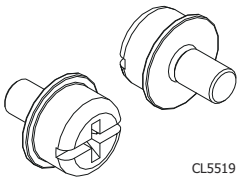	036-034-003 Custom square hole pin	These replace the adaptors that come pre-installed in the rails. Used in racks that have .375" square hole mounting rails.
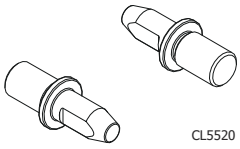	036-034-004 Custom threaded hole pin	These replace the adaptors that come pre-installed in the rails. Used in racks that have threaded holes. These go into the threaded hole for support.

Rail kit mounting brackets adjust in length from 24 inches to 32 inches to accommodate different rack depths.

Installing the 1U cable management tray

The underneath configuration uses the 1U space beneath the shelf. Install the cable management tray before you install the main chassis.

Prerequisites

- Ensure that you have determined the correct cable lengths, cable loops, and pigtail lengths. Consult the application guide for the product you are installing to help determine cable lengths.
- Ensure that the blue tab on the shelf rail (directly above where the 1U Cable Management Tray rails will be installed) is pressed in.

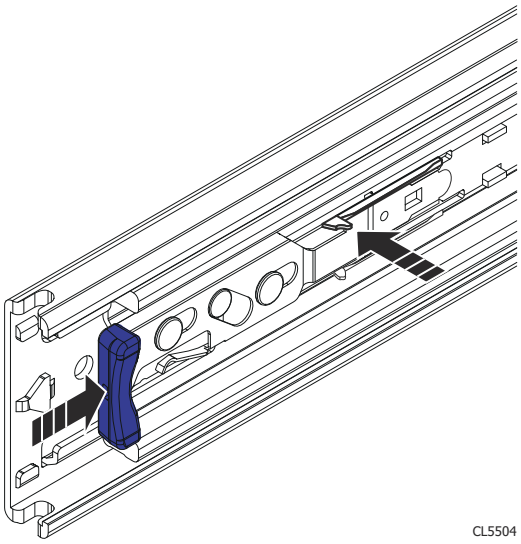

Figure 38. Blue tab on rail must be pushed in

About this task

NOTE: This procedure describes the installation of the 1U cable management tray into a standard Dell EMC rack. For third-party racks, use the additional hardware that comes with the 1U cable management arm to install the rails as necessary.

The rails come preassembled with adapters that fit into standard round mounting holes. If the rack has a different configuration, use the adapters in the hardware kit that come with the tray to mount the rails.

Steps

1. Identify the left and right rails. Orient the rails so that the UP arrow is pointed up and the end of the rails that are labeled FRONT is at the front of the rack.

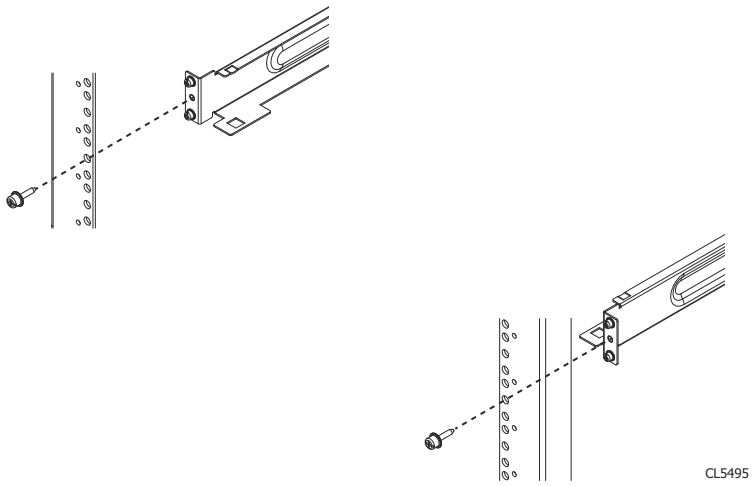

Figure 39. Installing and securing the rails—front

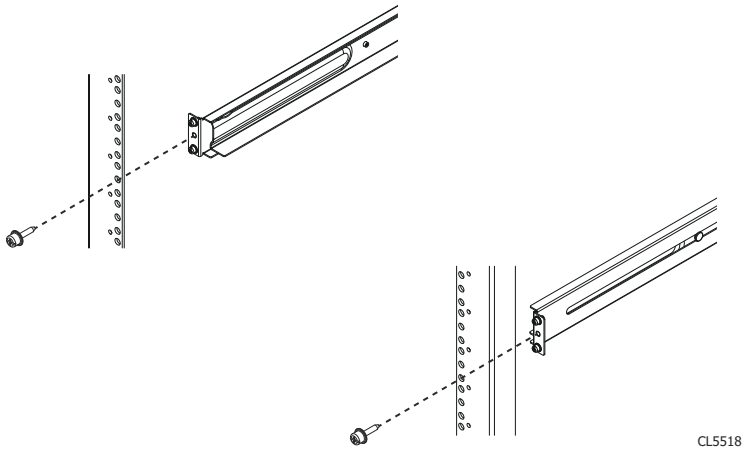

Figure 40. Installing and securing the rails—rear

2. Align the flanges on the inside the mounting holes of the rack. Adjust the rails to the fit the rack you are using. Insert the two adapters on the rail into the mounting holes, in both the front and the rear of the rails. Secure the rails to the rack using two knurled screws from the hardware package, one in the front of the rail, and one in the rear of the rail. Torque the screws to 12-16 inch-pounds. Repeat for the other rail.

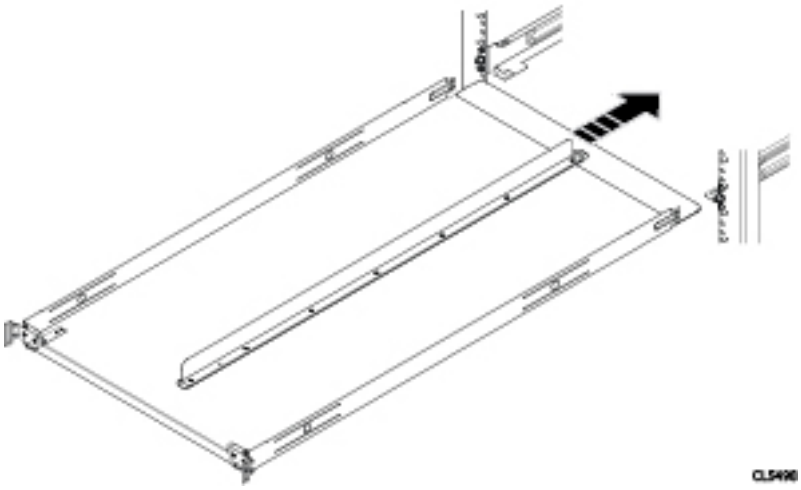

Figure 41. Installing tray

3. Orient the tray so that the UP arrow is pointed up and the end of the tray that is labeled FRONT is to the front of the rack. Slide the tray into the rails until it locks into place with an audible click. To release the tray, press the spring clips up and pull the tray towards the front of the rack.

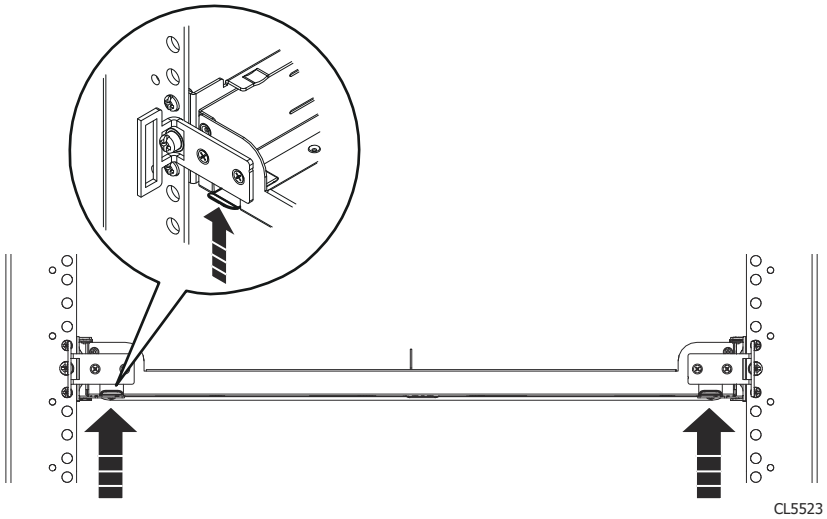

Figure 42. Spring clips—push up to release tray

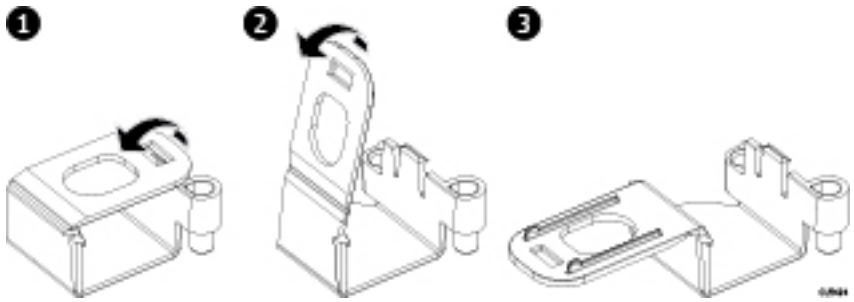

Figure 43. Opening the cable chain lids

4. Unclip and open all lids on the cable chains.

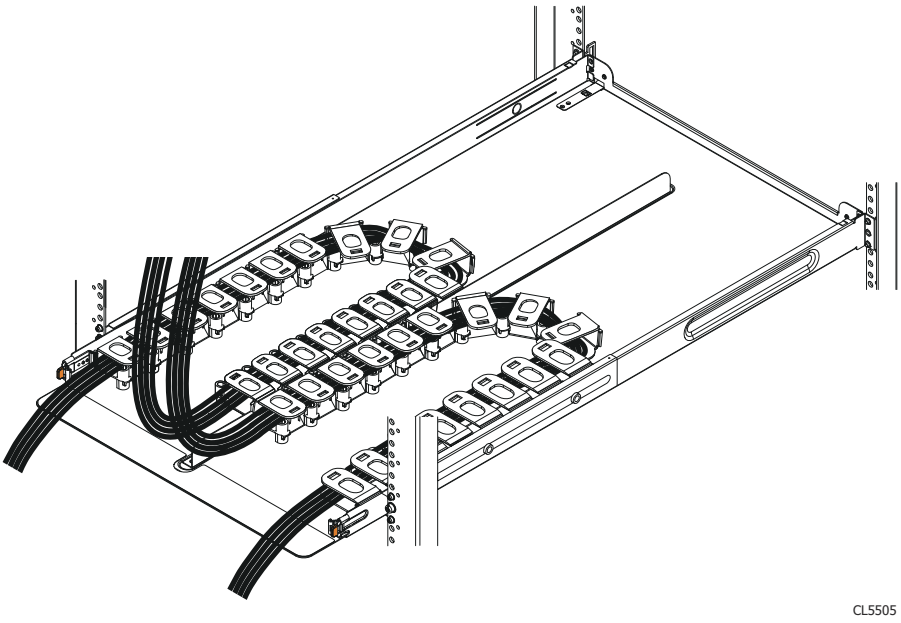

Figure 44. Cable positioning in cable chains

5. Refer to the application guide for the shelf you are installing. Using the 1-inch graduations on the back edge of the tray, route the cables through the cable chains to their suggested lengths, keeping in mind the correct pig-tail lengths. The two

outside cable runs connect to the rack, while the two inside cable runs connect to the shelf. Once the cables are installed, close the lids, making sure that they are snapped shut.

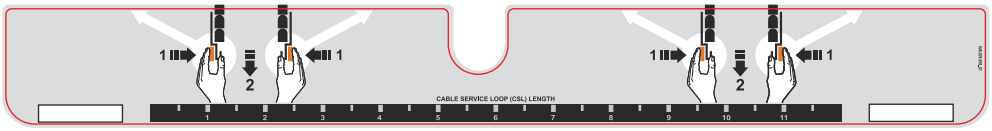

Figure 45. 1-Inch graduation label

6. Align the lids of the cable chains so the lids are facing up and the hinges are all facing each other. Arrange the two cable chains so that they form a "U" shape.

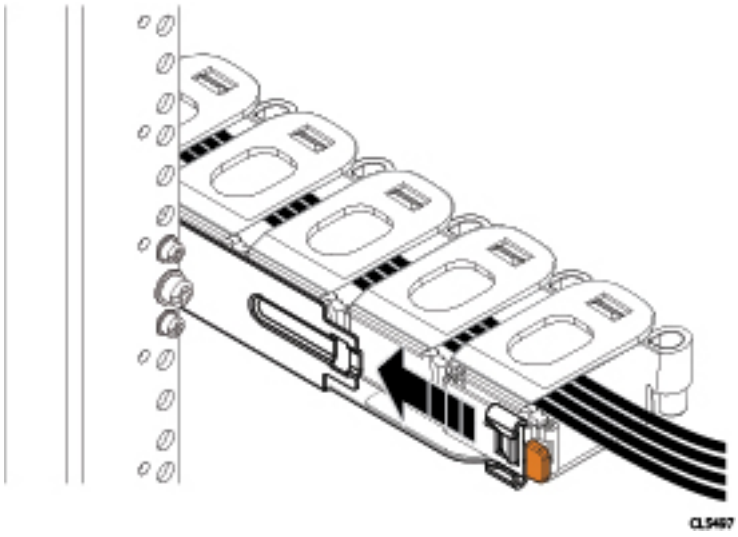

Figure 46. Attaching cable chains to tray

7. Attach the Cable Chains to the tray, by attaching the clips onto the tabs on the rear of the tray.

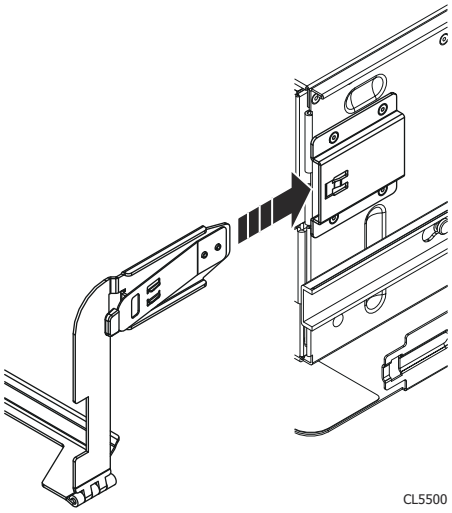

Figure 47. Installing the chassis bracket into the shelf

8. Snap the chassis bracket clips into the brackets on the side of the chassis.

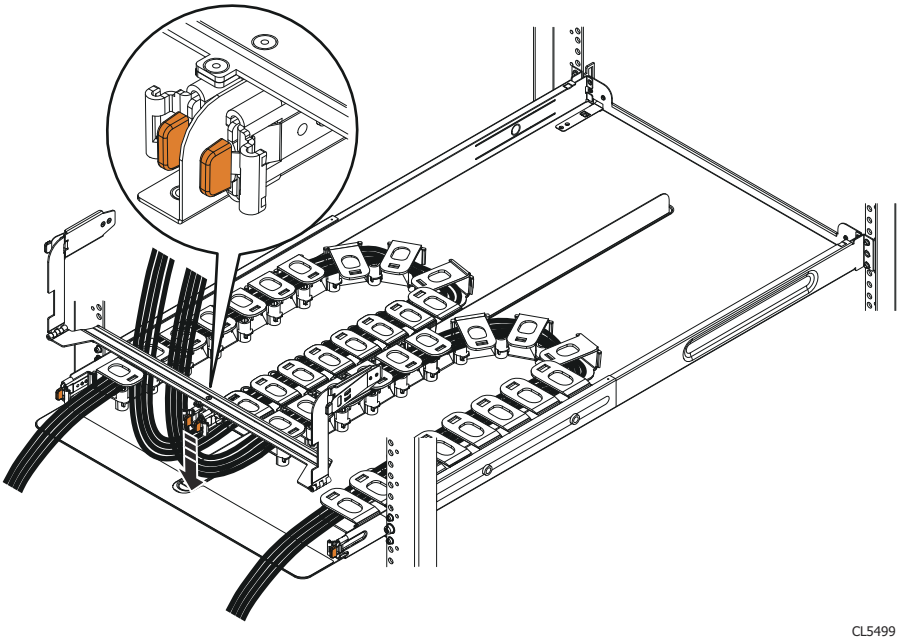

Figure 48. Installing the chassis bracket

9. Place the chassis bracket over the center rail of the cable tray. Clip the free end of the cable chains to the center flange on the chassis bracket.

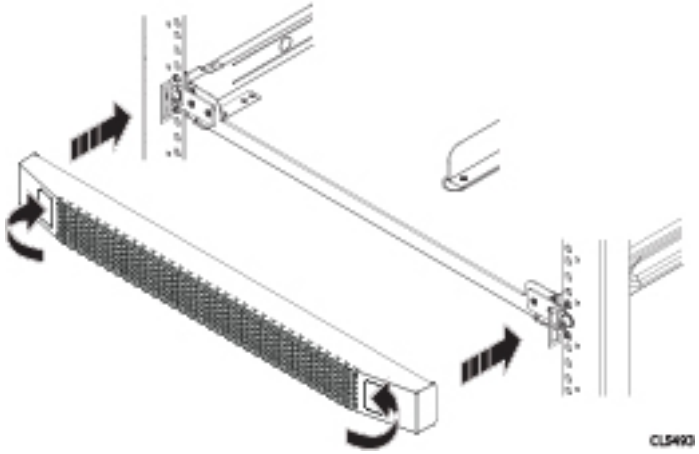

Figure 49. Installing the bezel

10. Place the bezel over the front of the tray by pressing the release buttons on the bezel and placing it over the retaining slots on the tray. Release the buttons and the tabs will mate with the slots.
11. Refer to the application guide and connect the cables as required. Dress the cable runs with proper cable strain reliefs when routing to the rack.

Disconnecting cables for a shelf installed with the 1U cable management tray

When servicing a shelf installed with the 1U cable management tray, cables might need to be disconnected to perform servicing procedures.

Steps

1. Unplug/disconnect all cables from the rear of the shelf to be serviced.
2. Disconnect the cable guide clips from the chassis.
3. Disconnect the cable guide clips from the 1U cable management tray.
4. Move the cables out of the way to provide access for servicing the shelf.

Third-party rack installation

Follow these best practice guidelines to ensure an orderly installation:

- Third-party racks might have PDUs which face into the rack. This can cause interference between the shelf and/or rear CMAs. Carefully plan and route cables to minimize any interference. It might be necessary to use a type of PDU that is mounted in the main rack area.
- The shelf rails have four adjustment ranges, 18-22", 22-26", 26-30", 30-34". The default length (out of the shipping crate) is the 22-26" setting.
- After installation, check each rail to ensure that it is level and in the correct location before installing the next rail.
- When securing rails to the NEMA channel, especially channels with square holes, install the screws loosely to prevent cross threading, and tighten by hand. Do not over torque.
- Use black M5 screws, which align with both round and square channel holes, to secure all rails and components in the customer racks. Discard all silver screws removed from the shipping rack.

Modifying rail lengths

This procedure details how to extend or shorten the rail lengths to accommodate third-party racks.

About this task

The rails have four adjustment ranges, 18-22", 22-26" (default), 26-30", 30-34". The length adjustments provided in this procedure use the default length of 22-26" as a baseline.

The following links provide the steps for the various adjustment lengths:

- 18-22" length procedure
- 26-30" length procedure
- 30-34" length procedure

Steps

- To change the length of the rail to 18-22" (shortest setting) do the following:

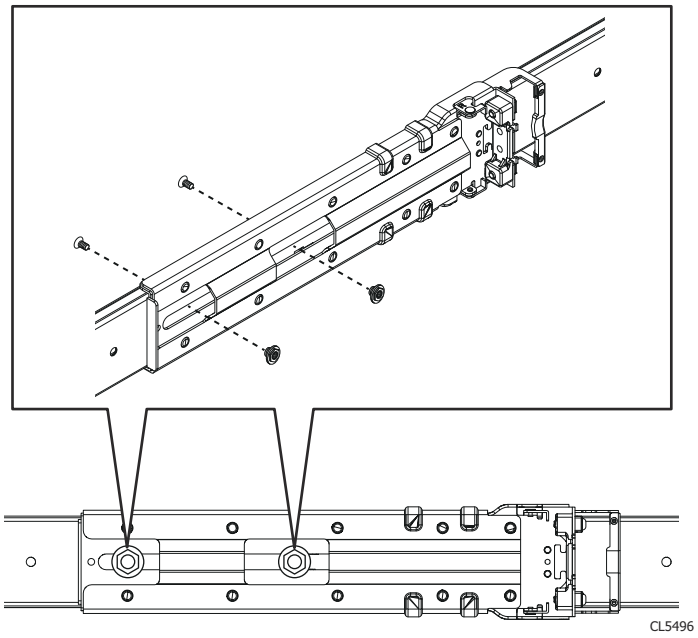

Figure 50. Screw and nut placements

1. Orient one of the rails to identify the front of the rail so that the inside of the rail is visible with the spacing markings visible.
2. Locate the two screws and nuts which hold the length adjustment bracket in place.
3. Using a screwdriver and a nut driver (pliers or vise-grips will work as well), remove both screws and nuts. The length adjustment bracket will be free of the rail.

4. Move to the front of the rail and align the mounting slots with the mounting holes near the front of the rail.

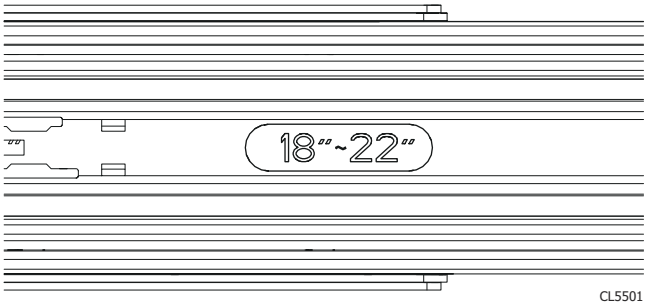

Figure 51. 18"-22" marking

5. Slide the inner rail mechanism to the front of the rail until the 18"-22" mark is visible. If the inner mechanism is locked, depress the leaf spring and press the rail locking mechanism to free it.
6. Adjust the hardware to make sure the mounting holes are aligned with the mounting slots.
7. Secure the length adjustment bracket in place using both screws and nuts that were removed earlier.
8. Repeat for the other rail.

- To change the length of the rail to 26-30", do the following:
  1. Orient one of the rails to identify the front of the rail so that the inside of the rail is visible with the spacing markings visible.
  2. Locate the most forward (closest to the front of the rail) screw and nut which hold the length adjustment bracket in place.
  3. Using a screwdriver and a nut driver (pliers or vise-grips will work as well), remove the forward-most screw and nut.
  4. Slide the length adjustment bracket to the rear of the rail until it stops.

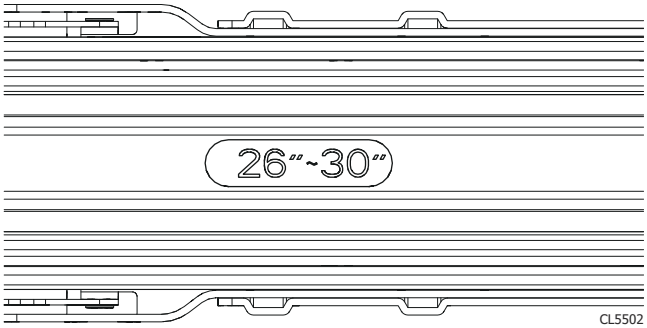

Figure 52. 26"-30" Marking

  5. Slide the inner rail mechanism to the rear of the rail until the 26"-30" mark is visible. If the inner mechanism is locked, depress the leaf spring to free it.
  6. Adjust the hardware to make sure the mounting holes are aligned with the mounting slots.
  7. Secure the length adjustment bracket in place using the screw and nut that were removed earlier.
  8. Repeat for the other rail.
- To change the length of the rail to 30-34"" (longest setting) do the following:
  1. Orient one of the rails to identify the front of the rail so that the inside of the rail is visible with the spacing markings visible.
  2. Locate the two screws and nuts which hold the length adjustment bracket in place.
  3. Using a screwdriver and a nut driver (pliers or vise-grips will work as well), remove both screws and nuts. The length adjustment bracket will be free of the rail.
  4. Move the length adjustment bracket to the rear of the rail and align the mounting slots with the mounting holes near the rear of the rail.

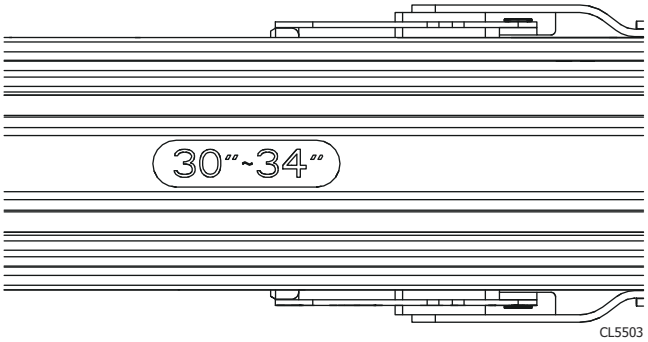

Figure 53. 30"-34" Marking

5. Slide the inner rail mechanism to the rear of the rail until the 30-34" mark is visible. If the inner mechanism is locked, depress the leaf spring to free it.
6. Adjust the hardware to make sure the mounting holes are aligned with the mounting slots.
7. Secure the length adjustment bracket in place using both screws and nuts that were removed earlier.
8. Repeat for the other rail.

Next steps

After the rails are adjusted to the proper length, install the rails in the rack.

Installing the rails in a third-party rack

The rails are shipped with 6.8 mm adapters that are designed to fit into the NEMA channels of the Dell EMC rack. For third-party racks, the 6.8 mm adapters must be removed and replaced with rail pins that fit the hole-types in the third-party rack.

About this task

CAUTION: Exercise care when installing the short rails. Exposed metal edges may be sharp and could damage cabling or cause injury to personnel.

Refer to the following tables and figures to install each shelf.

The following table shows the rail pins and their suggested use.

Table 4. Pins for third-party racks

Rail Pins from kit	Part Number and Description	Suggested Use
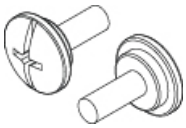	036-028-018 Custom screw, M4 x 10MM (Quantity: 4 per kit)	Used for any third-party rack. Can be used in racks with threaded holes.
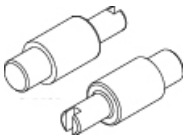	036-028-016 3.8MM Alignment Pin (Quantity: 8 per kit)	Used in racks that have M5, #10, or #12 threaded holes.
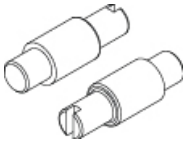	036-028-017 4.8MM Alignment Pin (Quantity: 8 per kit)	Used in racks that have M6 threaded holes.

NOTE: Each of the rail alignment pins must be located in the middle holes of the bottom two U spaces of the 4U space.

The following table lists the parts that are referenced in Rail installation on page 48.

Table 5. Parts list

Image #	Description	Qty	Part number
1	Shelf rail location in 4U space	n/a	n/a
2	Universal Rail Pins (see previous table for details)	n/a	Part of PN 106-569-300 and 106-529-209
3	Shelf rails (2 each/kit) for each node	2	PN 106-569-300 and 106-529-209

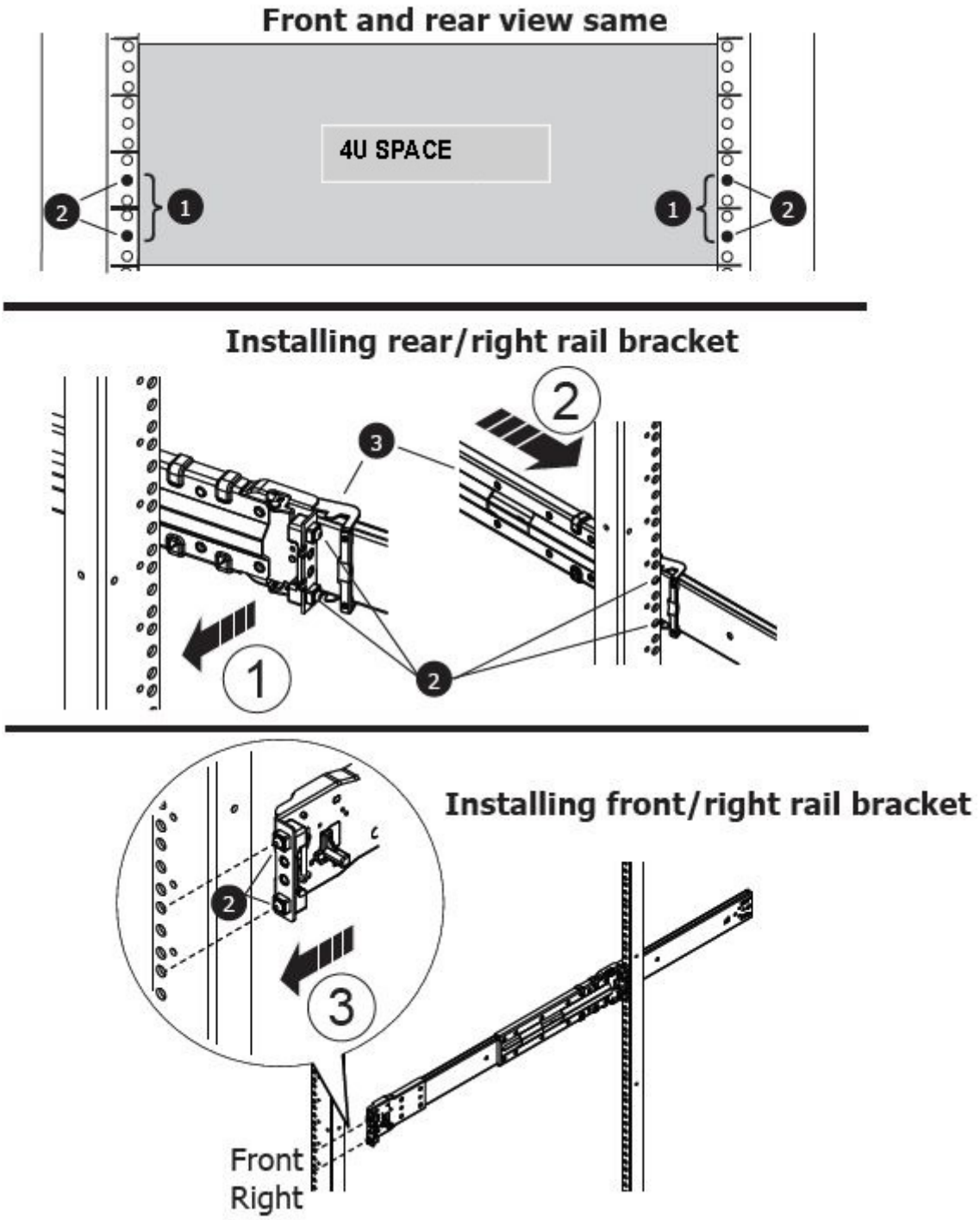

Figure 54. Rail installation

Steps

1. Remove the 6.8 mm adapters and replace them with the appropriate hardware from the kit:

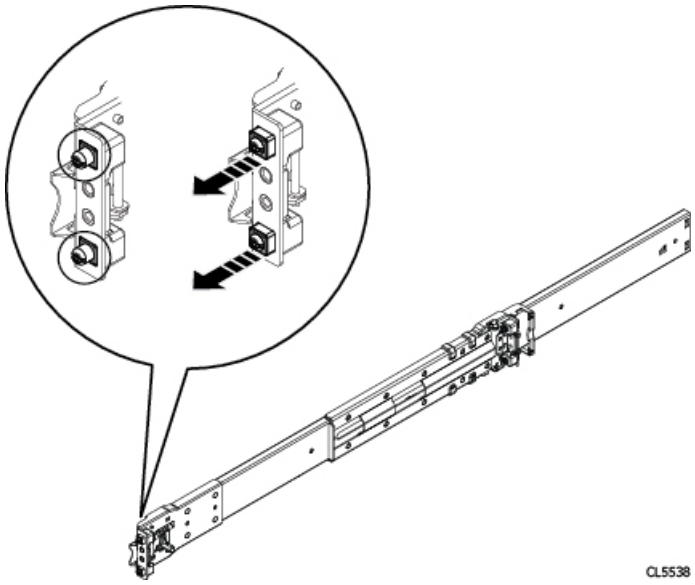

   a. Using a flat-bladed screwdriver, remove the two 6.8 mm adapters from the adapter mounting block on the rails.
   b. Select the correct adapters from the hardware kit and install the adapters into the adapter mounting block.
2. Locate the 4U rack space designated for the shelf.
3. Install the right rail to the rear channel.
   a. Align the right rail so that the alignment pins are centered on the middle holes of the bottom two U spaces of the 4U space.
   b. Move the bracket with the alignment pins to their correct location.
   c. Push the rail back to secure the rail posts in the cabinet channel.

      An audible click indicates that the rail is secure in the channel. Make sure the rear post/catch mechanism is secure and attached.
4. Install the right rail to the front channel.
   a. Align the front of the right rail so that it is level and the front rail pins are aligned with the middle holes of the bottom two U spaces of the 4U space.
   b. Pull the rail forward, with the posts aligned with the middle holes of the bottom two U spaces of the 4U space.

      An audible click indicates that the connection is secure.
5. Install the left rail by mirroring the previous steps.
6. Remove the shipping tape that is attached to the node rails.

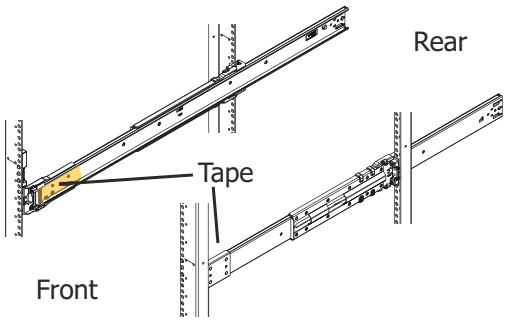

Figure 55. Removing shipping tape

7. On both left and right rail assemblies, install a single long screw between the rail posts in the center screw hole to secure the rails as follows:

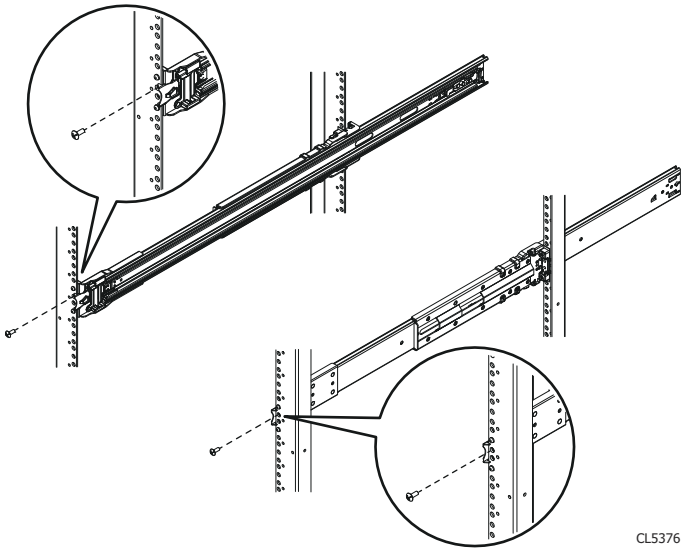

Figure 56. Securing a rail with a single screw

- If you are installing the rails in a rack that has threaded holes, insert an M4 screw into the smaller of the two center screw holes at both the front and the rear of the rail. The screw is smaller and will pass through the threaded hole in the NEMA racks.
- If you are installing the rails in a rack that does not have threaded holes, insert an M5 screw that comes with the chassis into the larger of the two center screw holes in the rail at the front and rear of the rack.

The following table lists the parts that are referenced in Location of securing screws and alignment pins on page 50.

Table 6. Parts list

Image #	Description	Qty	Part number
1	Node rail location in 4U space	n/a	n/a
2	Node rail square alignment pins	n/a	Part of PN 100-569-209
4	M5 or M4 securing screws	4	PN 106-002-452 or 036-028-018

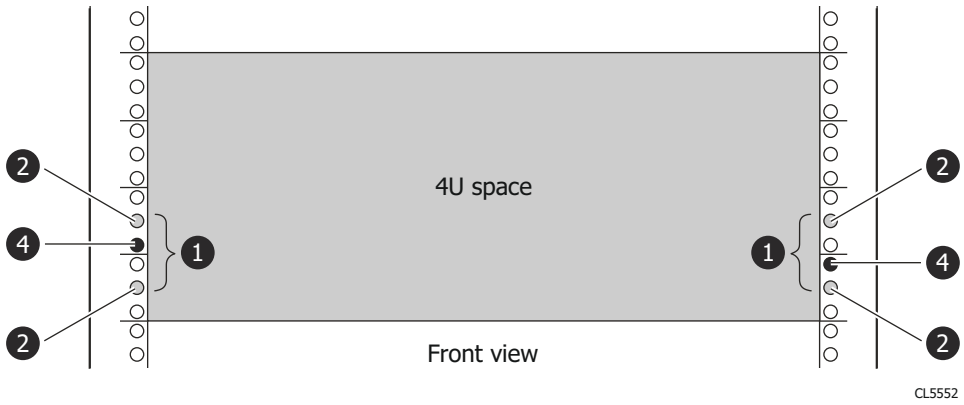

Figure 57. Location of securing screws and alignment pins

Installing the nutbars

About this task

For each shelf, reference the following table, figure, and steps to install the nutbars.

The following table lists the parts that are referenced in the figure below.

Table 7. List of parts used in nutbar installation illustration

Image #	Description	Qty	Part number
1	Nutbar location in 4U space	1 ea	Nutbars: (Left: 051-000-357), (Right: 051-000-356)
2	Rail location in the 4U space	n/a	N/A
3	Rail bracket alignment pins	n/a	N/A
4	Nutbar alignment pins	n/a	Part of PN 051-000-357 and PN 051-000-356
5	Nutbar M5 securing screws, black	4	PN 036-709-013

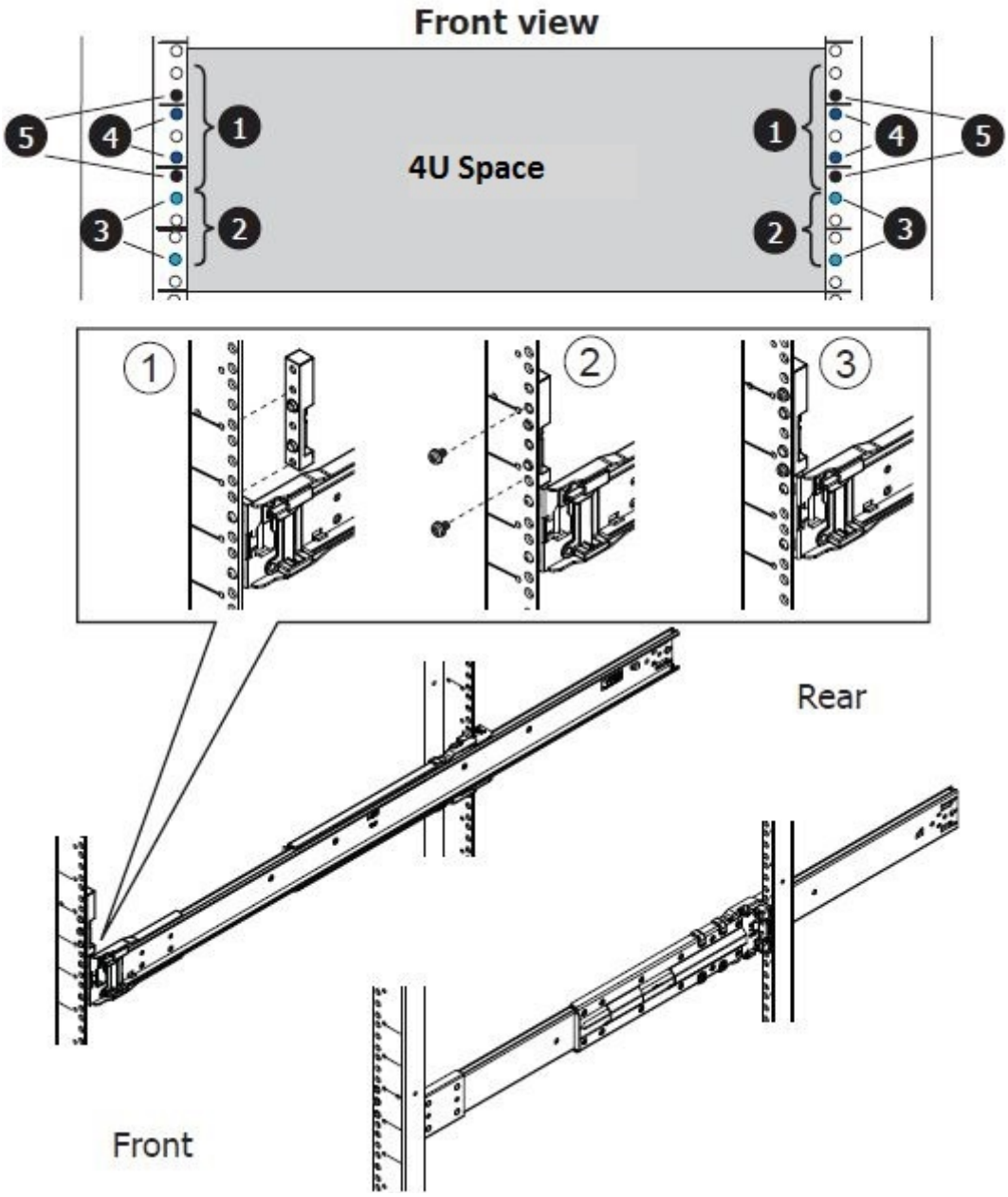

Figure 58. Nutbar installation (Left nutbar shown)

NOTE: The nutbars are not interchangeable. There is a distinct nutbar for the left and right side. Use part numbers for identification.

Steps

1. At the front of the rack, align and install the left nutbar (051-000-357) directly above the rail assembly.
2. Secure the nutbar with two M5 securing screws, one above the top alignment pin and one below the lower alignment pin.
3. Repeat the previous steps for the right nutbar (051-000-356).

4

Connect Cables and Power On

Topics:

- Connecting the expansion shelves and the controllers
- ES30 cable information
- Connecting multiple ES30 shelves to the DD9800 system
- DS60 cable information
- Connecting multiple DS60 shelves to the DD9800 system
- Connecting the HA interconnect
- Connect data cables on both nodes
- Power on the systems
- Install the bezel

Connecting the expansion shelves and the controllers

Multiple expansion shelves are connected together and to the controller with qualified SAS cables.

NOTE: You must save any extra SAS cables for future use.

The diagrams in the following sections show recommended cabling and component placement of a system and shelves in the rack(s). The cables that are provided support the controller and shelves in the rack positions as shown in the diagrams.

- Refer to the diagrams in the Connecting multiple ES30 shelves to the DD9800 system on page 57 to connect a DD9800 system.
- Refer to the diagrams in the Connecting multiple DS60 shelves to the DD9800 system on page 68 to connect a DD9800 system.

For more information about specific shelf cabling rules and guidelines for different types of shelves, see:

- *Data Domain ES30 and FS15 Expansion Shelf Hardware Guide*
- *Data Domain DS60 Expansion Shelf Hardware Guide*

ES30 cable information

The cable end that connects to an ES30 from node 0 has a mini-SAS connector with a ● port.

The cable end that connects to an ES30 from node 1 has a mini-SAS connector with a ◆ port.

Cables between ES30s have mini-SAS connectors on both ends.

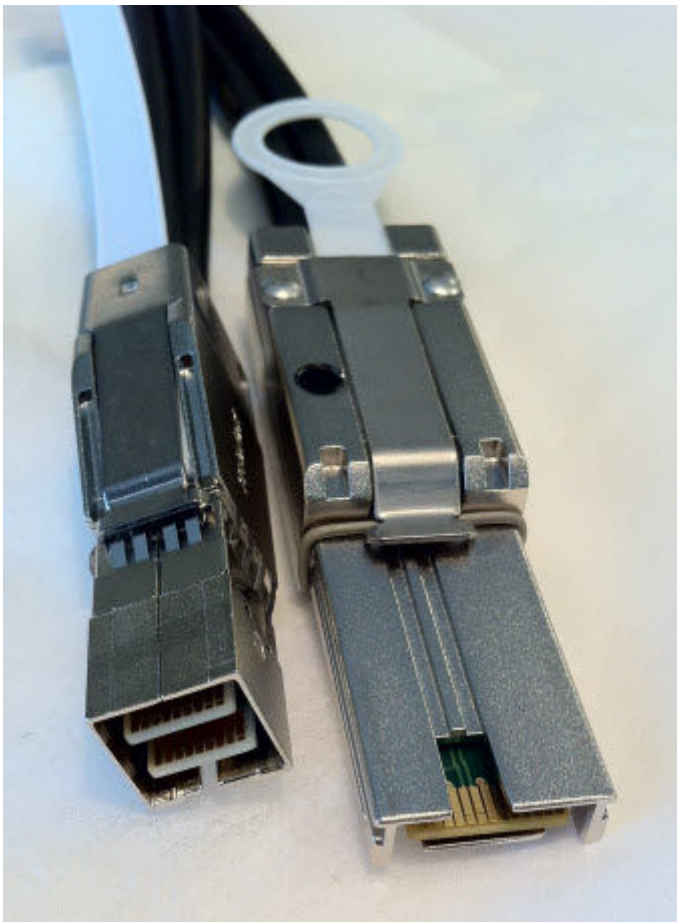

Figure 59. Node 0 SAS I/O module to ES30 host port connector

Table 8. Cables for node 0 to ES30 shelf loop

HD-mini-SAS connector on controller, SFF-8088 connector keyed for host port on ES30		
Cable model code	**Part number**	**Cable length**
X-SAS-HDMS2	038-003-810	2 m (79 in)
X-SAS-HDMS3	038-003-811	3 m (118 in)
X-SAS-HDMS5	038-003-813	5 m (196 in)

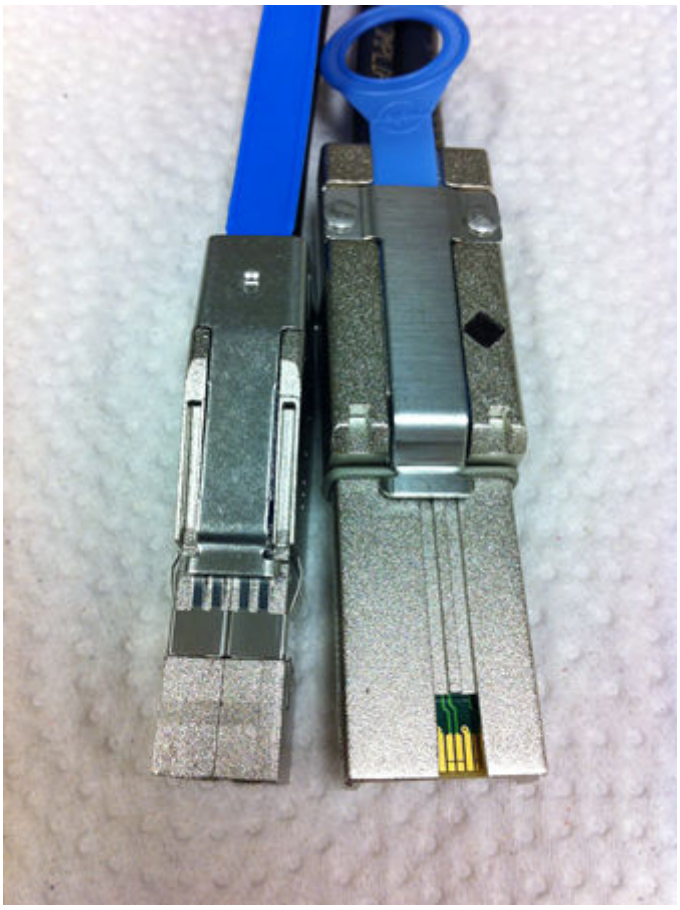

Figure 60. Node 1 SAS I/O module to ES30 expansion port connector

Table 9. Cables for node 1 to ES30 shelf loop

HD-mini-SAS connector on controller, SFF-8088 connector keyed for expansion port on ES30		
Cable model	**Part number**	**Cable length**
X-HA-ES30-SAS-2	038-004-108	2 m (79 in)
X-HA-ES30-SAS-5	038-004-111	5 m (196 in)

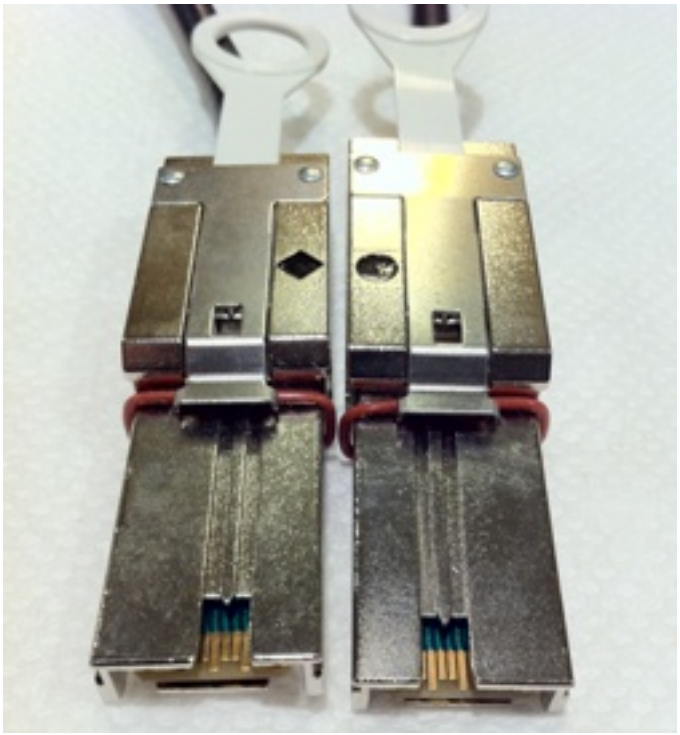

Figure 61. Cables for ES30 to ES30 connections

Table 10. ES30 to ES30 cable options

Mini-SAS cable, SFF-8088 connectors on both ends, one end keyed for host ports and the other keyed for expansion ports		
Cable model	**Part number**	**Cable length**
X-SAS-MSMS1	038-003-786	1 m (39 in.)
X-SAS-MSMS2	038-003-787	2 m (79 in.)
X-SAS-MSMS3	038-003-751	3 m (118 in.)
X-SAS-MSMS4	038-003-628	4 m (158 in.)
X-SAS-MSMS5	038-003-666	5 m (196 in.)

CAUTION: Observe the following considerations when cabling new shelves:

- **Work on one SAS loop at a time.**
- **Allow at least two minutes between each cable removal or insertion on a SAS I/O module in the Data Domain controller.**
- **Verify all SAS cables are fully seated at both ends.**
- **If possible, utilize available SAS I/O module connections to add new storage enclosures.**

Connecting multiple ES30 shelves to the DD9800 system

The cabling diagrams in this section show the maximum configurations for the DD9800 systems. Not all systems will have all the disk shelves shown in the diagrams.

Add shelf-to-shelf cables between shelves in a loop and to the controller as shown in the diagrams.

1. Cable from the B Controller EXPANSION ◆ port of the lower shelf to the B controller HOST ● port of the next higher shelf.
2. Then cable from the A Controller HOST ● port of lower shelf to the A controller EXPANSION ◆ port of the next higher shelf
3. There are no specific placement or cabling requirements for SSD shelves, or the metadata shelves for DD Cloud Tier configurations. These shelves can be installed and cabled the same way as standard ES30 shelves.
4. The SSD shelf counts towards the total number of shelves connected to the system.
5. Data Domain recommends installing the SSD shelf in the V1.1 positon, but if that is not possible, the shelf can be placed in a different location in the rack so long as cables of sufficient length are available.

   NOTE: V1.1 is recommended for better performance because this will the 1st hop where data will be written. If the SSD shelf is connected to the last enclosure in a chain, then each read/write request has to go through many hops, which introduces latency issues when compared to when the SSD shelf is on the 1st shelf of a chain.
6. Use the cable management assembly to support and organize all cables from theDD9800 system.

Select the appropriate configuration from the following list, and connect the disk shelves to the Data Domain controller.

- DD9800 on page 57
- DD9800 with HA (one rack) on page 59
- DD9800 with HA (two racks) on page 60
- DD9800 with DD Cloud Tier (Single node or HA) on page 62
- DD9800 with ERSO on page 64

DD9800

For a base DD9800 system:

Table 11. DD9800 with ES30

String (Loop)	I/O - Port	Shelf Port	Length [a]
1	I/O 3 - Port 1	B controller HOST ● port of shelf V1.1	2M
1	I/O 2 - Port 0	A controller HOST ● port of the highest number shelf in V1	2M
2	I/O 3 - Port 0	B controller HOST ● port of shelf V2.1	2M
2	I/O 6 - Port 1	A controller HOST ● port of the highest number shelf in V2	2M
3	I/O 2 - Port 1	B controller HOST ● port of shelf V3.1	2M
3	I/O 6 - Port 0	A controller HOST ● port of the highest number shelf in V3	2M
4	I/O 3 - Port 3	B controller HOST ● port of shelf V4.1	3M
4	I/O 2 - Port 2	A controller HOST ● port of the highest number shelf in V4	3M
5	I/O 3 - Port 2	B controller HOST ● port of shelf V5.1	3M
5	I/O 6 - Port 2	A controller HOST ● port of the highest number shelf in V5	3M
6	I/O 2 - Port 3	B controller HOST ● port of shelf V6.1	3M

Table 11. DD9800 with ES30 (continued)

String (Loop)	I/O - Port	Shelf Port	Length [a]
6	I/O 6 - Port 3	A controller HOST ● port of the highest number shelf in V6	3M

a. Cable lengths shown are designed for Data Domain racks. Longer cables (up to 5M) can be used.

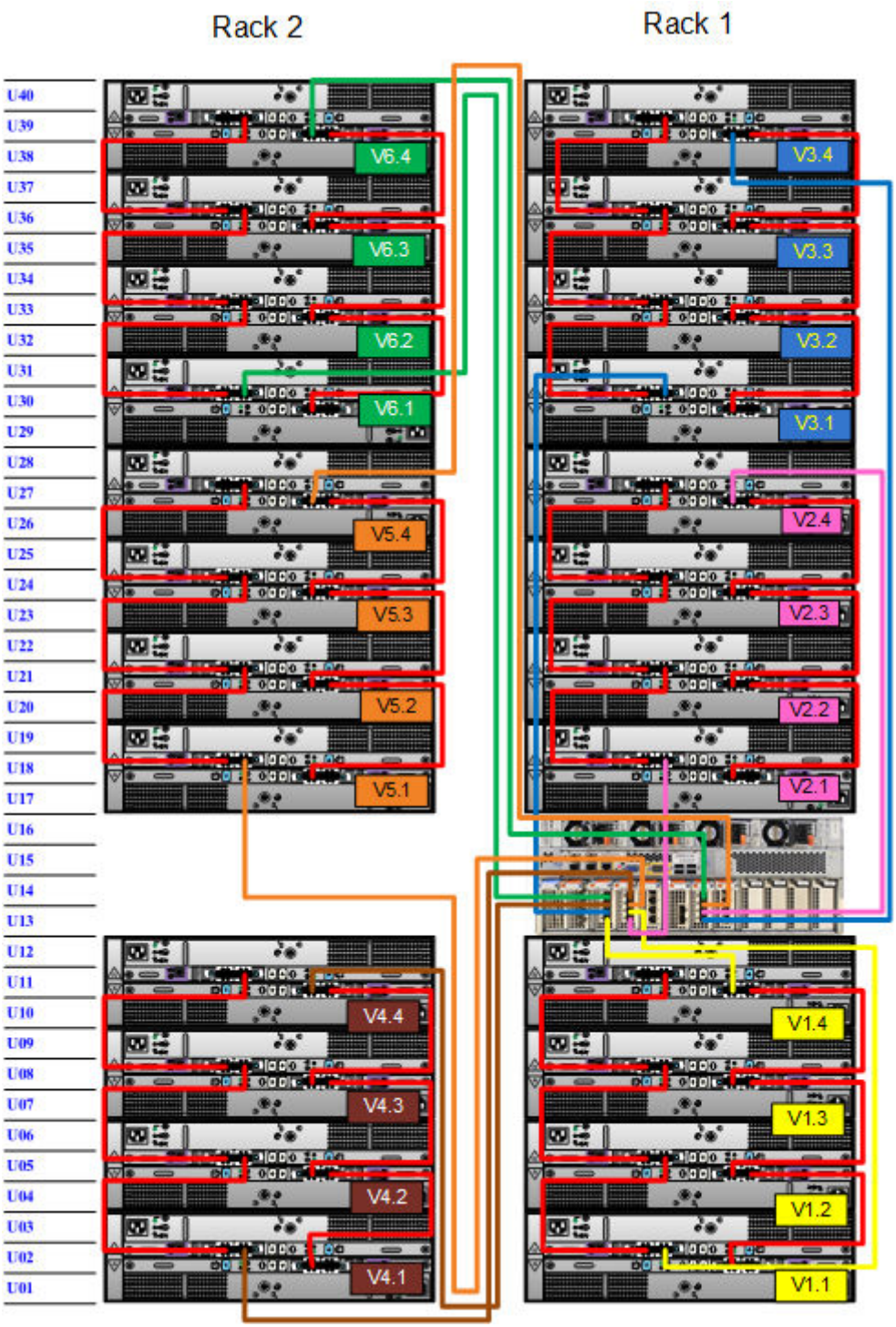

Figure 62. DD9800 with ES30 shelves

DD9800 with HA (one rack)

For an HA DD9800 pair in one rack:

Table 12. DD9800 with ES30 HA primary node cabling instructions (one rack)

String (Loop)	I/O - Port	Shelf Port	Length [a]
1	I/O 3 - Port 1	B controller HOST ● port of shelf V1.1	2M
1	I/O 2 - Port 0	A controller HOST ● port of the highest number shelf in V1	2M
2	I/O 3 - Port 0	B controller HOST ● port of shelf V2.1	2M
2	I/O 6 - Port 1	A controller HOST ● port of the highest number shelf in V2	2M
3	I/O 2 - Port 1	B controller HOST ● port of shelf V3.1	2M
3	I/O 6 - Port 0	A controller HOST ● port of the highest number shelf in V3	2M

a. Cable lengths shown are designed for Data Domain racks. Longer cables (up to 5M) can be used.

Table 13. DD9800 with ES30 HA standby node cabling instructions (one rack)

String (Loop)	I/O - Port	Shelf Port	Length [a]
1	I/O 3 - Port 1	A controller EXPANSION ◆ port of shelf V1.1	2M
1	I/O 2 - Port 0	B controller EXPANSION ◆ port of the highest number shelf in V1	2M
2	I/O 3 - Port 0	A controller EXPANSION ◆ port of shelf V2.1	2M
2	I/O 6 - Port 1	B controller EXPANSION ◆ port of the highest number shelf in V2	2M
3	I/O 2 - Port 1	A controller EXPANSION ◆ port of shelf V3.1	2M
3	I/O 6 - Port 0	B controller EXPANSION ◆ port of the highest number shelf in V3	2M

a. Cable lengths shown are designed for Data Domain racks. Longer cables (up to 5M) can be used.

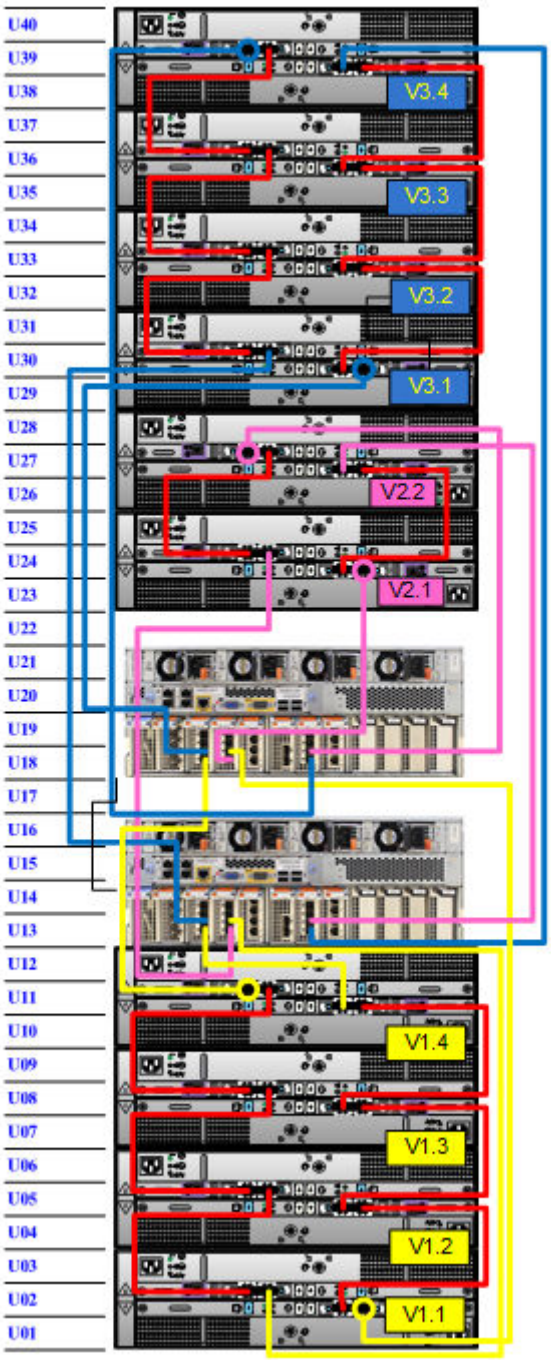

Figure 63. DD9800 with ES30 shelves, HA (one rack)

DD9800 with HA (two racks)

For an HA DD9800 pair in two racks:

Table 14. DD9800 with ES30 HA primary node cabling instructions (two racks)

String (Loop)	I/O - Port	Shelf Port	Length [a]
1	I/O 3 - Port 1	B controller HOST ● port of shelf V1.1	2M
1	I/O 2 - Port 0	A controller HOST ● port of the highest number shelf in V1	2M

Table 14. DD9800 with ES30 HA primary node cabling instructions (two racks) (continued)

String (Loop)	I/O - Port	Shelf Port	Length [a]
2	I/O 3 - Port 0	B controller HOST ● port of shelf V2.1	2M
2	I/O 6 - Port 1	A controller HOST ● port of the highest number shelf in V2	2M
3	I/O 2 - Port 1	B controller HOST ● port of shelf V3.1	2M
3	I/O 6 - Port 0	A controller HOST ● port of the highest number shelf in V3	2M
4	I/O 3 - Port 3	B controller HOST ● port of shelf V4.1	3M
4	I/O 2 - Port 2	A controller HOST ● port of the highest number shelf in 43	3M
5	I/O 3 - Port 2	B controller HOST ● port of shelf V5.1	3M
5	I/O 6 - Port 2	A controller HOST ● port of the highest number shelf in V5	3M
6	I/O 2 - Port 3	B controller HOST ● port of shelf V6.1	3M
6	I/O 6 - Port 3	A controller HOST ● port of the highest number shelf in V6	3M

a. Cable lengths shown are designed for Data Domain racks. Longer cables (up to 5M) can be used.

Table 15. DD9800 with ES30 HA standby node cabling instructions (two racks)

String (Loop)	I/O - Port	Shelf Port	Length [a]
1	I/O 3 - Port 1	A controller EXPANSION ◆ port of shelf V1.1	2M
1	I/O 2 - Port 0	B controller EXPANSION ◆ port of the highest number shelf in V1	2M
2	I/O 3 - Port 0	A controller EXPANSION ◆ port of shelf V2.1	2M
2	I/O 6 - Port 1	B controller EXPANSION ◆ port of the highest number shelf in V2	2M
3	I/O 2 - Port 1	A controller EXPANSION ◆ port of shelf V3.1	2M
3	I/O 6 - Port 0	B controller EXPANSION ◆ port of the highest number shelf in V3	2M
4	I/O 3 - Port 3	A controller EXPANSION ◆ port of shelf V4.1	3M
4	I/O 2 - Port 2	B controller EXPANSION ◆ port of the highest number shelf in V4	3M
5	I/O 3 - Port 2	A controller EXPANSION ◆ port of shelf V5.1	3M
5	I/O 6 - Port 2	B controller EXPANSION ◆ port of the highest number shelf in V5	3M
6	I/O 2 - Port 3	A controller EXPANSION ◆ port of shelf V6.1	3M
6	I/O 6 - Port 3	B controller EXPANSION ◆ port of the highest number shelf in V6	3M

a. Cable lengths shown are designed for Data Domain racks. Longer cables (up to 5M) can be used.

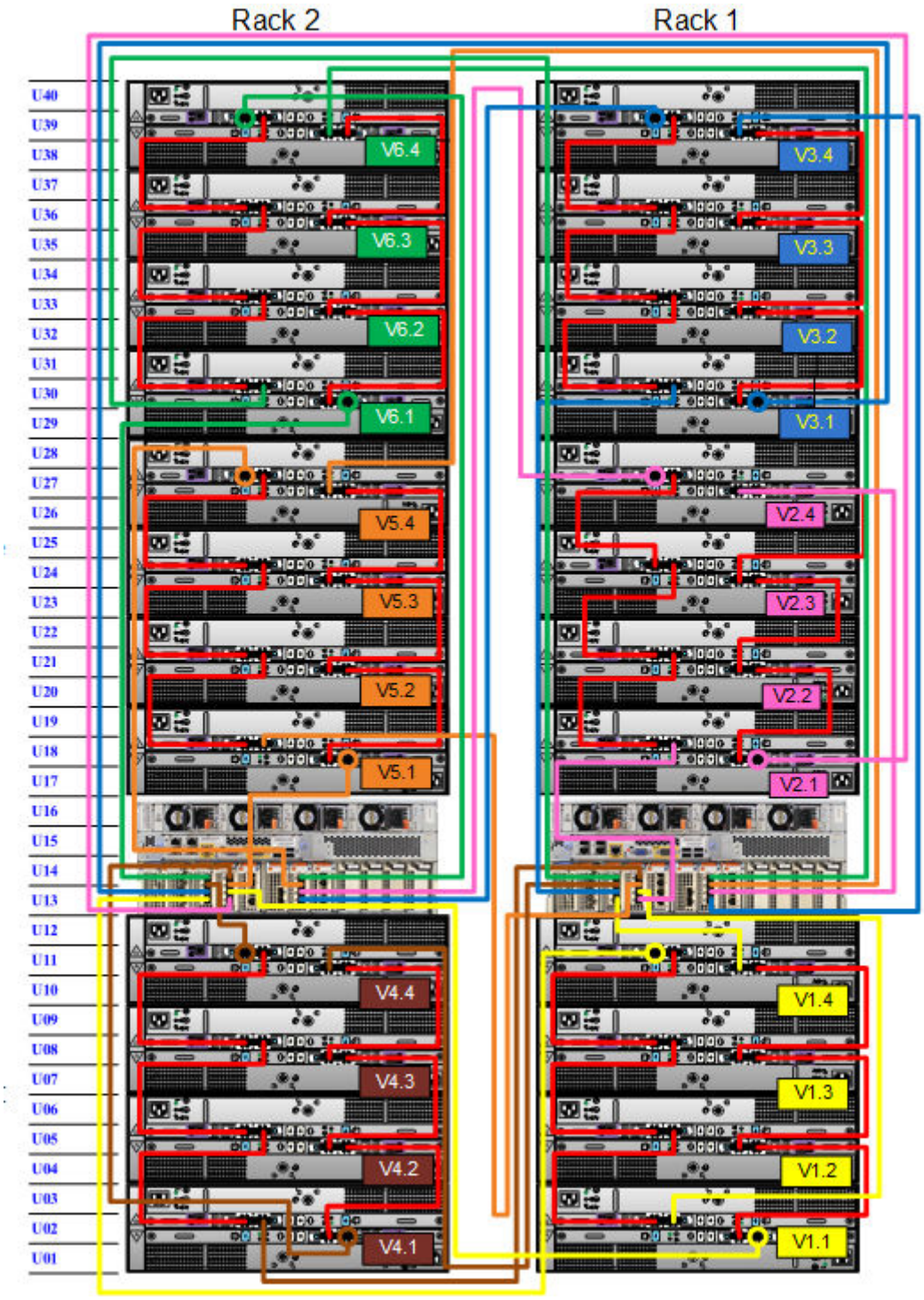

Figure 64. DD9800 with ES30 shelves, HA (two racks)

DD9800 with DD Cloud Tier (Single node or HA)

For a DD9800 system with DD Cloud Tier (Single node or HA):

Table 16. DD9800 with ES30 DD Cloud Tier or HA and DD Cloud Tier primary node cabling instructions

String (Loop)	I/O - Port	Shelf Port	Length [a]
1	I/O 3 - Port 1	B controller HOST ● port of shelf V1.1	2M

Table 16. DD9800 with ES30 DD Cloud Tier or HA and DD Cloud Tier primary node cabling instructions (continued)

String (Loop)	I/O - Port	Shelf Port	Length [a]
1	I/O 2 - Port 0	A controller HOST ● port of the highest number shelf in V1	3M
2	I/O 3 - Port 0	B controller HOST ● port of shelf V2.1	2M
2	I/O 9 - Port 1	A controller HOST ● port of the highest number shelf in V2	2M
3	I/O 2 - Port 1	B controller HOST ● port of shelf V3.1	2M
3	I/O 6 - Port 0	A controller HOST ● port of the highest number shelf in V3	2M
4	I/O 3 - Port 3	B controller HOST ● port of shelf V4.1	3M
4	I/O 2 - Port 2	A controller HOST ● port of the highest number shelf in V4	3M
5	I/O 3 - Port 2	B controller HOST ● port of shelf V5.1	3M
5	I/O 9 - Port 2	A controller HOST ● port of the highest number shelf in V5	3M
6	I/O 2 - Port 3	B controller HOST ● port of shelf V6.1	3M
6	I/O 6 - Port 3	A controller HOST ● port of the highest number shelf in V6	3M

a. Cable lengths shown are designed for Data Domain racks. Longer cables (up to 5M) can be used.

Table 17. DD9800 with ES30 DD Cloud Tier or HA and DD Cloud Tier standby node cabling instructions

String (Loop)	I/O - Port	Shelf Port	Length [a]
1	I/O 3 - Port 1	A controller EXPANSION ◆ port of shelf V1.1	2M
1	I/O 2 - Port 0	B controller EXPANSION ◆ port of the highest number shelf in V1	3M
2	I/O 3 - Port 0	A controller EXPANSION ◆ port of shelf V2.1	2M
2	I/O 9 - Port 1	B controller EXPANSION ◆ port of the highest number shelf in V2	2M
3	I/O 2 - Port 1	A controller EXPANSION ◆ port of shelf V3.1	2M
3	I/O 6 - Port 0	B controller EXPANSION ◆ port of the highest number shelf in V3	2M
4	I/O 3 - Port 3	A controller EXPANSION ◆ port of shelf V4.1	3M
4	I/O 2 - Port 2	B controller EXPANSION ◆ port of the highest number shelf in V4	3M
5	I/O 3 - Port 2	A controller EXPANSION ◆ port of shelf V5.1	3M
5	I/O 9 - Port 2	B controller EXPANSION ◆ port of the highest number shelf in V5	3M
6	I/O 2 - Port 3	A controller EXPANSION ◆ port of shelf V6.1	3M
6	I/O 6 - Port 3	B controller EXPANSION ◆ port of the highest number shelf in V6	3M

a. Cable lengths shown are designed for Data Domain racks. Longer cables (up to 5M) can be used.

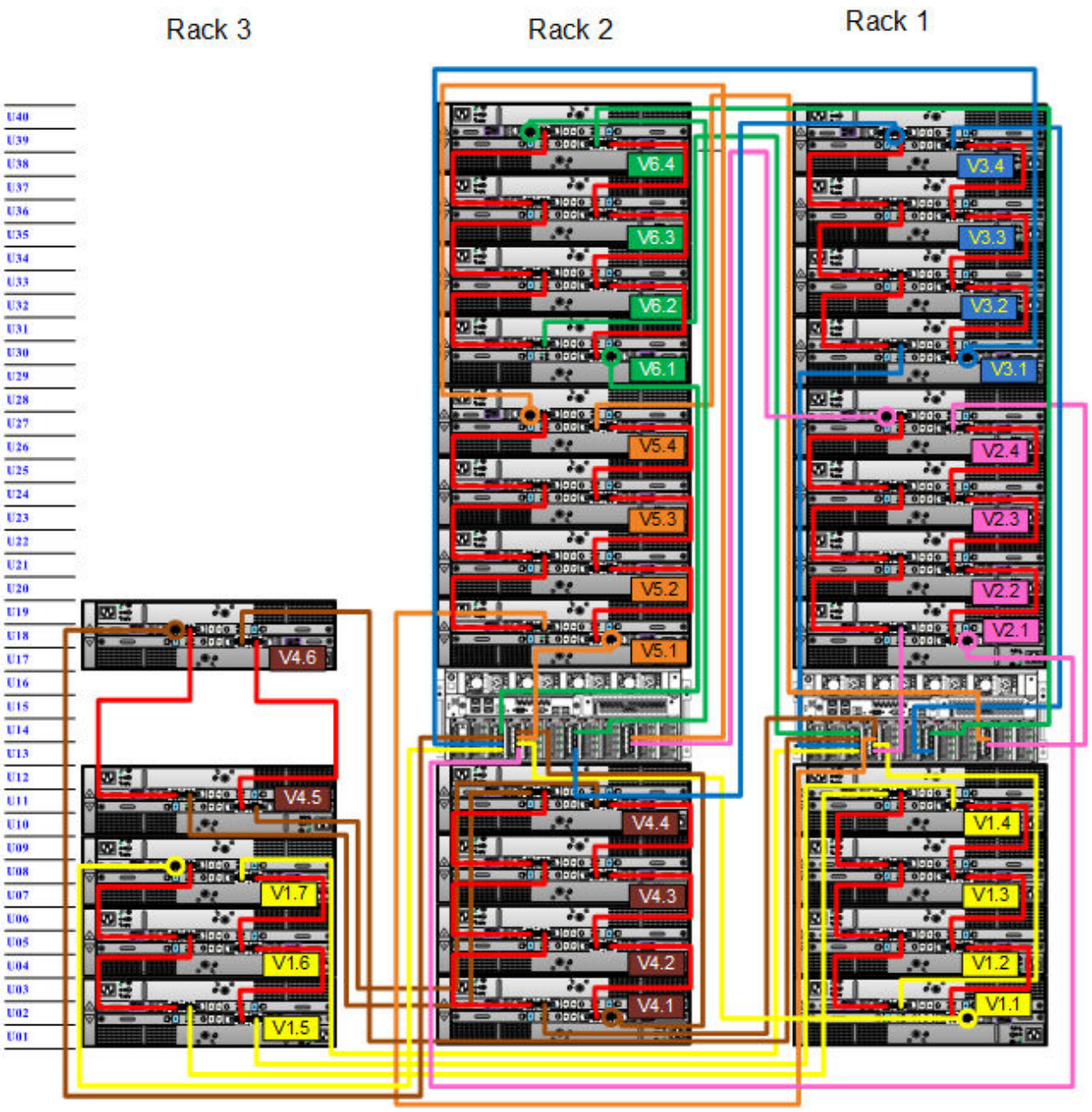

Figure 65. DD9800 with ES30 shelves, DD Cloud Tier or HA and DD Cloud Tier

DD9800 with ERSO

For a DD9800 system with ERSO:

Table 18. DD9800 with ES30 ERSO

String (Loop)	I/O - Port	Shelf Port	Length [a]
1	I/O 3 - Port 1	B controller HOST ● port of shelf V1.1	2M
1	I/O 2 - Port 0	A controller HOST ● port of the highest number shelf in V1	5M
2	I/O 3 - Port 0	B controller HOST ● port of shelf V2.1	2M
2	I/O 9 - Port 1	A controller HOST ● port of the highest number shelf in V2	3M

Table 18. DD9800 with ES30 ERSO (continued)

String (Loop)	I/O - Port	Shelf Port	Length [a]
3	I/O 2 - Port 1	B controller HOST ● port of shelf V3.1	2M
3	I/O 6 - Port 0	A controller HOST ● port of the highest number shelf in V3	3M
4	I/O 3 - Port 3	B controller HOST ● port of shelf V4.1	3M
4	I/O 2 - Port 2	A controller HOST ● port of the highest number shelf in 43	5M
5	I/O 3 - Port 2	B controller HOST ● port of shelf V5.1	3M
5	I/O 9 - Port 2	A controller HOST ● port of the highest number shelf in V5	5M
6	I/O 2 - Port 3	B controller HOST ● port of shelf V6.1	3M
6	I/O 6 - Port 3	A controller HOST ● port of the highest number shelf in V6	5M
7	I/O 9 - Port 0	B controller HOST ● port of shelf V7.1	3M
7	I/O 6 - Port 1	A controller HOST ● port of the highest number shelf in V7	5M
8	I/O 6 - Port 2	B controller HOST ● port of shelf V8.1	5M
8	I/O 9 - Port 3	A controller HOST ● port of the highest number shelf in V8	5M

a. Cable lengths shown are designed for Data Domain racks. Longer cables (up to 5M) can be used.

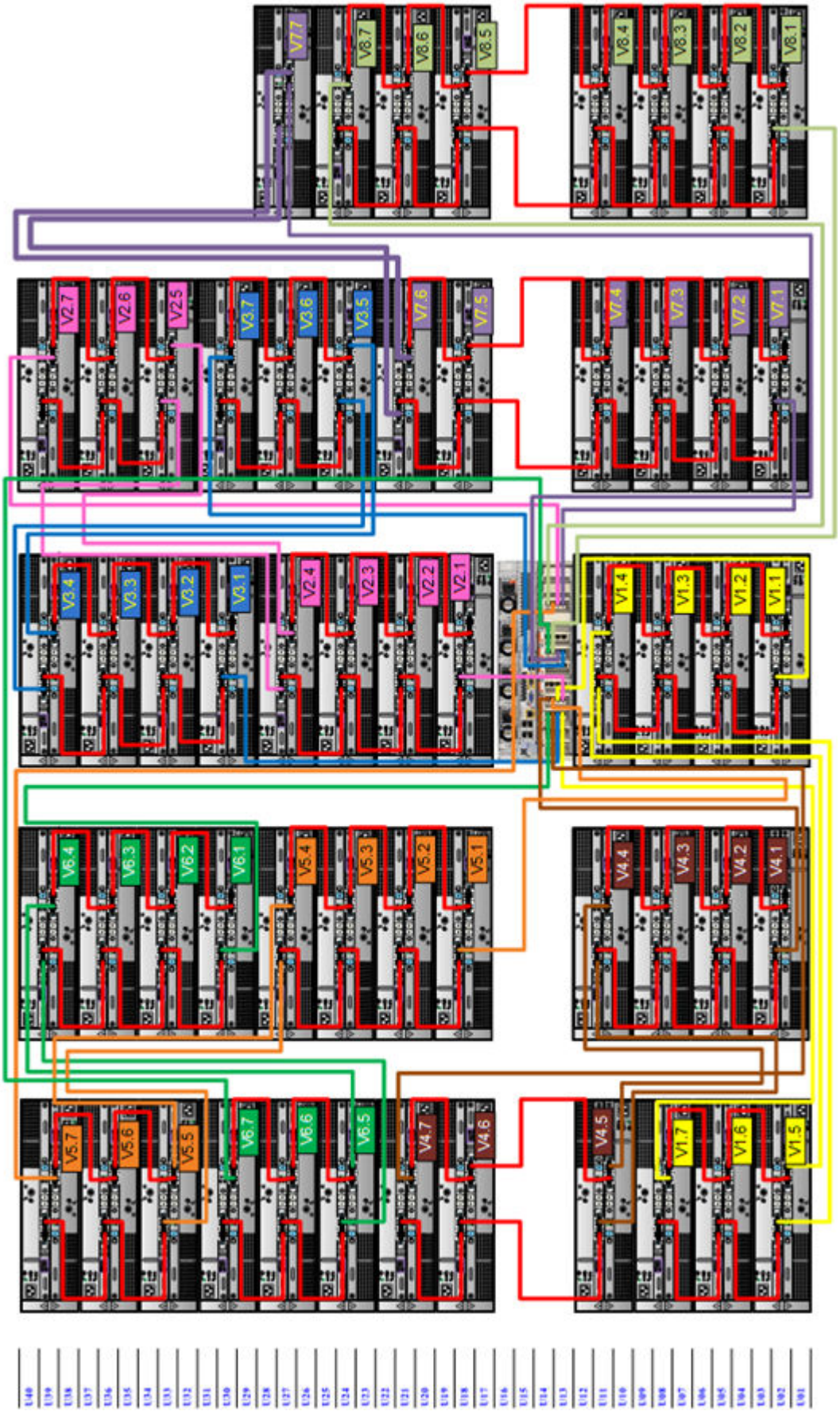

Figure 66. DD9800 with ES30 shelves, ERSO

DS60 cable information

The primary and secondary nodes use the same cable type to connect to DS60 disk shelves.



Figure 67. SAS I/O module to DS60 connector

Table 19. Cables for node 0 and node 1 to DS60 shelf loop

HD-mini-SAS connector on controller and enclosure		
Cable model code	**Part number**	**Cable length**
XC-DS60-SAS-3M	038-004-380-01	3 m (118 in)
XC-DS60-SAS-4M	038-000-212-00	4 m (158 in)
XC-DS60-SAS-5M	038-000-214-00	5 m (196 in)

CAUTION: Observe the following considerations when cabling new shelves:

- **Work on one SAS loop at a time.**
- **Allow at least eight minutes between each cable removal or insertion on a SAS I/O module in the Data Domain controller to allow the Data Domain system to apply required firmware updates and device mapping on the DS60 shelf.**
- **Verify all SAS cables are fully seated at both ends.**
- **If possible, utilize available SAS I/O module connections to add new storage enclosures.**

Connecting multiple DS60 shelves to the DD9800 system

The cabling diagrams in this section show the maximum configurations for the DD9800 systems. Not all systems will have all the disk shelves shown in the diagrams.

Some of the DS60 configurations described in the following sections also include ES30 shelves for DD Cloud Tier metadata, or FS15 shelves for Metadata on flash.

Add shelf-to-shelf cables between shelves in a loop and to the controller as shown in the diagrams.

1. The recommended cabling for DD9800 systems with HA utilizes a maximum of three loops.
2. There are no specific placement or cabling requirements for SSD shelves, or the metadata shelves for DD Cloud Tier configurations. These shelves can be installed and cabled the same way as standard ES30 shelves.
3. The SSD shelf counts towards the total number of shelves connected to the system.
4. Data Domain recommends installing the SSD shelf in the V1.1 positon, but if that is not possible, the shelf can be placed in a different location in the rack so long as cables of sufficient length are available.

   NOTE: V1.1 is recommended for better performance because this will the 1st hop where data will be written. If the SSD shelf is connected to the last enclosure in a chain, then each read/write request has to go through many hops, which introduces latency issues when compared to when the SSD shelf is on the 1st shelf of a chain.
5. Use the cable management assembly to support and organize all cables from the DD9800 system.

Select the appropriate configuration from the following list, and connect the disk shelves to the Data Domain controller.

- DD9800 on page 68
- DD9800 with HA on page 69
- DD9800 with DD Cloud Tier (Single node) on page 72
- DD9800 with DD Cloud Tier (HA) on page 73
- DD9800 with ERSO on page 75

DD9800

For a base DD9800 system:

Table 20. DD9800 with DS60

String (Loop)	I/O - Port	Shelf Port	Length [a]
1	I/O 6 - Port 0	A controller port 0 of shelf V1.1	2M
1	I/O 2 - Port 1	B controller port 0 of the highest number shelf in V1	2M
2	I/O 3 - Port 0	A controller port 0 of shelf V2.1	2M
2	I/O 2 - Port 0	B controller port 0 of the highest number shelf in V2	2M
3	I/O 6 - Port 1	A controller port 0 of shelf V3.1	2M
3	I/O 3 - Port 1	B controller port 0 of the highest number shelf in V3	2M
4	I/O 2 - Port 2	A controller port 0 of shelf V4.1	2M
4	I/O 3 - Port 2	B controller port 0 of the highest number shelf in V4	5M
5	I/O 6 - Port 3	A controller HOST ● port of the SSD shelf	2M
5	I/O 3 - Port 3	B controller HOST ● port of the SSD shelf	2M

a. Cable lengths shown are designed for Data Domain racks. Longer cables (up to 5M) can be used.

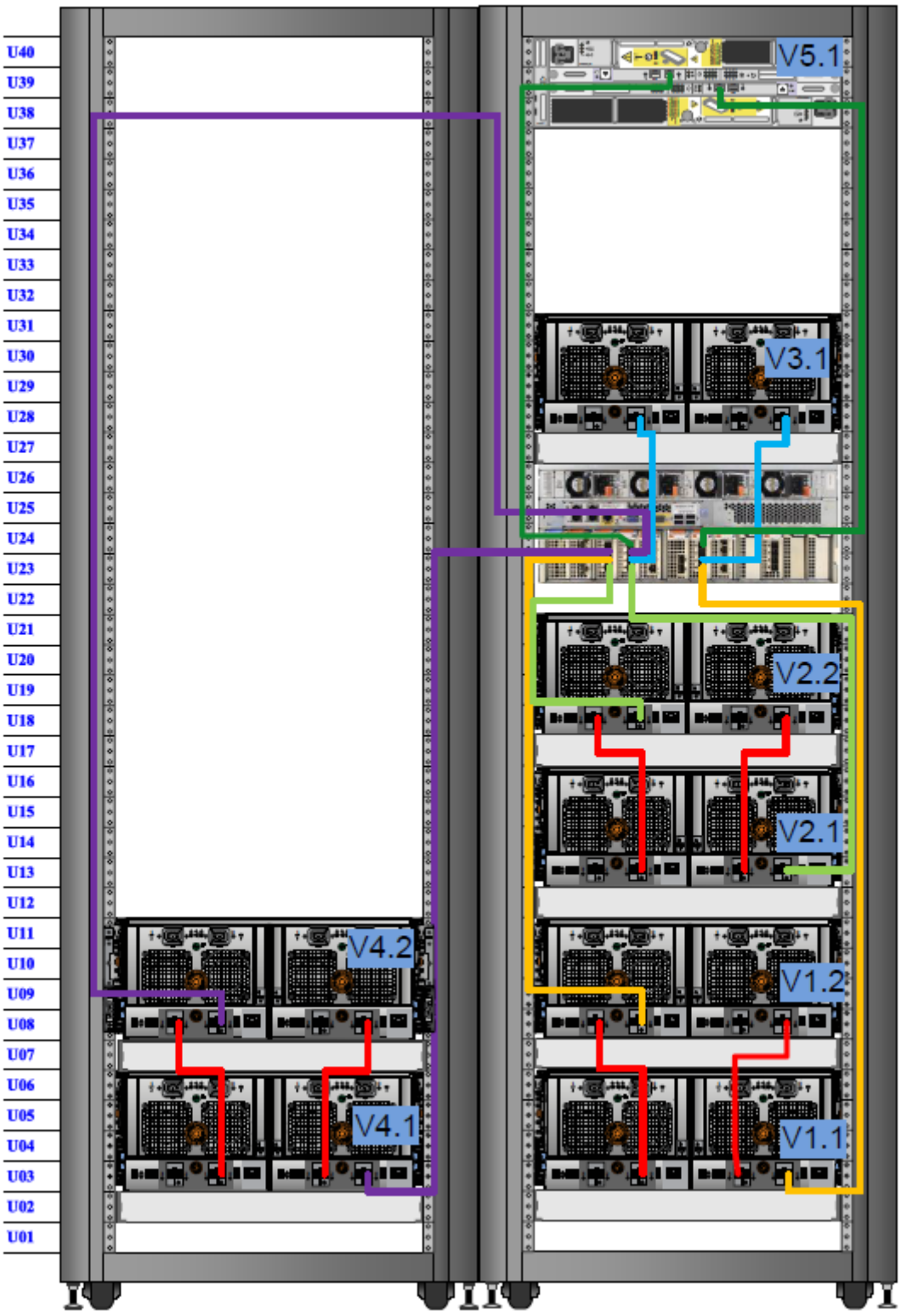

Figure 68. DD9800 with DS60 shelves

DD9800 with HA

For an HA DD9800 pair:

Table 21. DD9800 with DS60 HA primary node cabling instructions

String (Loop)	I/O - Port	Shelf Port	Length [a]
1	I/O 6 - Port 0	A controller port 0 of shelf V1.1	2M
1	I/O 2 - Port 1	B controller port 0 of the highest number shelf in V1	2M
2	I/O 3 - Port 0	A controller port 0 of shelf V2.1	2M
2	I/O 2 - Port 0	B controller port 0 of the highest number shelf in V2	2M
3	I/O 2 - Port 2	A controller port 0 of shelf V3.1	5M
3	I/O 3 - Port 2	B controller port 0 of the highest number shelf in V3	5M
4	I/O 2 - Port 3	A controller port 0 of shelf V4.1	5M
4	I/O 6 - Port 1	B controller port 0 of the highest number shelf in V4	5M
5	I/O 6 - Port 3	A controller HOST ● port of the SSD shelf	2M
5	I/O 3 - Port 3	B controller HOST ● port of the SSD shelf	2M

a. Cable lengths shown are designed for Data Domain racks. Longer cables (up to 5M) can be used.

Table 22. DD9800 with DS60 HA standby node cabling instructions

String (Loop)	I/O - Port	Shelf Port	Length [a]
1	I/O 6 - Port 0	B controller port 2 of shelf V1.1	2M
1	I/O 2 - Port 1	A controller port 2 of the highest number shelf in V1	2M
2	I/O 3 - Port 0	B controller port 2 of shelf V2.1	2M
2	I/O 2 - Port 0	A controller port 2 of the highest number shelf in V2	2M
3	I/O 2 - Port 2	B controller port 2 of shelf V3.1	5M
3	I/O 3 - Port 2	A controller port 2 of the highest number shelf in V3	5M
4	I/O 2 - Port 3	B controller port 2 of shelf V4.1	5M
4	I/O 6 - Port 1	A controller port 2 of the highest number shelf in V4	5M
5	I/O 6 - Port 3	A controller EXPANSION ◆ port of the SSD shelf	2M
5	I/O 3 - Port 3	B controller EXPANSION ◆ port of the SSD shelf	2M

a. Cable lengths shown are designed for Data Domain racks. Longer cables (up to 5M) can be used.

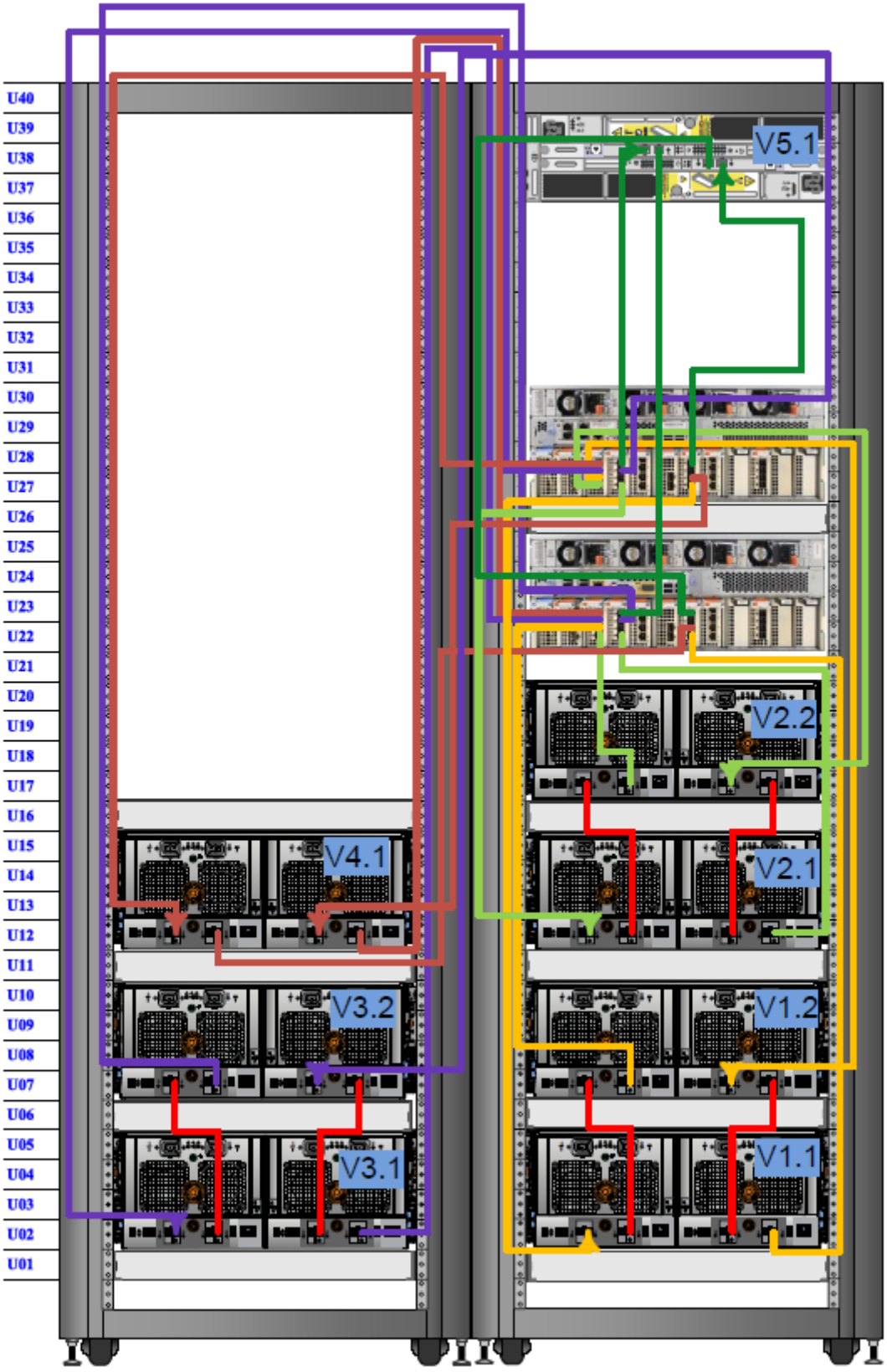

Figure 69. DD9800 with DS60 shelves, HA

DD9800 with DD Cloud Tier (Single node)

For a DD9800 system with DD Cloud Tier:

Table 23. DD9800 with DS60 DD Cloud Tier

String (Loop)	I/O - Port	Shelf Port	Length [a]
1	I/O 6 - Port 0	A controller port 0 of shelf V1.1	2M
1	I/O 2 - Port 1	B controller port 0 of the highest number shelf in V1	2M
2	I/O 3 - Port 0	A controller port 0 of shelf V2.1	2M
2	I/O 2 - Port 0	B controller port 0 of the highest number shelf in V2	2M
3	I/O 9 - Port 2	A controller port 0 of shelf V3.1	2M
3	I/O 3 - Port 1	B controller port 0 of the highest number shelf in V3	2M
4	I/O 2 - Port 2	A controller port 0 of shelf V4.1	5M
4	I/O 3 - Port 2	B controller port 0 of the highest number shelf in V4	5M
5	I/O 2 - Port 3	A controller port 0 of shelf V5.1	5M
5	I/O 9 - Port 0	B controller port 0 of the highest number shelf in V5	5M
6	I/O 6 - Port 3	A controller HOST ● port of the SSD shelf or DD Cloud Tier metadata shelf	2M
6	I/O 3 - Port 3	B controller HOST ● port of the SSD shelf or DD Cloud Tier metadata shelf	2M
7	I/O 9 - Port 3	A controller HOST ● port of the SSD shelf or DD Cloud Tier metadata shelf	2M
7	I/O 6 - Port 2	B controller HOST ● port of the SSD shelf or DD Cloud Tier metadata shelf	2M

a. Cable lengths shown are designed for Data Domain racks. Longer cables (up to 5M) can be used.

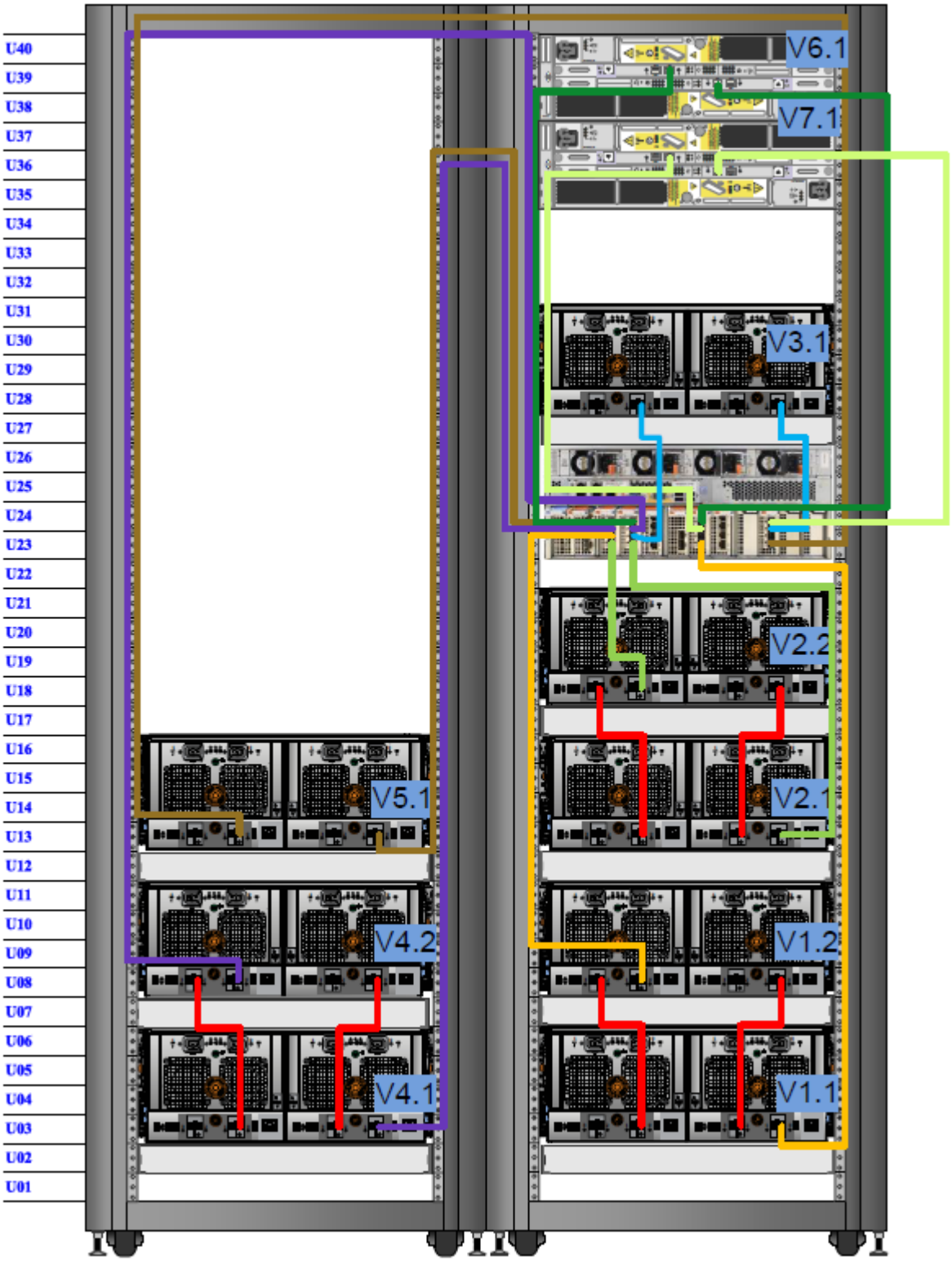

Figure 70. DD9800 with DS60 shelves, DD Cloud Tier

DD9800 with DD Cloud Tier (HA)

For an HA DD9800 pair with DD Cloud Tier:

Table 24. DD9800 with DS60 HA and DD Cloud Tier primary node cabling instructions

String (Loop)	I/O - Port	Shelf Port	Length [a]
1	I/O 6 - Port 0	A controller port 0 of shelf V1.1	2M
1	I/O 2 - Port 1	B controller port 0 of the highest number shelf in V1	2M
2	I/O 3 - Port 0	A controller port 0 of shelf V2.1	2M
2	I/O 2 - Port 0	B controller port 0 of the highest number shelf in V2	2M
3	I/O 2 - Port 2	A controller port 0 of shelf V3.1	5M
3	I/O 3 - Port 2	B controller port 0 of the highest number shelf in V3	5M
4	I/O 2 - Port 3	A controller port 0 of shelf V4.1	5M
4	I/O 6 - Port 1	B controller port 0 of the highest number shelf in V4	5M
5	I/O 6 - Port 3	A controller HOST ● port of the SSD shelf or DD Cloud Tier metadata shelf	2M
5	I/O 3 - Port 3	B controller HOST ● port of the SSD shelf or DD Cloud Tier metadata shelf	2M
6	I/O 9 - Port 3	A controller HOST ● port of the SSD shelf or DD Cloud Tier metadata shelf	2M
6	I/O 6 - Port 2	B controller HOST ● port of the SSD shelf or DD Cloud Tier metadata shelf	2M

a. Cable lengths shown are designed for Data Domain racks. Longer cables (up to 5M) can be used.

Table 25. DD9800 with DS60 HA and DD Cloud Tier standby node cabling instructions

String (Loop)	I/O - Port	Shelf Port	Length [a]
1	I/O 6 - Port 0	B controller port 2 of shelf V1.1	2M
1	I/O 2 - Port 1	A controller port 2 of the highest number shelf in V1	2M
2	I/O 3 - Port 0	B controller port 2 of shelf V2.1	2M
2	I/O 2 - Port 0	A controller port 2 of the highest number shelf in V2	2M
3	I/O 2 - Port 2	B controller port 2 of shelf V3.1	5M
3	I/O 3 - Port 2	A controller port 2 of the highest number shelf in V3	5M
4	I/O 2 - Port 3	B controller port 2 of shelf V4.1	5M
4	I/O 6 - Port 1	A controller port 2 of the highest number shelf in V4	5M
5	I/O 6 - Port 3	A controller EXPANSION ◆ port of the SSD shelf or DD Cloud Tier metadata shelf	2M
5	I/O 3 - Port 3	B controller EXPANSION ◆ port of the SSD shelf or DD Cloud Tier metadata shelf	2M
6	I/O 9 - Port 3	A controller EXPANSION ◆ port of the SSD shelf or DD Cloud Tier metadata shelf	2M
6	I/O 6 - Port 2	B controller EXPANSION ◆ port of the SSD shelf or DD Cloud Tier metadata shelf	2M

a. Cable lengths shown are designed for Data Domain racks. Longer cables (up to 5M) can be used.

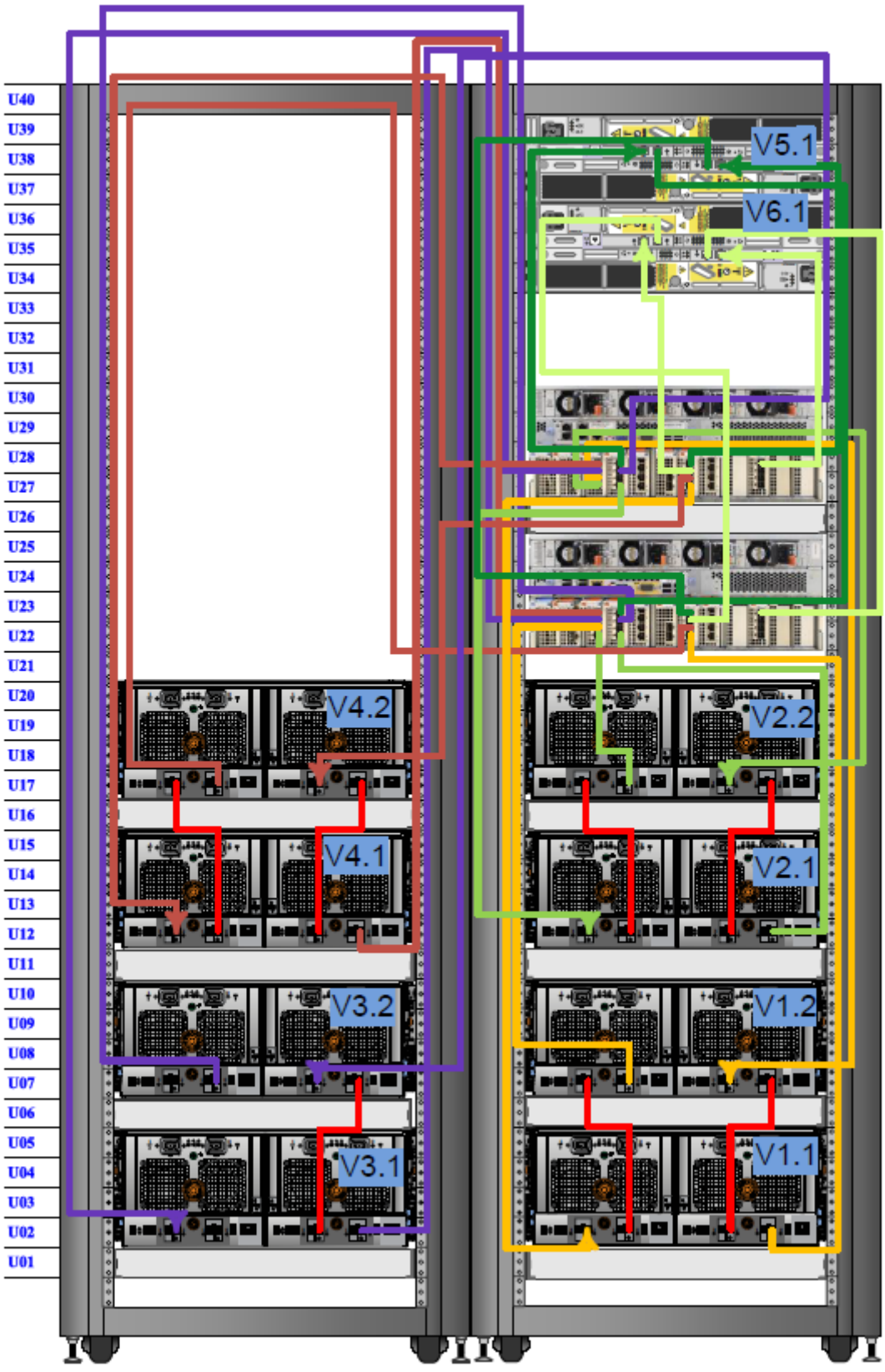

Figure 71. DD9800 with DS60 shelves, HA and DD Cloud Tier

DD9800 with ERSO

For a DD9800 system with ERSO:

Table 26. DD9800 with DS60 ERSO cabling instructions

String (Loop)	I/O - Port	Shelf Port	Length [a]
1	I/O 6 - Port 0	A controller port 0 of shelf V1.1	2M
1	I/O 2 - Port 1	B controller port 0 of the highest number shelf in V1	2M
2	I/O 3 - Port 0	A controller port 0 of shelf V2.1	2M
2	I/O 2 - Port 0	B controller port 0 of the highest number shelf in V2	2M
3	I/O 9 - Port 2	A controller port 0 of shelf V3.1	2M
3	I/O 3 - Port 1	B controller port 0 of the highest number shelf in V3	5M
4	I/O 2 - Port 2	A controller port 0 of shelf V4.1	5M
4	I/O 3 - Port 2	B controller port 0 of the highest number shelf in V4	5M
5	I/O 2 - Port 3	A controller port 0 of shelf V5.1	5M
5	I/O 9 - Port 0	B controller port 0 of the highest number shelf in V5	5M
6	I/O 9 - Port 3	A controller port 0 of shelf V6.1	5M
6	I/O 6 - Port 1	B controller port 0 of the highest number shelf in V6	5M
7	I/O 6 - Port 2	A controller port 0 of shelf V7.1	5M
7	I/O 9 - Port 1	B controller port 0 of the highest number shelf in V7	5M
8	I/O 6 - Port 3	A controller HOST ● port of the SSD shelf or DD Cloud Tier metadata shelf	2M
8	I/O 3 - Port 3	B controller HOST ● port of the SSD shelf or DD Cloud Tier metadata shelf	2M

a. Cable lengths shown are designed for Data Domain racks. Longer cables (up to 5M) can be used.

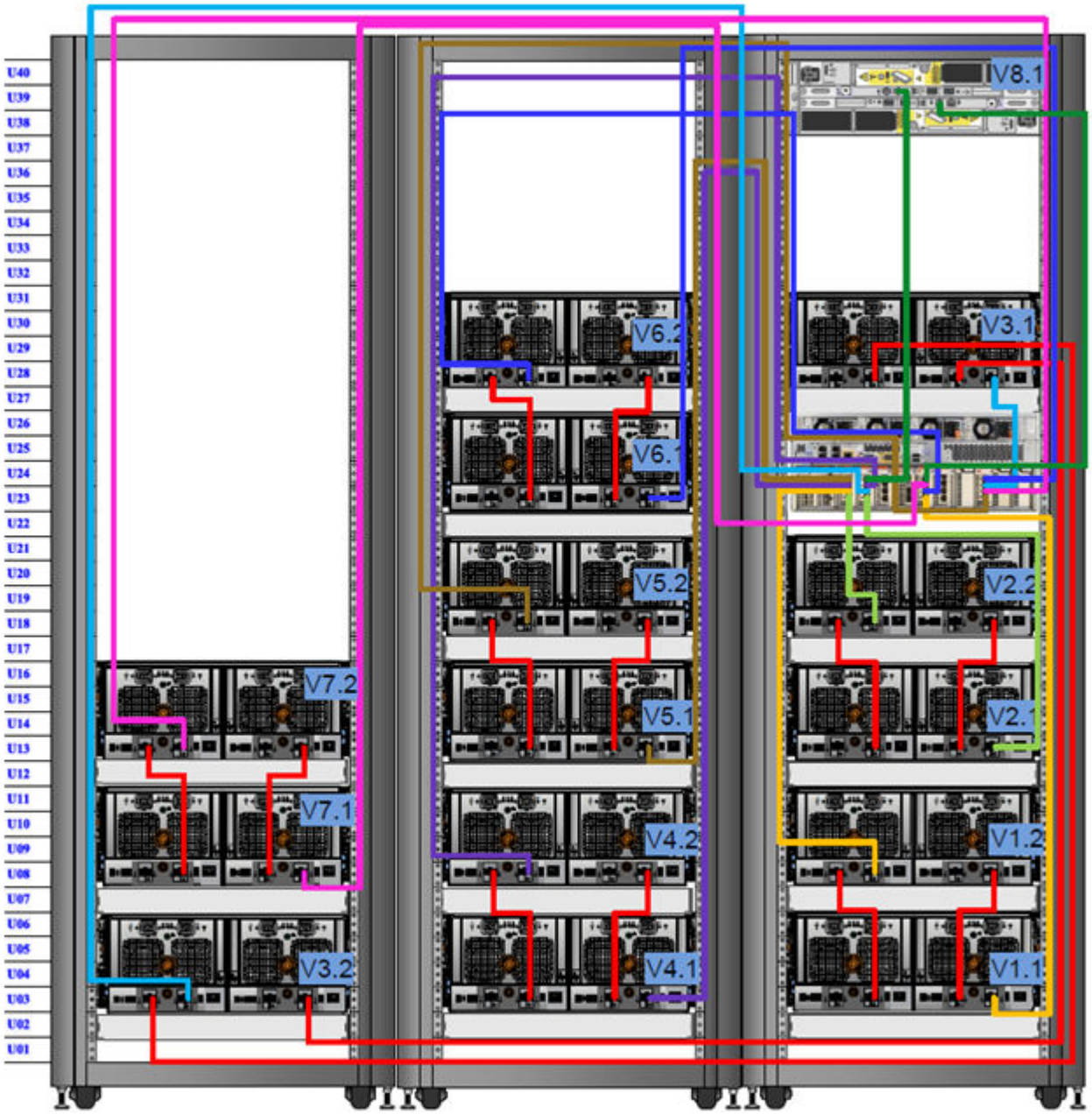

Figure 72. DD9800 with DS60 shelves, ERSO

Connecting the HA interconnect

About this task

The HA interconnect consists of a 10 GbE I/O module in slot 11 of each node in the HA pair. This connection between the two nodes provides the standby node with the information it needs to failover if the active node suffers a failure, and maintain the connections to hosts and clients after the failover is complete.

NOTE:

- The interconnect IP address is automatically configured with the IPv6 prefix d:d:d:d:d:/80
- If there is an IP conflict, set the registry key `config.net.interconnect_ip6prefix`.

Steps

1. Refer to the diagram for the port connections.

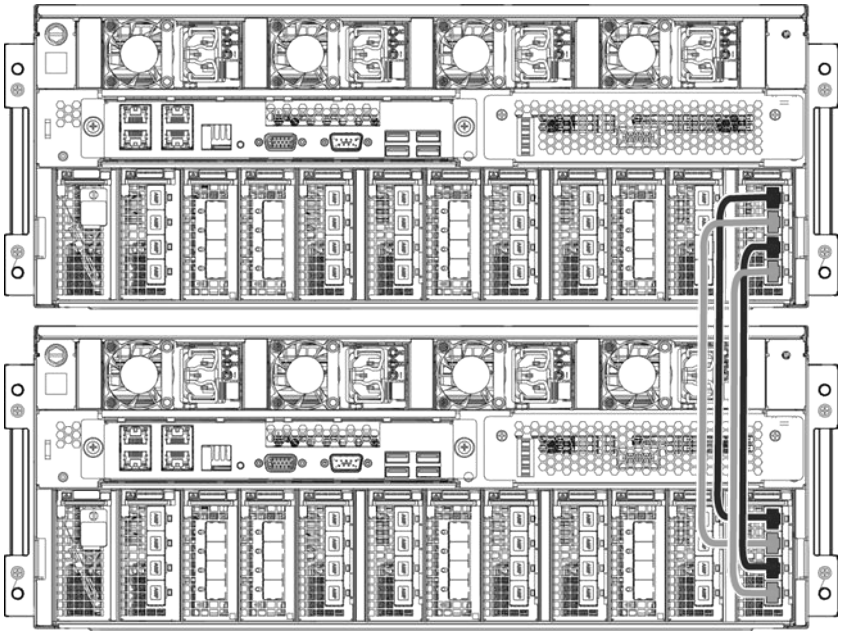

Figure 73. DD9800 HA interconnect

2. Cable port 0 of the interconnect I/O module in node 0, slot 11 to port 0 of the interconnect I/O module in node 1, slot 11.
3. Cable port 1 of the interconnect I/O module in node 0, slot 11 to port 1 of the interconnect I/O module in node 1, slot 11.
4. Cable port 2 of the interconnect I/O module in node 0, slot 11 to port 2 of the interconnect I/O module in node 1, slot 11.
5. Cable port 3 of the interconnect I/O module in node 0, slot 11 to port 3 of the interconnect I/O module in node 1, slot 11.

Connect data cables on both nodes

NOTE: The data cabling for both nodes of the HA pair must be identical.

1. Enable data transfer Ethernet connectivity. Repeat for each connection.
   a. If using 1 Gb copper Ethernet, attach a Cat 5e or Cat 6 copper Ethernet cable to an RJ-45 Ethernet network port (start with ethMa and go up).
   b. If using 10 Gb copper Ethernet with an SFP+ connector, use a qualified SFP+ copper cable.
   c. If using 1/10 Gb fiber Ethernet, use MMF-850nm cables with LC duplex connectors.
   d. For 10GBaseT connections, use Cat6a S-STP Ethernet cables.
2. Enable data transfer Fibre Channel (FC) connectivity. Repeat for each connection.
   a. Attach a Fibre Channel fiber optical cable (LC connector) to an I/O module port on the controller, and attach the other end (LC connector) to an FC switch or to an FC port on your server.

Power on the systems

Power the system on in the following order:

1. Expansion shelves
2. Active node
3. Standby node

Complete the following steps to power on the system:

1. Connect power cables to each expansion shelf receptacle and attach the retention clips.
2. Provide power to power on each expansion shelf. The shelves power on when plugged in. Ensure that each shelf power cable is connected to a different power source.

   NOTE: Wait approximately 3 minutes after all expansion shelves are powered on before powering on the controller.
3. Provide power to power on the controller. Amber fault LEDs should turn on for all four power supplies.

NOTE: The DD9800 system should be powered from redundant AC sources. This enables one AC source to fail or be serviced without impacting system operation. PSU0 and PSU1 should be attached to one AC source. PSU2 and PSU3 should be attached to the other AC source.

a. Connect power cables to each receptacle and attach the retention clips.
b. Ensure that each power supply is connected to a different power source.

Install the bezel

About this task

Install the bezel on the front of the system.

Steps

Install the bezel on your DD9800 system by grasping both hand holds and pressing toward the center of the bezel until the latches attach to the sides of the chassis. The red circles identify the latches on each bezel. Make sure the handhold locks lock into place.

5

Configure System for Use

Topics:

- Enable administrative communication
- Accepting the End User License Agreement
- Run the configuration wizard
- Configuring additional system parameters
- Configure HA for new installations

Enable administrative communication

For HA pairs, administrative communication must be enabled on both nodes.

The administrative interfaces are located on the management module on the rear of the chassis. These interfaces are for management network traffic only. Do not use these interfaces for data traffic.

1. Connect an administrative console to the serial port on the back panel of the system.
2. **NOTE:** You must have 115200 baud rate for the DD9800 system to work properly; 9600 baud rate will not work for the DD9800 system.

   Launch a terminal emulation program from your computer and configure the following communication settings:

   Table 27. Communications settings

Setting	Value
Baud rate	115200
Data bits	8
Stop bits	1
Parity	None
Flow control	None
Emulation	VT-100

3. Select `Enter` on your keyboard to activate the console.

   NOTE: If you do not see the prompt on your terminal to log in, then complete Step 4.
4. In the front of theDD9800 system, press the power button to power on the system. Check that the front blue power LED (with the circle with a dot) also turns on.

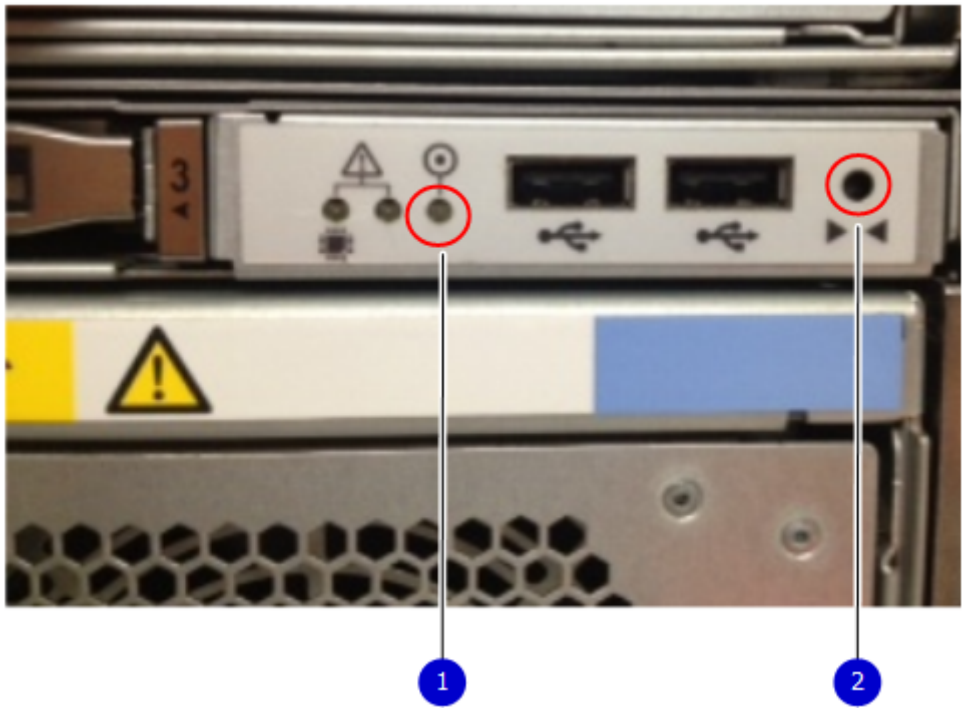

Figure 74. Power LED and power button

1. Power LED
2. Power button

5. **NOTE:** The initial username is `sysadmin` and the initial password is the system serial number.

   Log into the Data Domain console using the `sysadmin` username.

   ```
   localhost.localdomain login: sysadmin
   ```

6. Enter the default password, which is the system serial number (SSN). The SSN is on the attached tag on the rear panel of the system. See the rear panel of the DD9800 system for the SSN tag.

   ```
   Password: system_serial_number
   ```

   NOTE: Configuring an HA pair sets the system password on the standby node to match the system password on the active node, however, that synchronization is not set until the HA configuration is complete. If the HA configuration fails, or if there is a need to access either node before the HA configuration is complete, use the serial number of each node as the password.

NOTE: If you enter an incorrect password four consecutive times, the system locks out the specified username for 120 seconds. The login count and lockout period are configurable and might be different on your system. See the *Data Domain Operating System Administration Guide* and the *Data Domain Operating System Command Reference Guide* for setting these values.

For Data Domain HA systems, SSH keys created on the active node take 30 seconds to one minute to propagate to the standby node.

Accepting the End User License Agreement

The first time you log in to a Data Domain system, the End User License Agreement (EULA) is displayed.

At the end of the EULA, you are prompted to accept it:

```
Press any key then hit enter to acknowledge the receipt of EULA information
```

NOTE: The EULA *must* be accepted by a customer. A Data Domain representative should *not* accept this agreement. If a customer is not present, press **Ctrl-C** to exit from the EULA acceptance screen and continue the installation.

The customer can later enter the following to redisplay the EULA and accept it:

```
system show eula
```

Run the configuration wizard

The CLI configuration wizard starts automatically the first time the system boots. The wizard prompts you through a series of questions that provide just enough information for initial system configuration and basic network connectivity.

NOTE: You can initiate the CLI configuration wizard manually by entering the **`config setup`** command.

Configuring the network

Steps

1. Enter **`yes`** to configure the system for network connectivity.

   ```
   Network Configuration
   Configure Network at this time (yes|no) [no]:
   yes
   ```

2. Enter **`yes`** to configure DHCP (Dynamic Host Configuration Protocol) to obtain network parameters (such as, the host name, domain name, and IP addresses) dynamically from a DHCP server. Or enter **`no`** to configure the parameters manually.

   ```
   Use DHCP
   Use DHCP for hostname, domainname, default gateway
   and DNS servers? (At least one interface needs to
   be configured using DHCP)  (yes|no|?)
   ```

3. Enter a fully qualified domain name (FQDN) for the host name; for example, **`str01.yourcompany.com`**. Or accept the host name, if the system was able to discover it.

   ```
   Enter the hostname for this system
   (fully-qualified domain name)[]:
   ```

4. Enter the DNS (Domain Name System) domain name; for example, **`yourcompany.com`**. Or accept the domain name, if the system was able to discover it.

   ```
   Domainname
   Enter your DNS domainname []:
   ```

5. Enable and configure each Ethernet interface. Accept or decline DHCP for each interface. If the port does not use DHCP to discover network parameters automatically, enter the information manually.

   ```
   Ethernet port eth0a
   Enable Ethernet port eth0a (yes|no|?) [yes]:
   no

   Ethernet port eth0b
   Enable Ethernet port eth0b (yes|no|?) [no]:
   yes

   Use DHCP on Ethernet port eth0b (yes|no|?) [no]:

   Enter the IP address for eth0b [192.168.10.185]:

   Enter the netmask for eth0b [255.255.255.0]:
   ```

6. Enter the IP address of the default routing gateway. Or accept the default gateway, if the system was able to discover it.

   ```
   Default Gateway
   Enter the default gateway IP address:
   192.168.10.1
   ```

7. Enter the IPv6 address of the default routing gateway or accept the IPv6 address of the default gateway if the system was able to discover it. If IPv6 is not in use, leave the field empty, and press **`Enter`** to continue.

   ```
   IPV6 Default Gateway
   Enter the ipv6 default gateway IP address:
   ```

8. Enter up to three DNS servers to use for resolving host names to IP addresses. Use a comma-separated or space-separated list. Enter a space for no DNS servers. Or accept the IP addresses of the DNS servers, if the system was able to discover them.

```
DNS Servers
Enter the DNS Server list (zero, one, two or three IP addresses):
192.168.10.1
```

9. A summary of the network settings is displayed. You can accept the settings (**Save**), reject the settings and exit to the CLI (**Cancel**), or return to the beginning of the current section and change the settings (**Retry**). Entering **Retry** displays your previous responses for each prompt. Press **Return** to accept the displayed value or enter a new one.

```
Pending Network Settings
Hostname          ddbeta1.dallasrdc.com
Domain name       dallasrdc.com
Default Gateway   192.168.10.1
DNS Server List   192.168.10.1
Port       Enabled      Cable      DHCP       IP Address         Netmask or Prefix Length
-----      -------      -----      ----       --------------     ------------------------
eth0a      no           no         n/a        n/a                n/a
eth0b      no           no         n/a        n/a                n/a
eth0c      no           no         n/a        n/a                n/a
eth0d      no           no         n/a        n/a                n/a
ethMa      yes          yes        no         192.168.10.181     255.255.255.0
ethMb      no           no         n/a        n/a                n/a
ethMc      no           no         n/a        n/a                n/a
ethMd      no           no         n/a        n/a                n/a
ethMe      no           no         n/a        n/a                n/a
ethMf      no           no         n/a        n/a                n/a
-----      -------      -----      ----       --------------     ------------------------
Do you want to save these settings (Save|Cancel|Retry):
```

Configuring additional system parameters

About this task

Most installations would benefit from the configuration of a few additional system parameters, provided in this section for convenience.

NOTE: You can also use the Data Domain (DD) System Manager GUI interface to configure the system parameters. Open a web browser, and enter your Data Domain system's IP address in the browser's address text box. Log in when the DD System Manager login screen displays. Use the DD System Manager online help for more information.

Steps

1. To set up the mail server, enter:

```
# config set mailserver mail.datadomain.com
The Mail (SMTP) server is: mail.datadomain.com
```

2. To set up the system location, enter:

```
# config set location "Dallas Regional Data Center Lab,
5000 Apple Drive Suite #130, Dallas, Tx"
The System Location is: Dallas Regional Data Center Lab,
5000 Apple Drive Suite #130, Dallas, Tx
```

3. To add one or more time servers, enter:

   NOTE: HA configuration requires that the two nodes maintain a time difference of no more than 10 seconds.

```
# ntp add timeserver 192.168.101.1
Remote Time Servers: 192.168.10.1
```

4. To enable the NTP daemon, enter:

```
# ntp enable
NTP enabled.
```

5. To change the system time zone, enter:

```
# config set timezone US/Central
The Timezone name is: US/Central
*** You made a change to the timezone setting.  To fully effect this change
*** (in currently running processes), you need to reboot the machine.
```

6. Reboot the primary node for the time zone change to take effect:

```
# system reboot

The 'system reboot' command reboots the system. File access is interrupted during the
reboot.
Are you sure? (yes|no|?) [no]: yes

ok, proceeding.
The system is going down for reboot.
```

7. After the system completes the reboot, login again as **sysadmin** using the serial number as a password. Press **Ctrl-C** to get through the EULA, sysadmin password prompt, and config setup wizard.
8. Generate an autosupport sent to yourself to use as ACG input:

```
# autosupport send your.email@emc.com
OK: Message sent.
```

9. Generate an ACG using the produced ASUP.

Configure HA for new installations

Prerequisites

- The HA interconnect between both nodes is connected.
- The data connections on both nodes are connected.

About this task

Configure the two nodes as an HA pair.

NOTE: Configuring an HA pair sets the system password on the standby node to match the system password on the active node, however, that synchronization is not set until the HA configuration is complete. If the HA configuration fails, or if there is a need to access either node before the HA configuration is complete, use the serial number of each node as the password.

Steps

1. Verify the certificate subject name on the primary node.

   Run the following command: `adminaccess certficate show`

```
sysadmin@dd-ha3a# adminaccess certificate show
Subject                      Type   Application   Valid From                Valid Until
--------------------------   ----   -----------   ------------------------
------------------------
dd-ha3a.example.com          host   https         Tue Aug  8 14:11:28 2018   Sat Aug  7
21:11:28 2022
dd-ha3a.example.com          ca     trusted-ca    Tue Aug  8 21:04:53 2018   Mon Aug  7
21:04:53 2024
--------------------------   ----   -----------   ------------------------
------------------------
```

2. Verify the certificate subject name on the standby node.

   Run the following command: `adminaccess certficate show`

```
sysadmin@dd-ha3b# adminaccess certificate show
Subject                      Type   Application   Valid From                Valid Until
--------------------------   ----   -----------   ------------------------
------------------------
dd-ha3b.example.com          host   https         Tue Aug  8 15:11:28 2018   Sat Aug  7
22:11:28 2022
dd-ha3b.example.com          ca     trusted-ca    Tue Aug  8 22:04:53 2018   Mon Aug  7
22:04:53 2024
```

```
-------------------------   ----   -----------   ------------------------
-----------------------
```

3. Complete one of the following options:
   - If the values in the `Subject` column on both nodes are different, continue to Step 4.
   - If the values in the `Subject` column on both nodes are the same:
     a. Change the hostname of the standby node.
     b. Run the `adminaccess certificate generate self-signed-cert regenerate-ca` command on the standby node to generate new certificates with the new hostname.
     c. Proceed to Step 4.
4. Set the system time on both nodes. The HA configuration will fail if the time on the two nodes is more than 10 seconds apart.

   Run the following command: `system set date MMDDhhmm [[CC] YY]`

   NOTE: After HA configuration is complete, point both nodes to an NTP or Active Directory time server.

5. Turn off DHCP for each port used for the HA interconnect on both nodes.

   Run the following command: `net config <HA-interconnect-port> dhcp off`
6. On the primary node, create the HA pairing.

   NOTE:
   - Specify the hostname or the IP address of the standby node.
   - The `ha create` command will fail if one node is configured to use DHCP and the other node is configured to use static IP addresses. Both nodes must use the same method to configure IP addresses.

   Run the following command: `ha create peer {<ipaddr> | <hostname>} [ha-name <ha-system-name>]`

   NOTE: If no value is specified for the optional `ha-name` parameter, the `ha create` command promotes the primary node hostname to be the HA system name.

   ```
   ha create peer mysystem-p1.emc.com
   ```

   This command:
   - Reboots both nodes, and completes the HA pairing when the nodes come back online.
   - Assigns node 0 the local hostname *<HA-system-name>*-p0.
   - Assigns node 1 the local hostname *<HA-system-name>*-p1.
7. When both nodes are up, verify the following information matches on both nodes:
   - Hardware model
   - Software version
8. Check the system for alerts.

   Run the following command: `alerts show current`

   If the system displays `System is misconfigured`, the SSDs were not removed from the front of the primary node. Run the `enclosure show misconfiguration` command to get more details.
9. Verify the HA status

   Run the following command: `ha status`

   ```
   HA System Name: dd-ha3a.emc.com
   HA System Status: highly available
   Node Name                  Node ID   Role      HA State
   -------------------------- --------- --------- --------
   dd-ha3a-p0.example.com 0         active    online
   dd-ha3a-p1.example.com 1         standby   online
   -------------------------- --------- --------- --------
   ```
10. On node 0, convert all data IP addresses to floating IP addresses.

    Run the following command for each IP address that needs to be converted to a floating IP address: `net config <interface-name> <IP address> netmask <netmask> type floating`

    NOTE: The `net config` command with the float option is the only way to configure a floating IP address. There is no method available in DD System Manager to configure a floating IP address.

```
# net config eth1a 2.2.2.1 netmask 255.255.255.0 type floating
```

11. Add the SSD enclosure to cache tier.
    Run the following command: `storage add tier cache enclosure<enclosure number>`
12. Enable the filesystem on node 0.
    Run the following command: `filesys enable`

A

Add Storage Capacity

The system supports capacity expansion operations by adding new disks or disk shelves while the system is powered on. The chapter contained in this part provides overview information and instructions to verify the system health before adding storage to the system.

If the total capacity after the expansion will exceed 630 TB, complete the memory expansion as described in the *Data Domain DD9500 and DD9800 Systems DIMM and Riser Card Replacement and Memory Upgrade* and the cache SSD expansion described in this document.

Topics:

- Prepare system for storage expansion
- Add Cache Tier storage
- Install and connect the new storage
- Add a new disk pack to an existing DS60
- Verify and configure the new disks
- License the new storage with electronic licensing
- Expand the file system

Prepare system for storage expansion

About this task

Verify the system is healthy and ready for expansion before proceeding with the upgrade procedure.

Steps

1. Log in as a sysadmin user.
2. Display the current alerts on the system.

   Run the following command: `alerts show current`

   ```
   # alerts show current
   No active alerts.
   ```
3. Resolve all displayed alerts.
4. Run the `filesys disable` command to disable the file system.

Add Cache Tier storage

Upgrading the Active Tier storage capacity on a DD9800 system above 630 TB raw (504 TB usable) requires adding a total of seven additional cache SSDs to the FS15 shelf.

Prerequisites

Complete the memory upgrade procedure as described in the *Data Domain DD9500/DD9800 System DIMM and Memory Card Riser Replacement and Memory Upgrade* before adding new cache SSDs.

About this task

There are eight cache SSDs located in slots 0-7 of the FS15 shelf. Active Tier capacity upgrades above 630 TB require 15 SSDs installed in the FS15 shelf

NOTE: The drive slot/locations are marked on the chassis 0-14, but the DDOS software still references the slots as 1-15. It is important to identify the proper drive between the location called out in the procedure, and the location as specified in the software.

Steps

1. Run the `storage show tier cache` command verify the enclosure number of the SSD shelf.

```
# storage show tier cache

Cache tier details:
Disk   Disks    Count   Disk        Additional
Group                   Size        Information
------ -------- ------  ----------- ------------
dgX    2.1-2.8  8       745.22 GiB
------ -------- ------  ----------- ------------
Current cache tier size: 5.96 TiB
Cache tier maximum capacity: 5.96 TiB
```

2. Run the `enclosure beacon` command to activate the beacon to physically identify the SSD shelf.

```
# enclosure beacon 2
```

3. Remove the disk fillers in disk slots 8-14.
4. Install the SSDs in slots 8-14.
   a. Grasp the disk filler with you thumb in the cutout on the front of the filler and your finger on the top of the filler and pull the module from the slot.

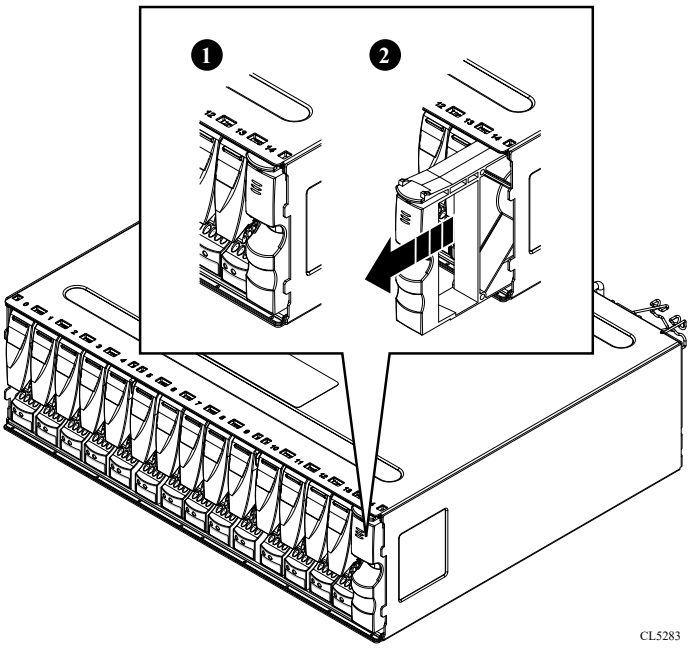

Figure 75. Removing a disk filler module

   b. Align the disk with the guides in the slot.
   c. With the disk latch fully open, gently push the disk into the slot.
   The disk latch begins to rotate downward when its tabs meet the enclosure.
   d. The disk latch begins to rotate downward when its tabs meet the enclosure.
   e. After the latch is engaged, push firmly on the bottom of the disk to verify that the disk is properly seated.

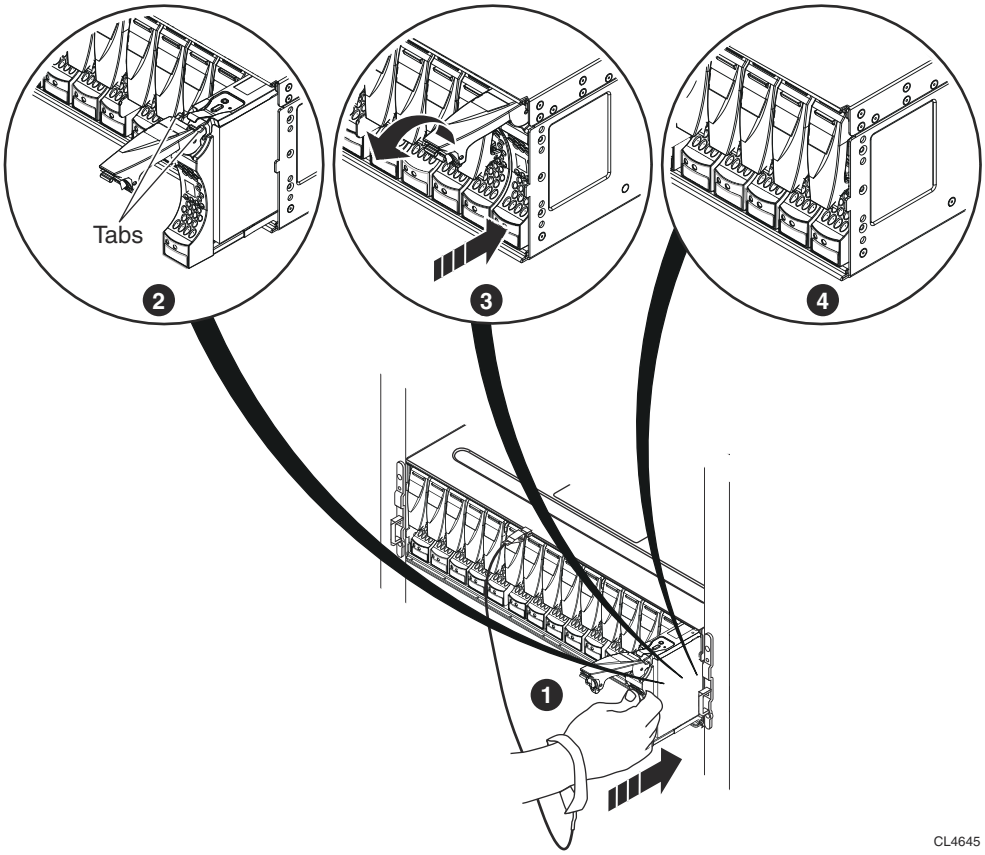

Figure 76. Installing a disk

The disk's active light flashes to reflect the disk's spin-up sequence.

5. If required, apply the Cache Tier license.
6. Run the `storage add disks` command to add the new SSDs to the Cache Tier.

```
#  storage add disks 2.9,2.10,2.11,2.12,2.13,2.14,2.15 tier cache
Checking storage requirements...done
Adding disk 2.9 to the cache tier...done

Updating system information...done

Disk 2.9 successfully added to the cache tier.

Checking storage requirements...done
Adding disk 2.10 to the cache tier...done

Updating system information...done

Disk 2.10 successfully added to the cache tier.

Checking storage requirements...done
Adding disk 2.11 to the cache tier...done

Updating system information...done

Disk 2.11 successfully added to the cache tier.

Checking storage requirements...done
Adding disk 2.12 to the cache tier...done

Updating system information...done

Disk 2.12 successfully added to the cache tier.

Checking storage requirements...done
```

```
Adding disk 2.13 to the cache tier...done

Updating system information...done

Disk 2.13 successfully added to the cache tier.

Checking storage requirements...done
Adding disk 2.14 to the cache tier...done

Updating system information...done

Disk 2.14 successfully added to the cache tier.

Checking storage requirements...done
Adding disk 2.15 to the cache tier...done

Updating system information...done

Disk 2.15 successfully added to the cache tier.
```

Install and connect the new storage

Verify a license exists for the new capacity before attempting to add it to the system.

Complete the following tasks to add new storage capacity to the system.

Install the new disk shelves in the rack

NOTE: This task does not apply when adding a new disk pack to an existing DS60 shelf.

Complete the steps in Install the Disk Shelves in the Rack on page 25 to install a new disk shelf in the rack.

Cabling diagrams

Connect Cables and Power On on page 53 provides cabling diagrams, and instructions.

Power cycle DS60 shelves

About this task

To make sure that the shelf firmware is updated properly, power cycle DS60 shelves after installing them. Complete the following tasks to power cycle the shelves.

NOTE: The KB article *Data Domain Restorers with DS60 shelves may encounter a kernel panic due to an LCC firmware change*, available on https://support.emc.com, provides additional information.

Steps

1. Run the `system poweroff` command to shutdown the Data Domain system.
2. Remove all AC power cords from all DS60 shelves for 30 seconds.
3. Reconnect the AC power cords to the DS60 shelves and wait five minutes for the shelves to power up and stabilize.
4. Power on the Data Domain system
5. Log back in as a sysadmin user.

Add a new disk pack to an existing DS60

If necessary, complete the following tasks to add a new disk pack to an existing DS60 shelf. It is not necessary to remove power from the disk shelf before adding new disks.

Locate the target enclosure in the rack

About this task

Illuminate the LED beacon to identify the physical location of the target enclosure.

Steps

Illuminate the LED beacon on the target enclosure.

Run the following command: `enclosure beacon 2`

Identify the first empty disk pack in the target enclosure

About this task

The DS60 contains four disk packs. Each disk pack is a 15 disk grouping, three disks wide by five disks deep. Identify the disk pack where the new disks will be installed.

Steps

Display the enclosures and disks installed on the system.

NOTE: In the output below, row A is located at the front of the chassis. The DS60 has color coded markings on the front and rear lips of the disk bay to identify each disk pack.

Run the following command: `disk show state`

The drive slot/locations are marked on the chassis 0-59, but the OS software still references the slots as 1-60. It is important to identify the proper drive between the location called out in the FRU, and the location as specified in the software.

```
# disk show state
Enclosure        Disk
  Row(disk-id)    1  2  3  4  5  6  7  8  9  10 11 12 13 14 15
--------------   ---------------------------------------------
1                 .  .  .  .
2                |--------|--------|--------|--------|
                 | Pack 1 | Pack 2 | Pack 3 | Pack 4 |
     E(49-60)    |.  .  s |-  -  - |-  -  - |-  -  - |
     D(37-48)    |.  .  . |-  -  - |-  -  - |-  -  - |
     C(25-36)    |.  .  . |-  -  - |-  -  - |-  -  - |
     B(13-24)    |.  .  . |-  -  - |-  -  - |-  -  - |
     A( 1-12)    |.  .  . |-  -  - |-  -  - |-  -  - |
                 |--------|--------|--------|--------|
--------------   ---------------------------------------------

Legend   State                Count
------   -------------------  -----
.        In Use Disks         18
s        Spare Disks          1
U        Unknown Disks        0
-        Not Installed Disks  45
------   -------------------  -----
Total 19 disks
```

In this example, the new disks will be installed in enclosure 2, pack 2.

Opening the console

About this task

The console is a protruding plastic banner on the front of the cabinet with a stripe of blue or green light and the product badge.

If the console is covering the front of the shelf to which you need access, open the console using the steps that follow.

Steps

1. Grasp the right side of the console.
2. Pull the console to swing it open.

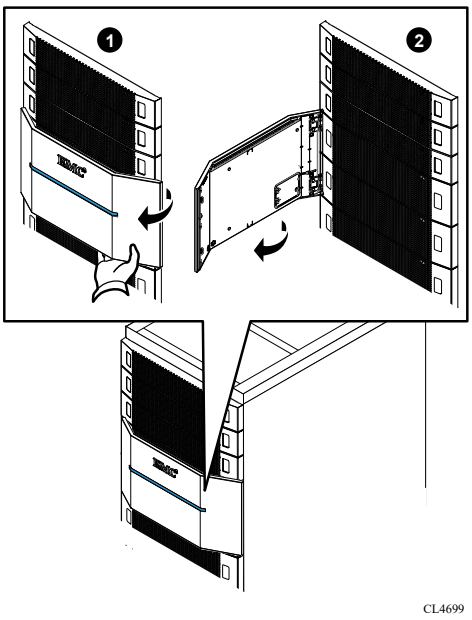

Figure 77. Opening the console

Removing the front bezel

About this task

NOTE: You must remove the front bezel to gain access to the internal components. Remove it only to replace or add an internal component.

Steps

1. If the bezel has a lock, insert the key that shipped with your shelf into the lock, and turn the key to unlock the bezel.
2. Press the two latch buttons on the bezel surface to release the bezel from the cabinet.
3. Pull the bezel off the cabinet and put it on a clean, static-free surface.

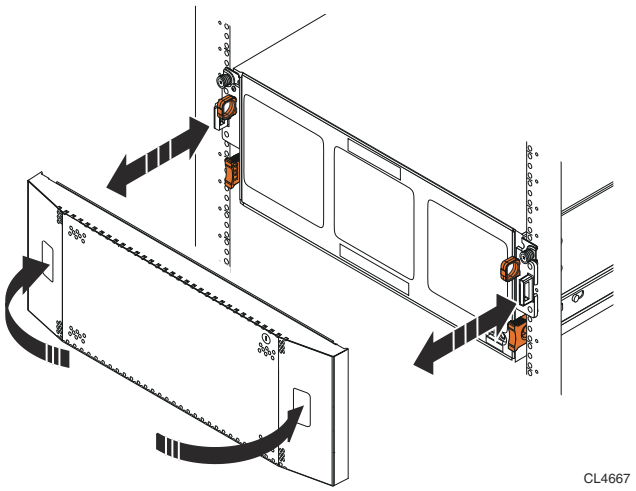

Figure 78. Removing the front bezel

Pulling the shelf chassis out

NOTE: Do not extend more than one shelf at a time. Extending more than one shelf at a time can cause the rack to tip over, which will damage the equipment and may injure personnel.

About this task

To access the internal components, you must release and pull the shelf out of the cabinet. The shelf slides out of the cabinet far enough for you to access its internal components and then locks on the rails in the service position so that you cannot pull it out any farther. The chassis is freed from the cabinet by removing captive shoulder screws which attach the chassis to the cabinet.

Steps

1. Unscrew the attaching screws from the NEMA channel.
2. Unscrew the shoulder-screws until they are free from the cabinet. Using the orange shelf latch handles, pull the slowly pull shelf completely out the cabinet.

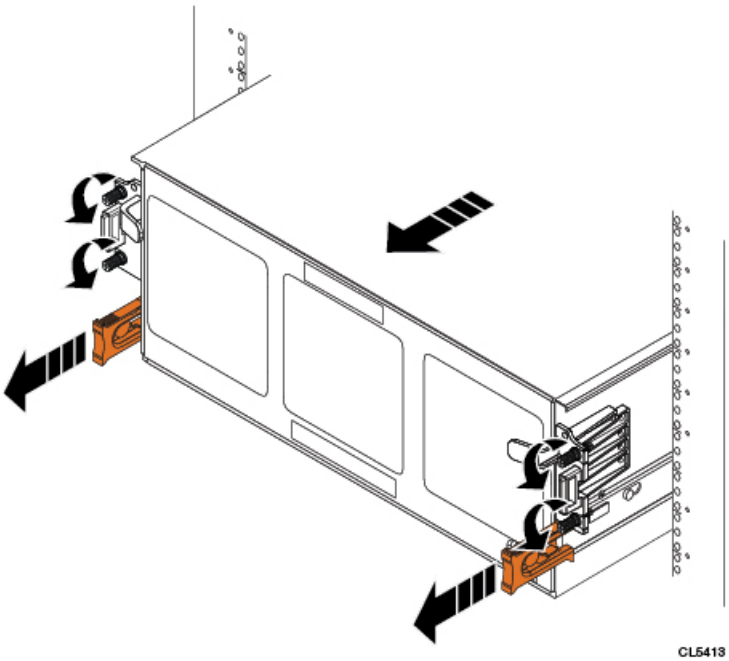

Figure 79. Pulling the Chassis Out (Two shoulder Screw Configuration)

Add new disks

About this task

It is not necessary to remove power from the disk shelf before adding new disks.

Steps

1. Grab the finger slot of a blank carrier and pull it straight up to remove it from the disk slot.

   NOTE: After removing a blank carrier, insert the disk into the empty slot before removing the next carrier. Do not attempt to remove all the carriers before installing the disks.

   CAUTION: Install the disk drives within 10 minutes after the shelf is slid out of the rack. If it is not returned to the rack within 10 minutes, all drives may be powered down to avoid overheating the node.

2. Attach and ESD wristband to your wrist and the shelf in which you are installing the disk
3. Open the disk carrier latch all the way.
4. **CAUTION: Do not drop the disk drive into the slot. Dropping the disk drive may damage the disk drive and the drive interface backplane. A full chassis replacement is required if this occurs.**

   Align the disk with the guides and gently lower the disk into the slot (1).
   The latch begins to rotate downward when its tabs meet the shelf.
5. If the drive installation becomes difficult:
   a. Seat the drive as far as possible until a hard stop is reached.
   b. Push drive horizontally toward the back of the chassis while holding the silver drive handle upright (at a 90 degree angle).
   c. The drive should release from the hard stop, and seating the drive can continue.
6. Push on the latch tab to engage the latch (2).
7. When the latch is engaged, push firmly on the module to verify that the disk is properly seated (3).

   The disk's Active light flashes to reflect the disk's spin-up sequence.

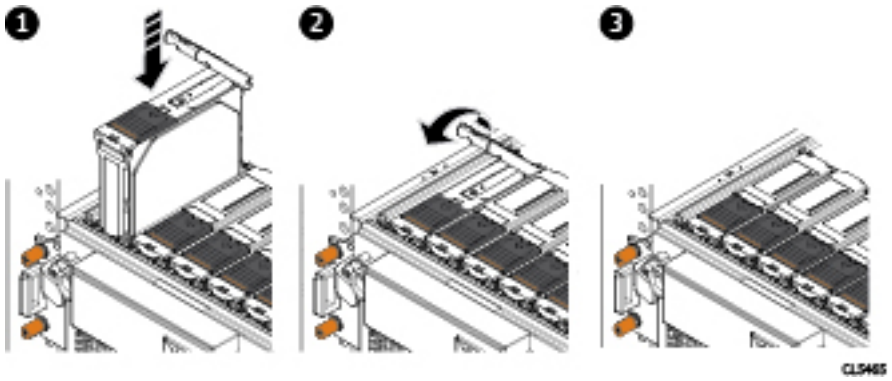

Figure 80. Installing a disk

8. Repeat steps 1-7 to add the remaining 14 disks.

Close the shelf chassis

About this task

After installing all 15 new disks, close the DS60 chassis.

Steps

1. Using the orange shelf latch handles, push the shelf slowly into the cabinet. Be aware of SAS and Power cabling as the shelf is reseated.
2. Screw the shoulder-screws in until they are seated.

3. Screw the attaching screws to the NEMA channel.

Verify and configure the new disks

About this task

Complete the following tasks to verify and configure the new disks.

Steps

1. Run the `filesys enable` to command to reenable the file system.
2. Run the `enclosure show summary` command to verify the Data Domain system recognizes the new disk shelf.

   NOTE: This step is not required when adding a new disk pack to an existing DS60.

   - For a new DS60:

```
# enclosure show summary
Enclosure Model No. Serial No.      State  OEM Name OEM Value Capacity
--------- --------- --------------- ------ -------- --------- --------
1         DD####    <Serial#>    Online                   4 Slots
2         DS60      <Serial#>    Online                  60 Slots
3         DS60      <Serial#>    Online                  60 Slots
--------- --------- --------------- ------ -------- --------- --------
3 enclosures present.
```

   - For a new ES30:

```
# enclosure show summary
Enclosure Model No. Serial No.      State  OEM Name OEM Value Capacity
--------- --------- --------------- ------ -------- --------- --------
1         DD####    <Serial#>    Online                   4 Slots
2         ES30      <Serial#>    Online                  15 Slots
3         ES30      <Serial#>    Online                  15 Slots
--------- --------- --------------- ------ -------- --------- --------
3 enclosures present.
```

3. Run the `enclosure show topology` command to verify there are two valid SAS paths to the new storage.

   NOTE: This step is not required when adding a new disk pack to an existing DS60.

   NOTE: Optionally run the `enclosure test topology` command to test each SAS path.

4. Run the `disk show state` command to verify the system can see all the disks in the new enclosure. All the new disks should display in the `Unknown` state.

   - For a new disk pack in an existing DS60:

```
# disk show state
Enclosure          Disk
  Row(disk-id)      1  2  3  4  5  6  7  8  9  10 11 12 13 14 15
--------------    ---------------------------------------------
1                  .  .  .  .
2                 |--------|--------|--------|--------|
                  | Pack 1 | Pack 2 | Pack 3 | Pack 4 |
     E(49-60)     |.  .  s |U  U  U |-  -  - |-  -  - |
     D(37-48)     |.  .  . |U  U  U |-  -  - |-  -  - |
     C(25-36)     |.  .  . |U  U  U |-  -  - |-  -  - |
     B(13-24)     |.  .  . |U  U  U |-  -  - |-  -  - |
     A( 1-12)     |.  .  . |U  U  U |-  -  - |-  -  - |
                  |--------|--------|--------|--------|
--------------    ---------------------------------------------

Legend   State                Count
------   -------------------  -----
.        In Use Disks         18
s        Spare Disks          1
U        Unknown Disks        15
```

```
-        Not Installed Disks   30
------   -------------------   -----
Total 34 disks
```

- For a new DS60:

```
# disk show state
Enclosure        Disk
  Row(disk-id)    1  2  3  4  5  6  7  8  9  10 11 12 13 14 15
--------------   ---------------------------------------------
1                 .  .  .  .
2                |--------|--------|--------|--------|
                 | Pack 1 | Pack 2 | Pack 3 | Pack 4 |
     E(49-60)    |.  .  . |.  .  . |.  .  . |.  .  . |
     D(37-48)    |.  .  . |.  .  . |.  .  . |.  .  . |
     C(25-36)    |.  .  . |.  .  . |.  .  . |.  .  . |
     B(13-24)    |.  .  . |.  .  . |.  .  . |.  .  . |
     A( 1-12)    |.  .  s |.  .  s |.  .  s |.  .  s |
                 |--------|--------|--------|--------|
3                |--------|--------|--------|--------|
                 | Pack 1 | Pack 2 | Pack 3 | Pack 4 |
     E(49-60)    |U  U  U |-  -  - |-  -  - |-  -  - |
     D(37-48)    |U  U  U |-  -  - |-  -  - |-  -  - |
     C(25-36)    |U  U  U |-  -  - |-  -  - |-  -  - |
     B(13-24)    |U  U  U |-  -  - |-  -  - |-  -  - |
     A( 1-12)    |U  U  U |-  -  - |-  -  - |-  -  - |
                 |--------|--------|--------|--------|
--------------   ---------------------------------------------

Legend   State                 Count
------   -------------------   -----
.        In Use Disks          60
U        Unknown Disks         15
s        Spare Disks           4
-        Not Installed Disks   45
------   -------------------   -----
Total 79 disks
```

- For a new ES30:

```
# disk show state
Enclosure Disk
          1 2 3 4 5 6 7 8 9 10 11 12 13 14 15 16
--------- ------------------------------------------------
1         s . . .
2         . . . . . . . . . . . . . . . . s
3         U U U U U U U U U U U U U U U U
--------- ------------------------------------------------
Legend State           Count
------ --------------- -----
.      In Use Disks    17
s      Spare Disks     2
U      Unknown Disks   15
------ --------------- -----
Total 34 disks
```

5. Run the **storage add tier *<storage-tier>* enclosure *<enclosure-number>*** command to add the new enclosure to the Data Domain system volume. The command prompts for confirmation, and requires the sysadmin password to complete. Run the command once for each enclosure being added.
   - To add a new disk pack (DS60) to Active Tier storage:

```
# storage add tier active enclosure 2:2
Checking storage requirements...done

Adding enclosure 2:2 to the active tier...Enclosure 2:2 successfully added to the
active tier.

Updating system information...done

Successfully added: 2:2 done
```

   - To add a new disk pack (DS60) to Archive Tier storage:

```
# storage add tier archive enclosure 2:2
Checking storage requirements...done
```

```
Adding enclosure 2:2 to the archive tier...Enclosure 2:2 successfully added to the
archive tier.

Updating system information...done

Successfully added: 2:2 done
```

- To add a new disk pack (DS60) to Cloud Tier storage:

```
# storage add tier cloud enclosure 2:2
Checking storage requirements...done

Adding enclosure 2:2 to the cloud tier...Enclosure 2:2 successfully added to the
cloud tier.

Updating system information...done

Successfully added: 2:2 done
```

- To add a new shelf to Active Tier storage:

```
# storage add tier active enclosure 3
Checking storage requirements...done

Adding enclosure 3 to the active tier...Enclosure 3 successfully added to the
active tier.

Updating system information...done

Successfully added: 3 done
```

- To add a new shelf to Archive Tier storage:

```
# storage add tier archive enclosure 3
Checking storage requirements...done

Adding enclosure 3 to the archive tier...Enclosure 3 successfully added to the
archive tier.

Updating system information...done

Successfully added: 3 done
```

- To add a new shelf to Cloud Tier storage:

```
# storage add tier cloud enclosure 3
Checking storage requirements...done

Adding enclosure 3 to the cloud tier...Enclosure 3 successfully added to the
cloud tier.

Updating system information...done

Successfully added: 3 done
```

6. Run the `disk show state` command to verify the system can see all the disks in the new enclosure. All the new disks should display in the `Available` state.
   - For a new disk pack in an existing DS60:

```
# disk show state
Enclosure        Disk
  Row(disk-id)    1  2  3  4  5  6  7  8  9  10 11 12 13 14 15
--------------   ---------------------------------------------
1                 .  .  .  .
2                |--------|--------|--------|--------|
                 | Pack 1 | Pack 2 | Pack 3 | Pack 4 |
     E(49-60)    |.  .  s |v  v  v |-  -  - |-  -  - |
     D(37-48)    |.  .  . |v  v  v |-  -  - |-  -  - |
     C(25-36)    |.  .  . |v  v  v |-  -  - |-  -  - |
     B(13-24)    |.  .  . |v  v  v |-  -  - |-  -  - |
     A( 1-12)    |.  .  . |v  v  v |-  -  - |-  -  - |
                 |--------|--------|--------|--------|
--------------   ---------------------------------------------
```

```
Legend   State                  Count
------   -------------------    -----
.        In Use Disks           18
s        Spare Disks            1
v        Available Disks        15
-        Not Installed Disks    30
------   -------------------    -----
Total 34 disks
```

- For a new DS60:

```
# disk show state
Enclosure         Disk
  Row(disk-id)     1  2  3  4  5  6  7  8  9  10 11 12 13 14 15
--------------    ---------------------------------------------
1                  .  .  .  .
2                 |--------|--------|--------|--------|
                  | Pack 1 | Pack 2 | Pack 3 | Pack 4 |
     E(49-60)     |.  .  . |.  .  . |.  .  . |.  .  . |
     D(37-48)     |.  .  . |.  .  . |.  .  . |.  .  . |
     C(25-36)     |.  .  . |.  .  . |.  .  . |.  .  . |
     B(13-24)     |.  .  . |.  .  . |.  .  . |.  .  . |
     A( 1-12)     |.  .  s |.  .  s |.  .  s |.  .  s |
                  |--------|--------|--------|--------|
3                 |--------|--------|--------|--------|
                  | Pack 1 | Pack 2 | Pack 3 | Pack 4 |
     E(49-60)     |v  v  v |-  -  - |-  -  - |-  -  - |
     D(37-48)     |v  v  v |-  -  - |-  -  - |-  -  - |
     C(25-36)     |v  v  v |-  -  - |-  -  - |-  -  - |
     B(13-24)     |v  v  v |-  -  - |-  -  - |-  -  - |
     A( 1-12)     |v  v  v |-  -  - |-  -  - |-  -  - |
                  |--------|--------|--------|--------|
--------------    ---------------------------------------------

Legend   State                  Count
------   -------------------    -----
.        In Use Disks           60
v        Available Disks        15
s        Spare Disks            4
-        Not Installed Disks    45
------   -------------------    -----
Total 79 disks
```

- For a new ES30:

```
# disk show state
Enclosure Disk
          1 2 3 4 5 6 7 8 9 10 11 12 13 14 15 16
--------- ------------------------------------------------
1         s . . .
2         . . . . . . . . . . . . . . . . s
3         v v v v v v v v v v v v v v v v
--------- ------------------------------------------------
Legend State           Count
------ --------------- -----
.      In Use Disks    17
s      Spare Disks     2
v      Available Disks 15
------ --------------- -----
Total 34 disks
```

License the new storage with electronic licensing

Prerequisites

Electronic licensing requires the node Locking ID (system serial number) and the LAC letter code provided as part of the sales order are required to obtain the electronic license file.

About this task

Use electronic licensing to add Active Tier, Archive Tier, or Cloud Tier storage on DD OS versions 6.0 and higher.

Steps

Run the `elicense update` command to add the electronic license file to the system.

- Specify the **<license-file>** parameter when the command is run to allow it to proceed without prompting.

```
# elicense update electronic-license-file.txt
```

- Run the command without parameters to run the command interactively.

```
# elicense update
Enter the content of license file and then press Control-D, or press Control-C to
cancel.
```

Expand the file system

Prerequisites

The new storage must be added to the file system before it can be used.

About this task

Complete the following tasks to add the new storage to the file system.

Steps

1. Add the storage to the file system.

   NOTE: Adding Cloud Tier storage does not require expanding the Data Domain file system.

   - Run the **filesys expand** command to add Active Tier storage.

     ```
     # filesys expand
     ```

   - Run the **filesys archive unit expand *<archive-unit-number>*** command to add Archive Tier storage.

     ```
     # filesys archive unit expand 1
     ```

2. Run the `filesys show space` command to verify the system recognizes the additional capacity.

```
# filesys show space
Active Tier:
Resource          Size GiB  Used GiB Avail GiB  Use% Cleanable GiB
----------------- --------- -------- ---------- ---- -------------
/data: pre-comp          -      0.0          -    -             -
/data: post-comp  160187.0      0.2   160186.8   0%           0.0
/ddvar               308.1      2.8      289.7   1%             -
----------------- --------- -------- ---------- ----- -------------
```

3. Run the `disk show state` command to verify the system displays a status of `In Use` or `Spare` for the new disks.

   - For a new disk pack in an existing DS60:

```
# disk show state
Enclosure         Disk
  Row(disk-id)     1  2  3  4  5  6  7  8  9  10 11 12 13 14 15
--------------    -----------------------------------------------
1                  .  .  .  .
2                 |--------|--------|--------|--------|
                  | Pack 1 | Pack 2 | Pack 3 | Pack 4 |
     E(49-60)     |.  .  s |.  .  s |-  -  - |-  -  - |
     D(37-48)     |.  .  . |.  .  . |-  -  - |-  -  - |
     C(25-36)     |.  .  . |.  .  . |-  -  - |-  -  - |
     B(13-24)     |.  .  . |.  .  . |-  -  - |-  -  - |
     A( 1-12)     |.  .  . |.  .  . |-  -  - |-  -  - |
```

```
                 |--------|--------|--------|--------|
--------------   ------------------------------------------

Legend   State                 Count
------   -------------------   -----
.        In Use Disks          32
s        Spare Disks           2
-        Not Installed Disks   30
------   -------------------   -----
Total 34 disks
```

- For a new DS60:

```
# disk show state
Enclosure        Disk
  Row(disk-id)    1  2  3  4  5  6  7  8  9  10 11 12 13 14 15
--------------   ----------------------------------------------
1                 .  .  .  .
2                |--------|--------|--------|--------|
                 | Pack 1 | Pack 2 | Pack 3 | Pack 4 |
     E(49-60)    |.  .  . |.  .  . |.  .  . |.  .  . |
     D(37-48)    |.  .  . |.  .  . |.  .  . |.  .  . |
     C(25-36)    |.  .  . |.  .  . |.  .  . |.  .  . |
     B(13-24)    |.  .  . |.  .  . |.  .  . |.  .  . |
     A( 1-12)    |.  .  s |.  .  s |.  .  s |.  .  s |
                 |--------|--------|--------|--------|
3                |--------|--------|--------|--------|
                 | Pack 1 | Pack 2 | Pack 3 | Pack 4 |
     E(49-60)    |.  .  . |-  -  - |-  -  - |-  -  - |
     D(37-48)    |.  .  . |-  -  - |-  -  - |-  -  - |
     C(25-36)    |.  .  . |-  -  - |-  -  - |-  -  - |
     B(13-24)    |.  .  . |-  -  - |-  -  - |-  -  - |
     A( 1-12)    |.  .  s |-  -  - |-  -  - |-  -  - |
                 |--------|--------|--------|--------|
--------------   ----------------------------------------------

Legend   State                 Count
------   -------------------   -----
.        In Use Disks          74
s        Spare Disks           5
-        Not Installed Disks   45
------   -------------------   -----
Total 79 disks
```

- For a new ES30:

```
# disk show state
Enclosure Disk
          1 2 3 4 5 6 7 8 9 10 11 12 13 14 15 16
--------- ------------------------------------------------
1         s . . .
2         . . . . . . . . . . . . . . . . s
3         . . . . . . . . . . . . . . . . s
--------- ------------------------------------------------
Legend State           Count
------ --------------- -----
.      In Use Disks    31
s      Spare Disks     3
------ --------------- -----
Total 34 disks
```

4. Display the current alerts on the system.

   Run the following command: `alerts show current`

```
# alerts show current
No active alerts.
```

5. Resolve all displayed alerts.