

User Manual for the
Eaton RE Series Server Enclosure

Table of Contents

Section		Page
1.	Overview …….....	2
2.	Component Identification…….....	3
3.	Packaging…….....	4
4.	Assembly …….....	5
5.	Configuration…….....	10

Section 1. Overview

This document outlines the recommended practices for assembling and installing the RE Series server enclosure. The standard server enclosure is a high-quality design for storage of industry-standard (EIA/ECA-310), 19" rack-mount hardware, which includes servers, voice, data, networking, power protection equipment, KVM, etc., which are used in the data center rooms. 19" Standing Server Rack is the ultimate solution designed and engineered for demanding data center environments. To achieve optimum versatility within the server rack, users can set multiple depths throughout the rack by adjustable 19" mounting rails mounted on heavy duty side supports. Horizontally divided side panels provide ease of access and convenient post-installation maintenance. Over 78% perforations on front and rear door enable optimum airflow within the rack. Flat-pack option enables savings up to 60% in the transport cost and warehouse space. Please follow the installation instructions closely; assembly should be performed using the recommended tools.

Premier Model	Essential Model	Height (RMU)	Height [H] (mm)	Width [W] (mm)	Depth [D] (mm)
REV27610PB	REV27610EB	27	1330	600	1070
REV42610PB	REV42610EB	42	1992	600	1070
REV42612PB	REV42612EB	42	1992	600	1170
REV42810PB	REV42810EB	42	1992	800	1070
REV42812PB	REV42812EB	42	1992	800	1170
REV48610PB	REV48610EB	48	2259	600	1070
REV48612PB	REV48612EB	48	2259	600	1170
REV48810PB	REV48810EB	48	2259	800	1070
REV48812PB	REV48812EB	48	2259	800	1170

NOTE: Above products can be shipped fully assembled or flat-packed.

Caution:

Before installing this product, please note the following safety information:
1. Always lower the leveling feet of the enclosure.
2. Always install equipment starting from the bottom of the enclosure to the top.
3. Always install the heaviest equipment in the bottom of the enclosure.
4. Always have at least two persons during assembling of the enclosure.

Section 2. Component Identification

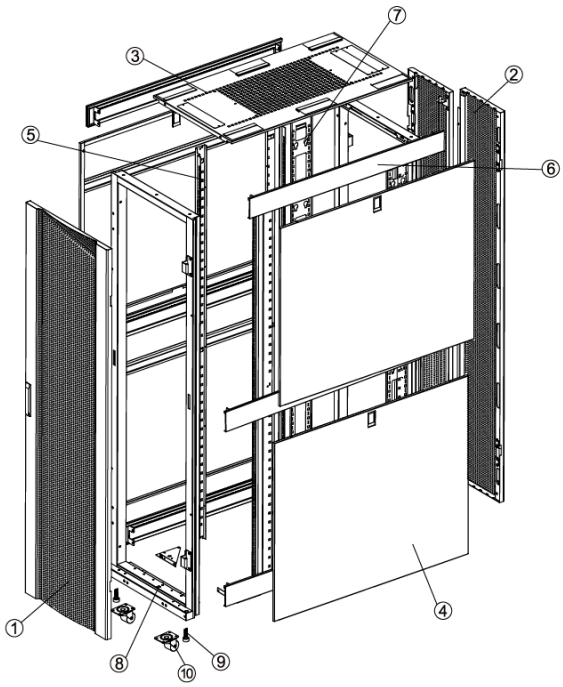

Item	Component	Quantity
1	Front vented door with lock	1
2	Rear door	2
3	Top cover	1
4	Side panel	4
5	Vertical rail	4
6	Horizontal beam	6
7	Cable management rail	2
8	Door frame	2
9	Leveling feet	4
10	2” heavy duty castor	4

Important: Bottom Plate Installation Instruction (Optional)
It is better to install the optional bottom plate during steps 4 and step 5. Secure the bottom plate to the corner bracket with M4*8mm self-tapping screws (4pcs), the bottom plate is tightened to the enclosure with M8*25mm hexagon headed bolt.

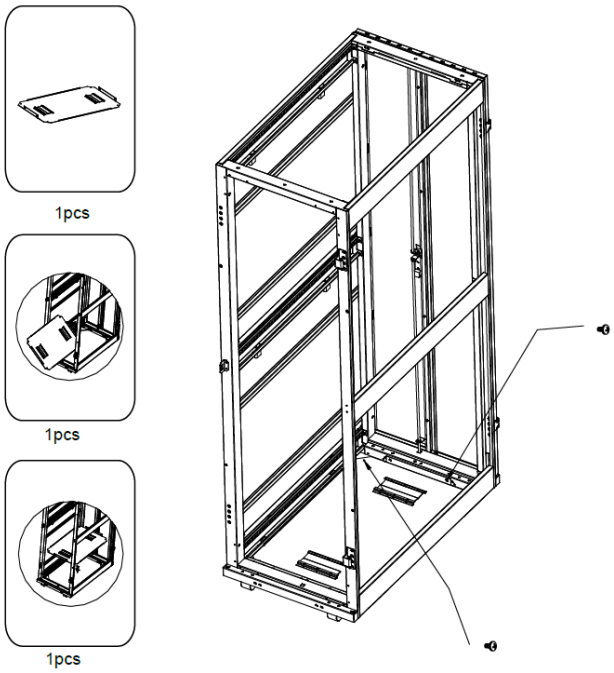

Note: Refer to the mounting instructions before installing your bottom plate.

Section 3. Packaging

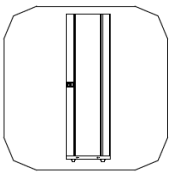

①

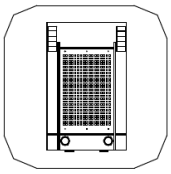

②

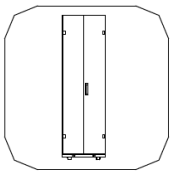

③

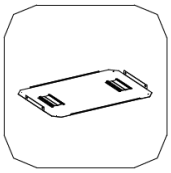

④

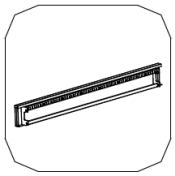

⑤

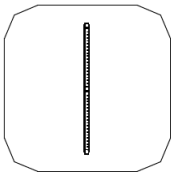

⑥

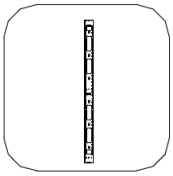

⑦

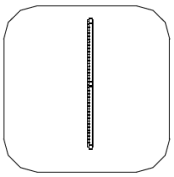

⑧

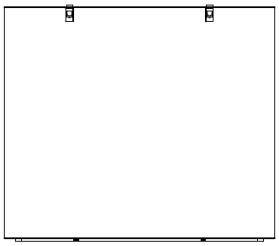

⑨

The flat-pack concept allows shipped enclosures to reduce space, which can save container and transportation costs.

CARTON A -19" FRONT & REAR DOOR KITS

Carton A	Parts List	Quantity
(1)	Front door assy	1
(2)	Top cover	1
(3)	Rear doory assy	1
(4)	Bottom plate	1

CARTON B-19" RAILS & BEAM KITS

Carton B	Parts List	Quantity
(5)	Horizontal beam	1
(6)	Vertical rail, left	1
(7)	Cable mgmt. rail	1
(8)	Vertical rail, right	1

CARTON C-19" SIDE PANELS KITS

Carton C	Parts List	Quantity
(9)	Side panel assy	1

Section 4. Assembly

Step 1: Connect corner brackets to the lower beams with 2 screws.

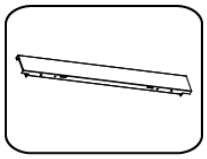

1pcs

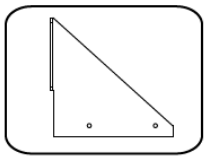

1pcs

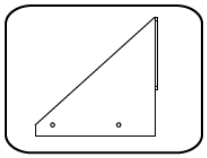

1pcs

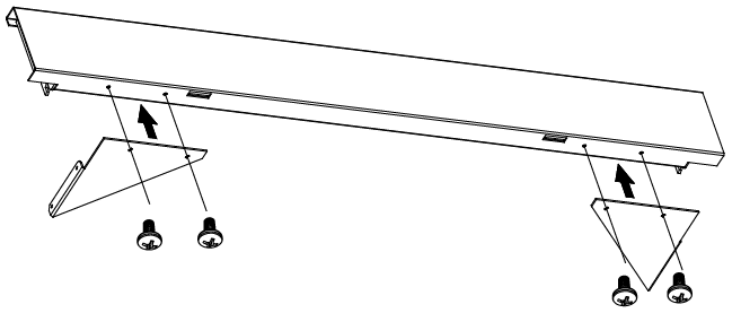

Step 2: Connect each of 6 beams to the rear door with 2 screws.

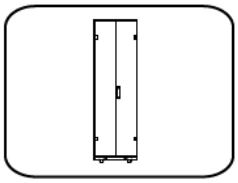

1pcs

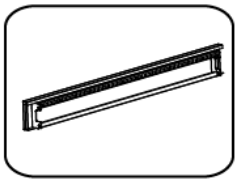

4pcs

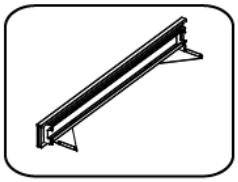

2pcs

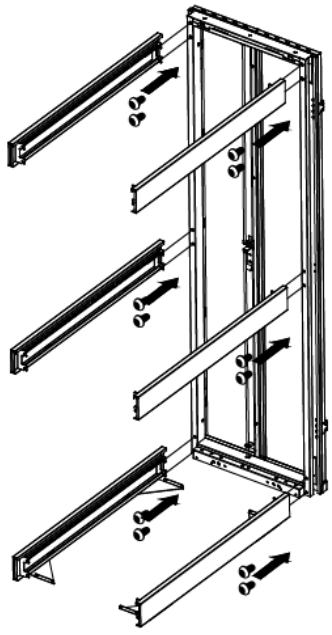

Step 3: Fasten each of 6 beams in Step 2 to the front door with 2 screws

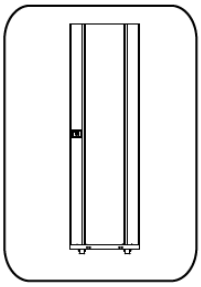

1pcs

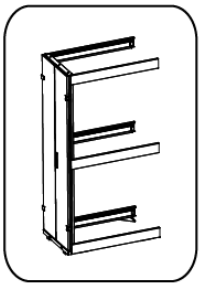

1pcs

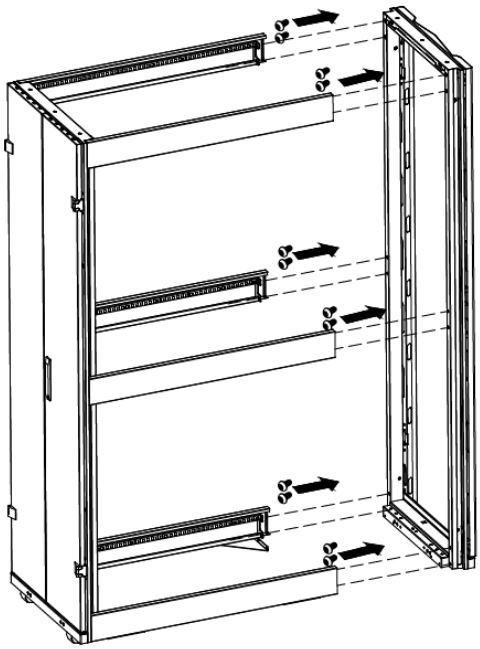

Step 4: Fasten corner brackets in Step1 to the front with 2 screws

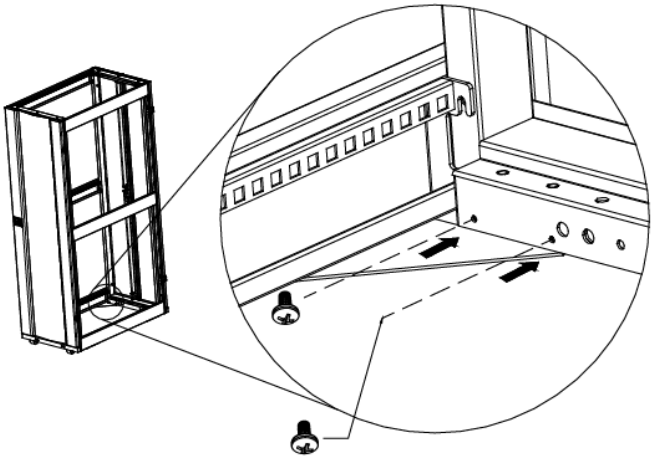

Step 5: Install the cage nuts to the required square openings in the mounting beams, one for each beam where you plan to install the cable management rails. Use M6 washers and mounting screws to secure the cable management rails, one for each side. Place M6 washers between the screws and the equipment mounting rails.

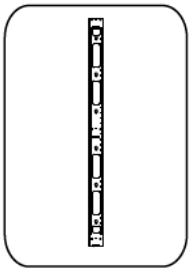

2pcs

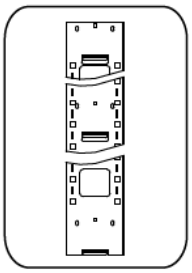

1pcs

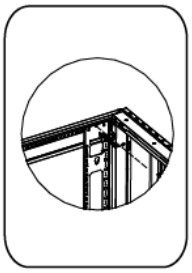

1pcs

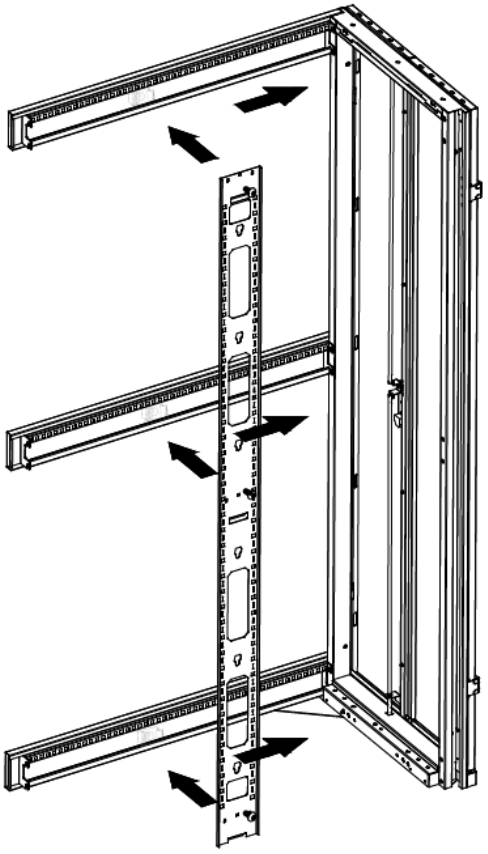

Step 6. Install the cage nuts to the desired square openings as step 5. Fasten the rails to the mounting beams with 3 screws and M6 washers, two rails for each side.

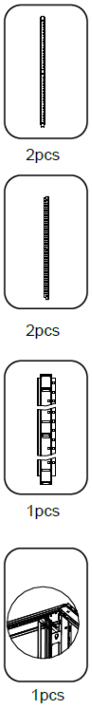

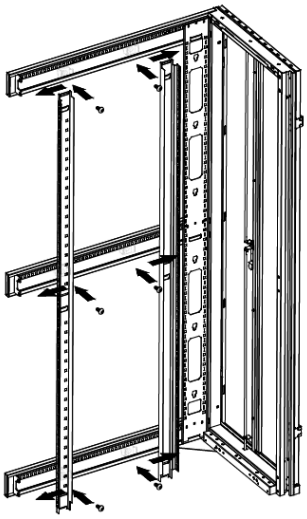

Step 7. While holding the top cover, arrange the 2 pins near the rear of the top cover into the holes in the enclosure frame. Pull the roof panel downward until it's close to the enclosure frame.



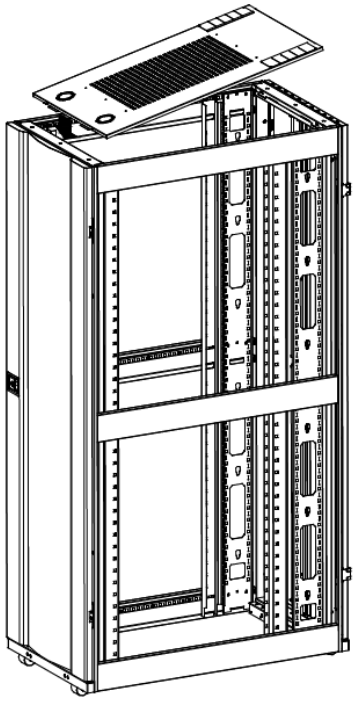

Step 8. Open side panel latch by sliding it downward, then install side panels into the frame.

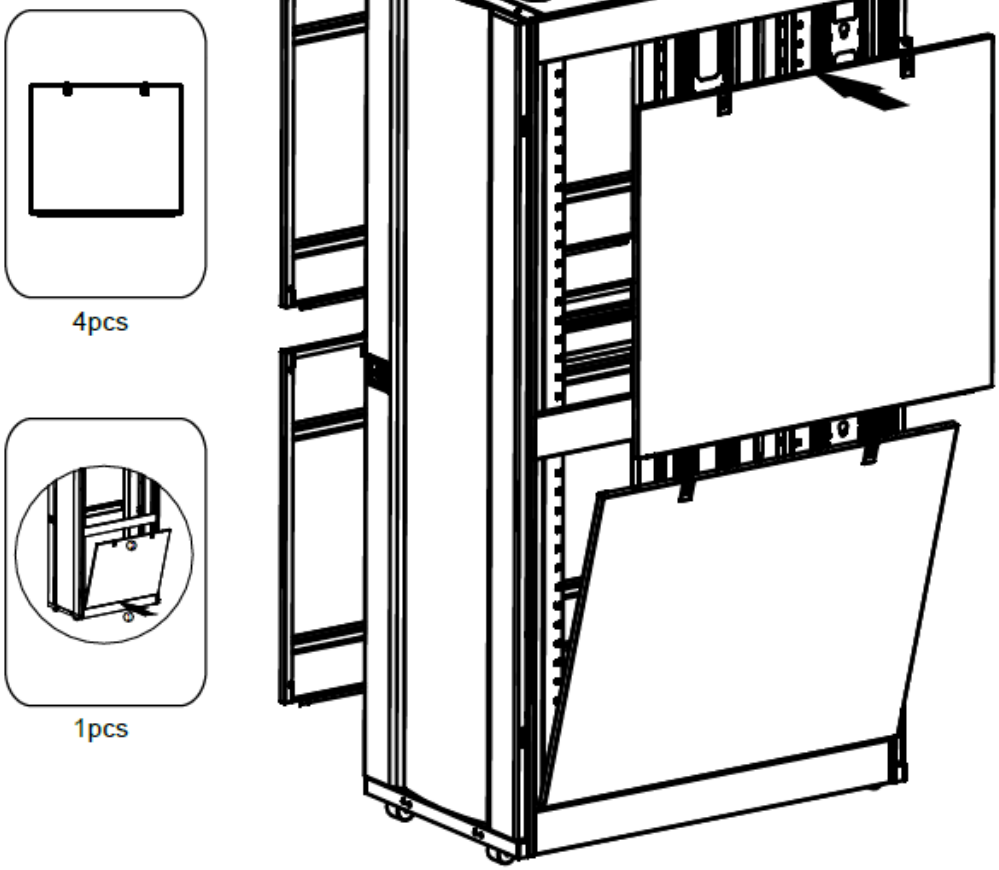

Section 5. Configuration

Step 1. Placement
Use the casters to move the enclosure for a short distance over a level, smooth and stable surface by pushing the unit.

Step 2. Leveling
After locating the enclosure in right place, use the leveling feet on 4 corners to level the unit on the floor. Make sure the enclosure is leveled before attempting to install equipment.

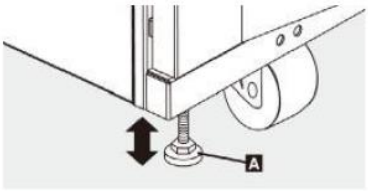

Step 3. Grounding Connection
Make sure all the parts of the enclosure are properly bonded and grounded to the frame of the enclosure, then connect one of the designated grounding locations (two M6 threaded inserts on front/rear door frame) directly to your facility's earth ground connection with 8AWG wire. Do not use the enclosure without a proper earth ground connection.

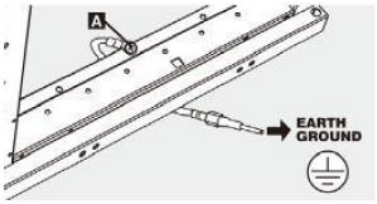

Step 4. Alignment
Align the enclosures and join them using one M5 flat-head screw (pre-installed on the door frame) per bracket-two brackets for the front and two brackets for the rear.

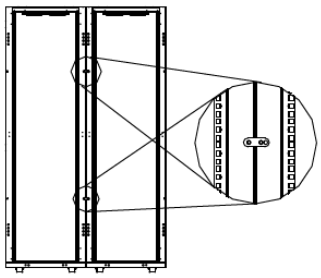

Step 5. Equipment installation
Do not install any equipment until you have stabilized the unit. Install the heavier equipment first and towards the bottom of enclosure.

Note: The square holes at the middle of each U-shaped vertical rail are numbered and also include a small notch to aid identification. When installing equipment, use cage nut to secure your equipment to the U-shaped vertical rail.