ThinkStation®

P330 Tiny Hardware Maintenance Manual

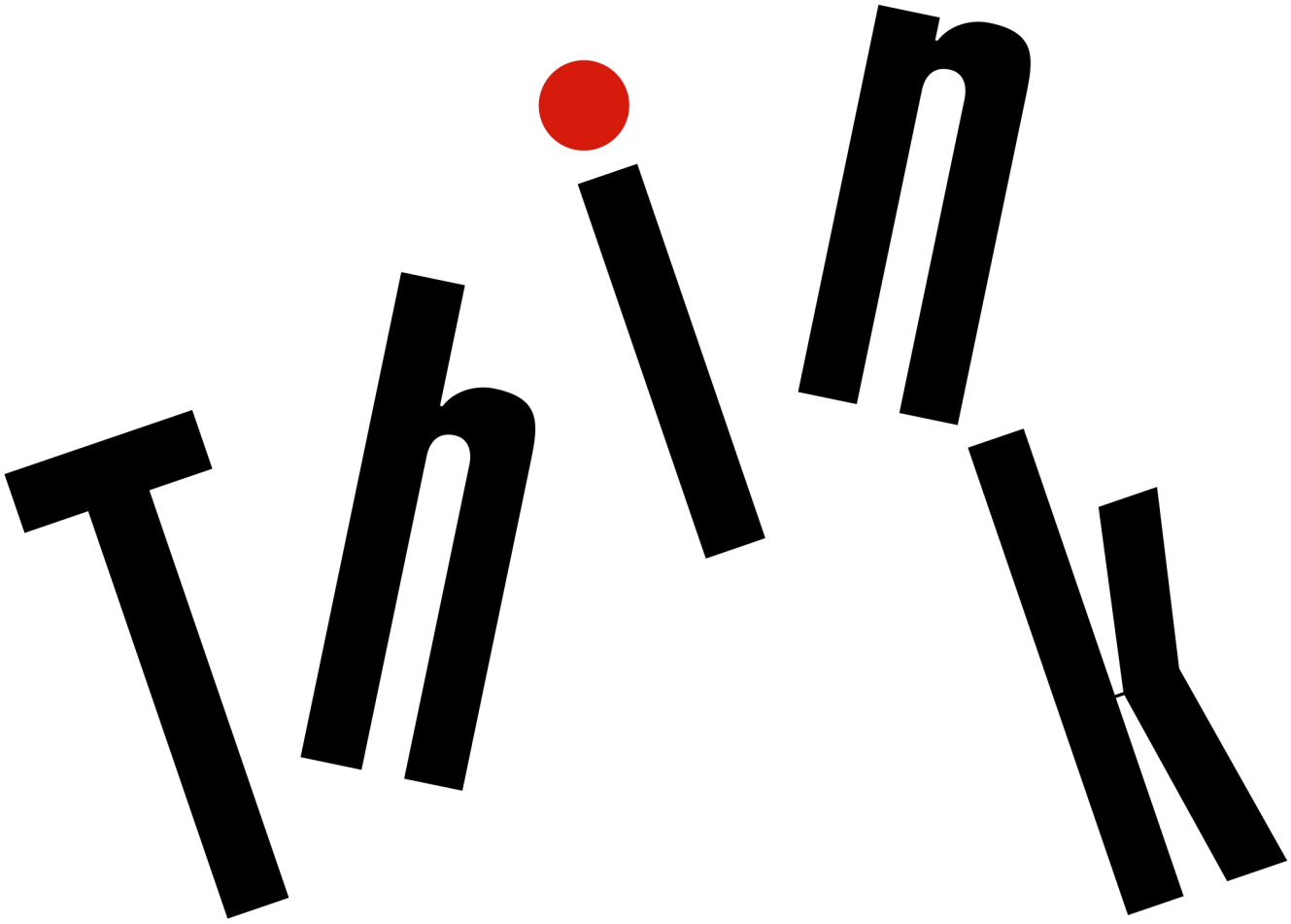

Lenovo

Machine Types: 30CE, 30CF, 30CG, 30D5, 30D6, and 30D7

Note: Before using this information and the product it supports, be sure to read and understand the Chapter 1 “Read this first: Important safety information” on page 1 and Appendix G “Notices” on page 155.

Third Edition (November 2019)

© Copyright Lenovo 2018, 2019.

LIMITED AND RESTRICTED RIGHTS NOTICE: If data or software is delivered pursuant to a General Services Administration “GSA” contract, use, reproduction, or disclosure is subject to restrictions set forth in Contract No. GS-35F-05925.

Contents

About this manual iii

Chapter 1. Read this first: Important safety information 1

Power cords and power adapters 1
General safety 1
Electrical safety 2
Safety inspection guide 3
Handling electrostatic discharge-sensitive devices 4
Grounding requirements 5
Safety notices (multi-lingual translations) 5

Chapter 2. Product overview 29

Hardware locations 29
Front view 29
Rear view 30
Parts on the system board 32
Machine type and model label 34
Major FRUs and CRUs 34
Computer features. 36
Computer specifications 39
Programs 39
Accessing a program on your computer . . . 39
An introduction to Lenovo programs 40

Chapter 3. Using your computer . . . 41

Registering your computer 41
Setting the computer volume 41
Using a disc 41
Guidelines about using the optical drive . . . 41
Handling and storing a disc 41
Playing and removing a disc 42
Recording a disc 42
Connecting to a network 43

Chapter 4. You and your computer . . 45

Arranging your workspace 45
Glare and lighting 45
Air circulation 45
Electrical outlet locations and cable lengths . . 45
Comfort 45
Accessibility information 46
Cleaning your computer 49
Maintenance 49
Basic maintenance tips 49
Good maintenance practices 49
Keeping your computer current 50
Moving your computer 50

Chapter 5. Security 51

Tips on using the computer 51
Attaching a Kensington-style cable lock . . . 51
Installing the computer into the TIO monitor . . 51
Viewing and changing security settings in the Setup Utility program 52
Using passwords and Windows accounts 52
Using the cover presence switch 52
Using firewalls 52
Protecting data against viruses 53
Using the Smart USB Protection function 53
Computrace Agent software embedded in firmware. 53
Trusted Platform Module (TPM). 53

Chapter 6. Advanced configuration. 55

Using the Setup Utility program 55
Starting the Setup Utility program 55
Changing the display language of the Setup Utility program 55
Enabling or disabling a device 55
Enabling or disabling the automatic power-on of your computer 56
Enabling or disabling the ErP LPS compliance mode 56
Switching between better acoustic and better thermal performance 56
Enabling or disabling the system to record thermal alert logs 57
Enabling or disabling the configuration change detection 57
Changing the BIOS settings before installing a new operating system 57
Using BIOS passwords 58
Selecting a startup device 59
Exiting the Setup Utility program 60
Updating and recovering the BIOS 60

Chapter 7. Troubleshooting, diagnostics, and recovery 63

Basic procedure for resolving computer problems 63
Troubleshooting 63
Startup problems 63
Audio problems 64

© Copyright Lenovo 2018, 2019

CD or DVD problems 65
Intermittent problems 66
Storage drive problems 66
Ethernet LAN problems 66
Wireless LAN problem 67
Bluetooth problems 68
Performance problems 68
Serial connector problem 69
USB device problems 70
Software and driver problems 70
Diagnosing problems 71
UEFI diagnostic program 71
Recovery information 72

Chapter 8. Service checkout and symptom-to-FRU index 73
Service checkout 73
Problem determination tips 73
Symptom-to-FRU index 74
Hard disk drive boot error 74
Power supply problems 75
Beep symptoms 75
POST error codes 76
Miscellaneous error conditions 77
Undetermined problems 79

Chapter 9. Hardware removal and installation 81
Handling static-sensitive devices 81
Customer Replaceable Units 81
Removing and installing hardware 82
Keyboard or wireless keyboard 82
Mouse or wireless mouse 83
Power adapter 88
Vertical stand 90
VESA mount bracket 92
External optical drive 92
Power adapter bracket 94
Computer cover 95
Storage drive 96
Internal speaker 100
Advanced speaker 101
Graphics card 101
System fan 106
Heat sink 107
Coin-cell battery 108
Microprocessor 110
Wi-Fi antennas 114
Antenna bracket 118
Wi-Fi card 119
Bottom cover 124
Memory module 124
M.2 storage drive 126
System board and chassis 128
Completing the parts replacement 131

Chapter 10. Getting information, help, and service 135
Information resources 135
Accessing the user guide in various languages 135
Windows help system 135
Safety and warranty 135
Lenovo Web site 135
Lenovo Support Web site 135
Help and service 136
Calling for service 136
Using other services 136
Purchasing additional services 137

Appendix A. System memory speed 139

Appendix B. Supplemental information about the Ubuntu operating system 141

Appendix C. Regulatory information 143

Appendix D. WEEE and recycling information of countries and regions 147

Appendix E. Restriction of Hazardous Substances (RoHS) Directive of countries and regions 151

Appendix F. ENERGY STAR model information 153

Appendix G. Notices 155

Appendix H. Trademarks 157

About this manual

This manual provides service and reference information for ThinkStation® computers listed on the front cover.

Use this manual along with the advanced diagnostic tests to troubleshoot problems.

Important: This manual is intended only for trained service technicians who are familiar with ThinkStation computers. Use this manual along with the advanced diagnostic tests to troubleshoot problems effectively. Before servicing a ThinkStation computer, be sure to read and understand Chapter 1 “Read this first: Important safety information” on page 1.

© Copyright Lenovo 2018, 2019

Chapter 1. Read this first: Important safety information

This chapter contains the safety information that you must be familiar with.

Power cords and power adapters

Use only the power cords and power adapters supplied by the product manufacturer. Do not use the ac power cord for other devices.

The power cords shall be safety approved. For Germany, it shall be H05VV-F, 3G, 0.75 mm^2, or better. For other countries, the suitable types shall be used accordingly.

Never wrap a power cord around a power adapter or other object. Doing so can stress the cord in ways that can cause the cord to fray, crack, or crimp. This can present a safety hazard.

Always route power cords so that they will not be walked on, tripped over, or pinched by objects.

Protect power cord and power adapters from liquids. For instance, do not leave your power cord or power adapter near sinks, tubs, toilets, or on floors that are cleaned with liquid cleansers. Liquids can cause a short circuit, particularly if the power cord or power adapter has been stressed by misuse. Liquids also can cause gradual corrosion of power cord terminals and/or the connector terminals on a power adapter, which can eventually result in overheating.

Ensure that all power cord connectors are securely and completely plugged into receptacles.

Do not use any power adapter that shows corrosion at the ac input pins or shows signs of overheating (such as deformed plastic) at the ac input or anywhere on the power adapter.

Do not use any power cords where the electrical contacts on either end show signs of corrosion or overheating or where the power cord appears to have been damaged in any way.

General safety

Follow these rules to ensure general safety:

- Observe good housekeeping in the area of the machines during and after maintenance.
- When lifting any heavy object:
  1. Ensure you can stand safely without slipping.
  2. Distribute the weight of the object equally between your feet.
  3. Use a slow lifting force. Never move suddenly or twist when you attempt to lift.
  4. Lift by standing or by pushing up with your leg muscles; this action removes the strain from the muscles in your back.

     Attention: Do not attempt to lift any objects that weigh more than 16 kg (35 lb) or objects that you think are too heavy for you.
- Do not perform any action that causes hazards to the customer, or that makes the equipment unsafe.
- Before you start the machine, ensure that other service representatives and the customer's personnel are not in a hazardous position.
- Place removed covers and other parts in a safe place, away from all personnel, while you are servicing the machine.

© Copyright Lenovo 2018, 2019

- Keep your tool case away from walk areas so that other people will not trip over it.
- Do not wear loose clothing that can be trapped in the moving parts of a machine. Ensure that your sleeves are fastened or rolled up above your elbows. If your hair is long, fasten it.
- Insert the ends of your necktie or scarf inside clothing or fasten it with a nonconductive clip, approximately 8 centimeters (3 inches) from the end.
- Do not wear jewelry, chains, metal-frame eyeglasses, or metal fasteners for your clothing.

  Remember: Metal objects are good electrical conductors.
- Wear safety glasses when you are: hammering, drilling, soldering, cutting wire, attaching springs, using solvents, or working in any other conditions that might be hazardous to your eyes.
- After service, reinstall all safety shields, guards, labels, and ground wires. Replace any safety device that is worn or defective.
- Reinstall all covers correctly before returning the machine to the customer.

CAUTION:



Keep fingers and other parts of your body away from hazardous, moving parts. If you suffer an injury, seek medical care immediately.

CAUTION:



Avoid contact with hot components inside the computer. During operation, some components become hot enough to burn the skin. Before you open the computer cover, turn off the computer, disconnect power, and wait approximately 10 minutes for the components to cool.

Electrical safety



CAUTION:
Electrical current from power, telephone, and communication cables can be hazardous. To avoid personal injury or equipment damage, disconnect the attached power cords, telecommunication systems, networks, and modems before you open the computer covers, unless instructed otherwise in the installation and configuration procedures.

Observe the following rules when working on electrical equipment.

Important: Use only approved tools and test equipment. Some hand tools have handles covered with a soft material that does not insulate you when working with live electrical currents. Many customers have, near their equipment, rubber floor mats that contain small conductive fibers to decrease electrostatic discharges. Do not use this type of mat to protect yourself from electrical shock.

- Find the room emergency power-off (EPO) switch, disconnecting switch, or electrical outlet. If an electrical accident occurs, you can then operate the switch or unplug the power cord quickly.
- Do not work alone under hazardous conditions or near equipment that has hazardous voltages.
- Disconnect all power before:
  - Performing a mechanical inspection
  - Working near power supplies
  - Removing or installing Field Replaceable Units (FRUs)

- Before you start to work on the machine, unplug the power cord. If you cannot unplug it, ask the customer to power-off the wall box that supplies power to the machine and to lock the wall box in the off position.
- If you need to work on a machine that has exposed electrical circuits, observe the following precautions:
  - Ensure that another person, familiar with the power-off controls, is near you.
    Remember: Another person must be there to switch off the power, if necessary.
  - Use only one hand when working with powered-on electrical equipment; keep the other hand in your pocket or behind your back.
    Remember: There must be a complete circuit to cause electrical shock. By observing the above rule, you may prevent a current from passing through your body.
  - When using a tester, set the controls correctly and use the approved probe leads and accessories for that tester.
  - Stand on suitable rubber mats (obtained locally, if necessary) to insulate you from grounds such as metal floor strips and machine frames.

  Observe the special safety precautions when you work with very high voltages; these instructions are in the safety sections of maintenance information. Use extreme care when measuring high voltages.
- Regularly inspect and maintain your electrical hand tools for safe operational condition.
- Do not use worn or broken tools and testers.
- *Never assume* that power has been disconnected from a circuit. First, *check* that it has been powered-off.
- Always look carefully for possible hazards in your work area. Examples of these hazards are moist floors, nongrounded power extension cables, power surges, and missing safety grounds.
- Do not touch live electrical circuits with the reflective surface of a plastic dental mirror. The surface is conductive; such touching can cause personal injury and machine damage.
- Do not service the following parts with the power on when they are removed from their normal operating places in a machine:
  - Power supply units
  - Pumps
  - Blowers and fans
  - Motor generators

  and similar units. (This practice ensures correct grounding of the units.)
- If an electrical accident occurs:
  - Use caution; do not become a victim yourself.
  - Switch off power.
  - Send another person to get medical aid.

Safety inspection guide

The intent of this inspection guide is to assist you in identifying potentially unsafe conditions on these products. Each machine, as it was designed and built, had required safety items installed to protect users and service personnel from injury. This guide addresses only those items. However, good judgment should be used to identify potential safety hazards due to attachment of features or options not covered by this inspection guide.

If any unsafe conditions are present, you must determine how serious the apparent hazard could be and whether you can continue without first correcting the problem.

Consider these conditions and the safety hazards they present:

- Electrical hazards, especially primary power (primary voltage on the frame can cause serious or fatal electrical shock).
- Explosive hazards, such as a damaged CRT face or bulging capacitor
- Mechanical hazards, such as loose or missing hardware

The guide consists of a series of steps presented in a checklist. Begin the checks with the power off, and the power cord disconnected.

Checklist:

1. Check exterior covers for damage (loose, broken, or sharp edges).
2. Power-off the computer. Disconnect the power cord.
3. Check the power cord for:
   a. A third-wire ground connector in good condition. Use a meter to measure third-wire ground continuity for 0.1 ohm or less between the external ground pin and frame ground.
   b. The power cord should be the appropriate type as specified in the parts listings.
   c. Insulation must not be frayed or worn.
4. Remove the cover.
5. Check for any obvious alterations. Use good judgment as to the safety of any alterations.
6. Check inside the unit for any obvious unsafe conditions, such as metal filings, contamination, water or other liquids, or signs of fire or smoke damage.
7. Check for worn, frayed, or pinched cables.
8. Check that the power-supply cover fasteners (screws or rivets) have not been removed or tampered with.

Handling electrostatic discharge-sensitive devices

Any computer part containing transistors or integrated circuits (ICs) should be considered sensitive to electrostatic discharge (ESD). ESD damage can occur when there is a difference in charge between objects. Protect against ESD damage by equalizing the charge so that the machine, the part, the work mat, and the person handling the part are all at the same charge.

Notes:

1. Use product-specific ESD procedures when they exceed the requirements noted here.
2. Make sure that the ESD protective devices you use have been certified (ISO 9000) as fully effective.

When handling ESD-sensitive parts:

- Keep the parts in protective packages until they are inserted into the product.
- Avoid contact with other people while handling the part.
- Wear a grounded wrist strap against your skin to eliminate static on your body.
- Prevent the part from touching your clothing. Most clothing is insulative and retains a charge even when you are wearing a wrist strap.
- Use the black side of a grounded work mat to provide a static-free work surface. The mat is especially useful when handling ESD-sensitive devices.
- Select a grounding system, such as those listed below, to provide protection that meets the specific service requirement.

  Note: The use of a grounding system is desirable but not required to protect against ESD damage.

- Attach the ESD ground clip to any frame ground, ground braid, or green-wire ground.
- Use an ESD common ground or reference point when working on a double-insulated or battery-operated system. You can use coax or connector-outside shells on these systems.
- Use the round ground-prong of the ac plug on ac-operated computers.

Grounding requirements

Electrical grounding of the computer is required for operator safety and correct system function. Proper grounding of the electrical outlet can be verified by a certified electrician.

Safety notices (multi-lingual translations)

The caution and danger safety notices in this section are provided in the following languages:

- English
- Arabic
- Brazilian/Portuguese
- Chinese (simplified)
- Chinese (traditional)
- French
- German
- Hebrew
- Italian
- Korean
- Spanish



DANGER

Electrical current from power, telephone and communication cables is hazardous.

To avoid a shock hazard:

- **Do not connect or disconnect any cables or perform installation, maintenance, or reconfiguration of this product during an electrical storm.**
- **Connect all power cords to a properly wired and grounded electrical outlet.**
- **Connect to properly wired outlets any equipment that will be attached to this product.**
- **When possible, use one hand only to connect or disconnect signal cables.**
- **Never turn on any equipment when there is evidence of fire, water, or structural damage.**
- **Disconnect the attached power cords, telecommunications systems, networks, and modems before you open the device covers, unless instructed otherwise in the installation and configuration procedures.**
- **Connect and disconnect cables as described in the following tables when installing, moving, or opening covers on this product or attached devices.**

To Connect	To Disconnect
1. Turn everything OFF. 2. First, attach all cables to devices. 3. Attach signal cables to connectors. 4. Attach power cords to outlet. 5. Turn device ON.	1. Turn everything OFF. 2. First, remove power cords from outlet. 3. Remove signal cables from connectors. 4. Remove all cables from devices.



CAUTION:
When replacing the lithium battery, use only Part Number 45C1566 or an equivalent type battery recommended by the manufacturer. If your system has a module containing a lithium battery, replace it only with the same module type made by the same manufacturer. The battery contains lithium and can explode if not properly used, handled, or disposed of. *Do not:*

- **Throw or immerse into water**
- **Heat to more than 100°C (212°F)**
- **Repair or disassemble**

Dispose of the battery as required by local ordinances or regulations.



CAUTION:
When laser products (such as CD-ROMs, DVD-ROM drives, fiber optic devices, or transmitters) are installed, note the following:

- **Do not remove the covers. Removing the covers of the laser product could result in exposure to hazardous laser radiation. There are no serviceable parts inside the device.**
- **Use of controls or adjustments or performance of procedures other than those specified herein might result in hazardous radiation exposure.**



DANGER

Some laser products contain an embedded Class 3A or Class 3B laser diode. Note the following: Laser radiation when open. Do not stare into the beam, do not view directly with optical instruments, and avoid direct exposure to the beam.



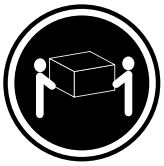

≥18 kg (37 lb)



≥32 kg (70.5 lb)



≥55 kg (121.2 lb)

CAUTION:
Use safe practices when lifting.



CAUTION:
The power control button on the device and the power switch on the power supply do not turn off the electrical current supplied to the device. The device also might have more than one power cord. To remove all electrical current from the device, ensure that all power cords are disconnected from the power source.

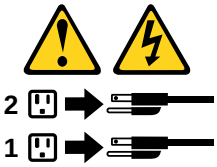



خـــطر

التيـار الكـهربـي المـوجـود بمصـدر الطـاقـة أو أجـهزة التليفـون أو أسـلاك الإتـصالات يشـكل خـطورة.

لـتفادي مخـاطـر الصـدمـات الكـهربـائـية:

لا تحاول توصيل أو فصل أي أسـلاك أو القـيام بعـمليات تـركيب أو صـيانـة أوإعـادة توصـيف لـهذا المنتج أثـناء وجـود عاصـفة كـهربـائـية.

يجـب تـوصـيل كـل أسـلاك الكـهربـاء فـي مخـارج كـهربـاء ذات تـوصـيلات أسـلاك وتـوصـيلات أرضـية صحيـحة
يجـب تـوصـيل أي جـهاز سـيتم الحـاقه بـهذا المـنتج فـي مخارج كـهربـاء ذات تـوصـيلات أسـلاك صحيحة.

وإن أمـكن يـجب اسـتخدام يـد واحـدة فـقط فـي تـوصـيل أو فصـل أسلاك الإشـارة.

لا تحـاول تشغـيل أي جـهاز إذا كـان هنـاك أثـر لحـرق أو مـياه أو تـلف بالمكـونـات
يجـب فصـل أسـلاك الكـهربـاء وأنـظمة الاتصـالات وشـبكات الاتصـال وأجـهزة المـودم الملحـقة قـبل فـتح أغطية الجهاز، مـالـم يـتم طـلب خـلاف ذلك فـي التـعليـمات الخـاصة بالتـركيب والتـوصـيف.
قم بتوصيل وفصل الأسلاك كما هو موضح في الجدول التالي وذلك عند القيام بعمليات التركيب أو النقل أو فتح أغطية هذا المنتج أو الأجهزة الملحقة.

للتوصيل:	للفصل:
قم بإيقاف كل شيء.	قم بإيقاف كل شيء.
أولا، قم بتوصيل كل الأسلاك بالأجهزة.	أولا، قم بفصل كل أسلاك الكهرباء من المخرج.
قم بتوصيل أسلاك الإشارة في لموصلات.	قم بفصل أسلاك الإشارة من الموصلات.
قم بتوصيل أسلاك الكهرباء في المخارج.	قم بفصل كل الأسلاك من الأجهزة.
قم بتشغيل الجهاز.	



تنبيـــه :
عند استبدال البطارية الليثيوم، استخدم فقط رقم الجزء الخاص Part Number 45C1566 أو نوع أخر يكون على نفس مستوى الكفاءة يحدده لك المصنع.
اذا كان النظام الخاص يستخدم معه بطارية ليثيوم قم باستبدالها بنفس النوع الذي تم صناعته من خلال نفس المصنع. تحتوي البطارية على مادة الليثيوم ويمكن أن تنفجرفي حالة عدم استخدامها أو التعامل معها بطريقة صحيحة أو عند التخلص منها بطريقة خطأ.

لا تقم بـــ:
- **القاء البطارية أو غمرها في الماء**
- **تسخينها أعلى من ١٠٠ درجة مئوية°و(٢١٢ ° فهرنهيت)**
- **بتصليحها أو فكها**

تخلص من البطارية طبقا للقانون أو النظام المحلي .



تنبيـــه :
أثناء تركيب منتجات ليزر (مثل CD-ROMsأو وحدة تشغيل DVDأو أجهزة Fiber Optic أو وحدات الارسال) يجب مراعاة الآتي:

لا تنزع الأغطية. قد ينتج عن نزع أغطية منتج الليزر انفجار أشعة الليزر شديدة الخطورة.
لا يوجد أجزاء يمكن تغييرها داخل الجهاز. قد ينتج عن استخدام تحكمات أو تعديلات أو عمل أي تصرفات أخرى تخالف ما هو محددا هنا الى انفجار أشعة شديدة الخطورة.



خطـــر

تحتوى بعض منتجات الليزر على الفئة دايود ليزر مدمج من الفئة Class 3Aأو Class 3B. يجب مراعاة الآتي .

أشعة الليزر عند الفتح. لا تحدق الى الاشعاع و لا تنظر اليه مباشرة بواسطة أي أجهزة مرئية وتجنب التعرض المباشر للاشعاع .



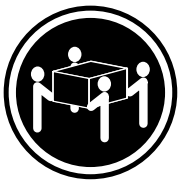

≥55 kg (121.2 lb)



≥32 kg (70.5 lb)

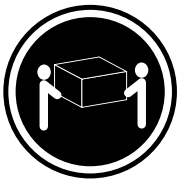

≥18 kg (37 lb)

تنبيه :
يجب استخدام ممارسات آمنة عند الرفع



تنبيـــه :
لا يقم زر التحكم في التشغيل الموجود على الجهاز والمفتاح الكهربائي الموجود على لوحة التحكم بايقاف التيار الكهربائي المار بالجهاز. قد يكون للجهاز أكثر من سلك كهربائي واحد. لايقاف التيار الكهربائي المار بالجهاز، تأكد من فصل جميع أسلاك الكهرباء من مصدر الكهرباء .

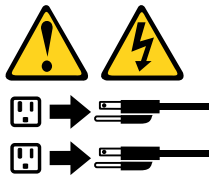



PERIGO

A corrente elétrica proveniente de cabos de alimentação, de telefone e de comunicações é perigosa.

Para evitar risco de choque elétrico:

- Não conecte nem desconecte nenhum cabo ou execute instalação, manutenção ou reconfiguração deste produto durante uma tempestade com raios.
- Conecte todos os cabos de alimentação a tomadas elétricas corretamente instaladas e aterradas.
- Todo equipamento que for conectado a este produto deve ser conectado a tomadas corretamente instaladas.
- Quando possível, utilize apenas uma das mãos para conectar ou desconectar cabos de sinal.
- Nunca ligue nenhum equipamento quando houver evidência de fogo, água ou danos estruturais.
- Antes de abrir tampas de dispositivos, desconecte cabos de alimentação, sistemas de telecomunicação, redes e modems conectados, a menos que especificado de maneira diferente nos procedimentos de instalação e configuração.
- Conecte e desconecte os cabos conforme descrito na tabela apresentada a seguir ao instalar, mover ou abrir tampas deste produto ou de dispositivos conectados.

Para Conectar:	**Para Desconectar:**
1. DESLIGUE Tudo. 2. Primeiramente, conecte todos os cabos aos dispositivos. 3. Conecte os cabos de sinal aos conectores. 4. Conecte os cabos de alimentação às tomadas. 5. LIGUE os dispositivos.	1. DESLIGUE Tudo. 2. Primeiramente, remova os cabos de alimentação das tomadas. 3. Remova os cabos de sinal dos conectores. 4. Remova todos os cabos dos dispositivos.



CUIDADO:

Ao substituir a bateria de lítio, utilize apenas uma bateria com Número de Peça 45C1566 ou um tipo de bateria equivalente recomendado pelo Se o seu sistema possui um módulo com uma bateria de lítio, substitua-o apenas por um módulo do mesmo tipo e do mesmo fabricante. A bateria contém lítio e pode explodir se não for utilizada, manuseada ou descartada de maneira correta.

Não:

- Jogue ou coloque na água
- Aqueça a mais de 100°C (212°F)
- Conserte nem desmonte

Descarte a bateria conforme requerido pelas leis ou regulamentos locais.



PRECAUCIÓN:

Quando produtos a laser (como unidades de CD-ROMs, unidades de DVD-ROM, dispositivos de fibra ótica ou transmissores) estiverem instalados, observe o seguinte:

- Não remova as tampas. A remoção das tampas de um produto a laser pode resultar em exposição prejudicial à radiação de laser. Não existem peças que podem ser consertadas no interior do dispositivo.
- A utilização de controles ou ajustes ou a execução de procedimentos diferentes dos especificados aqui pode resultar em exposição prejudicial à radiação.

PERIGO

Alguns produtos a laser contêm diodo de laser integrado da Classe 3A ou da Classe 3B. Observe o seguinte:

Radiação a laser quando aberto. Não olhe diretamente para o feixe a olho nu ou com instrumentos ópticos e evite exposição direta ao feixe.



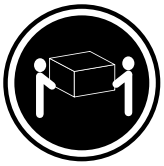

≥18 kg (37 lb)



≥32 kg (70.5 lb)



≥55 kg (121.2 lb)

CUIDADO:

Utilize procedimentos de segurança para levantar equipamentos.



CUIDADO:

O botão de controle de alimentação do dispositivo e o botão para ligar/desligar da fonte de alimentação não desligam a corrente elétrica fornecida ao dispositivo. O dispositivo também pode ter mais de um cabo de alimentação. Para remover toda a corrente elétrica do dispositivo, assegure que todos os cabos de alimentação estejam desconectados da fonte de alimentação.

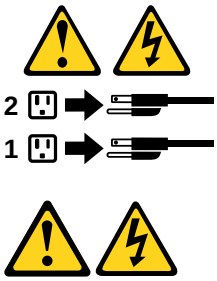

危险

电源、电话和通信电缆中的电流是危险的。

为避免电击危险：

- 请勿在雷电期间连接或断开任何电缆的连接，或者对本产品进行安装、维护或重新配置。
- 将所有电源线连接到正确连线和妥善接地的电源插座。
- 将所有要连接到该产品的设备连接到正确连线的插座。
- 如果可能，请仅使用一只手来连接或断开信号电缆的连接。
- 切勿在有火、水、结构损坏迹象的情况下开启任何设备。
- 在打开设备外盖之前请断开已连接的电源线、远程通信系统、网络和调制解调器，除非在安装和配置过程中另有说明。
- 当安装、移动或打开该产品或连接设备的外盖时，请按照下表所述来连接或断开电缆的连接。

要连接	要断开连接
1. 切断所有电源。 2. 首先将所有电缆连接到设备。 3. 将信号电缆连接到接口。 4. 将电源线连接到插座。 5. 开启设备。	1. 切断所有电源。 2. 首先从插座上拔出电源线。 3. 从接口上拔出信号电缆。 4. 从设备上拔出所有电缆。



警告：
更换锂电池时，请仅使用部件号为 45C1566 的电池或制造商推荐的同类电池。如果您的系统有包含锂电池的模块，请仅使用同一制造商生产的相同模块类型来替换该模块。该电池中含有锂，如果使用、操作或处理不当，可能会发生爆炸。

切勿：

- 投入或浸入水中
- 加热到 100℃（212℉）以上
- 维修或拆卸

请按照当地法令或条例的要求处理电池。



警告：
安装激光产品（例如 CD-ROM、DVD-ROM 驱动器、光纤设备或发射设备）时，请注意以下声明：

- 请勿卸下外盖。卸下激光产品的外盖可能导致遭受激光辐射的危险。该设备内没有可维修的部件。
- 如果不按照此处指定的过程进行控制、调整或操作，则有可能导致遭受辐射的危险。



危险

某些激光产品包含嵌入式 3A 类或 3B 类激光二极管。请注意以下声明：

打开后有激光辐射。请勿注视光束，请勿直接用光学仪器查看，并请避免直接暴露在光束中。



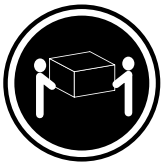

≥18 千克（37 磅）



≥32 千克（70.5 磅）



≥55 千克（121.2 磅）

警告：
抬起时请采取安全措施。



警告：
设备上的电源控制按钮和电源上的电源开关不会切断供给该设备的电流。该设备还可能有多条电源线。要切断该设备的所有电流，请确保所有电源线都与电源断开连接。

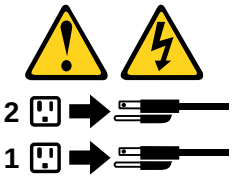



危險

電源、電話及通訊纜線上的電流都具有危險性。
若要避免觸電危險：
- 請勿在雷雨期間，連接或拔除纜線、執行安裝、維護或重新配置本產品。
- 將所有電源線連接到正確配線及接地的電源插座。
- 任何與本產品連接的設備都必須連接到配線妥當的電源插座。
- 請盡可能用單手連接或拔除信號線。
- 發生火災、水災或結構損害時，絕對不要開啟任何設備。
- 除非在安裝及配置程序中另有指示，否則在開啟裝置機蓋之前，請拔掉連接的電源線、電信系統、網路及數據機。
- 安裝、移動或開啟本產品或附屬裝置的機蓋時，請遵循下列說明連接及拔掉纜線。

連線	切斷連線
1. 關閉所有開關。	1. 關閉所有開關。
2. 首先，連接所有接線到裝置。	2. 首先，拔掉插座上的電源線。
3. 連接信號線到接頭。	3. 拔掉接頭上的信號線。
4. 連接電源線到插座。	4. 拔掉裝置上所有接線。
5. 開啟裝置。	



警告：
更換鋰電池時，請僅使用產品編號 **45C1566** 或製造商所建議的同類型電池。
如果您的系統中含有鋰電池模組，請僅使用同一家製造商所生產的相同模組進行更換。
如果未以正確方式使用、處理或棄置含鋰的電池，會有爆炸的危險。
請勿：

- 沾溼或浸入水中
- 置於 **100°C (212°F)** 以上的高溫環境
- 修理或拆開

請按照各地區有關廢棄電池的法令和規定處理舊電池。



警告：
- 請勿移除機蓋。移除雷射產品的機蓋，可能會導致暴露在危險的雷射輻射中。裝置內部並無可自行維修的零件。
- 利用或執行非本文中所指定的控制、調整及執行程序，可能會導致危險的輻射外洩。



危險

部分雷射產品含有內嵌式 **Class 3A** 或 **Class 3B** 雷射二極體。請注意下列事項：
在開啟光碟機時，會發生雷射輻射。請勿直視光束或用光學儀器直接檢視，並避免直接暴露在光束中。



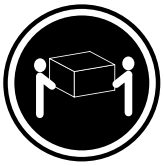

≥ 18 公斤（37 磅）



≥ 32 公斤（70.5 磅）



≥ 55 公斤（121.2 磅）

警告：
搬運時請注意安全。



警告：
裝置上的電源控制按鈕及電源供應器上的電源開關，無法關閉裝置所產生的電流。
該裝置可能有多條電源線。若要除去裝置流出的所有電流，請確認已切斷所有電源線的電源。

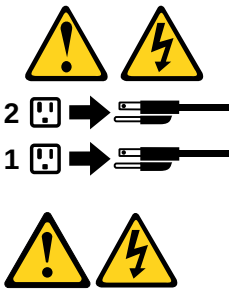

DANGER

Le courant électrique provenant de l'alimentation, du téléphone et des câbles de transmission peut présenter un danger.

Pour éviter tout risque de choc électrique :

- Ne manipulez aucun câble et n'effectuez aucune opération d'installation, d'entretien ou de reconfiguration de ce produit au cours d'un orage.
- Branchez tous les cordons d'alimentation sur un socle de prise de courant correctement câblé et mis à la terre.
- Branchez sur des socles de prise de courant correctement câblés tout équipement connecté à ce produit.
- Lorsque cela est possible, n'utilisez qu'une seule main pour connecter ou déconnecter les câbles d'interface.
- Ne mettez jamais un équipement sous tension en cas d'incendie ou d'inondation, ou en présence de dommages matériels.
- Avant de retirer les carters de l'unité, mettez celle-ci hors tension et déconnectez ses cordons d'alimentation, ainsi que les câbles qui la relient aux réseaux, aux systèmes de télécommunication et aux modems (sauf instruction contraire mentionnée dans les procédures d'installation et de configuration).
- Lorsque vous installez, que vous déplacez, ou que vous manipulez le présent produit ou des périphériques qui lui sont raccordés, reportez-vous aux instructions ci-dessous pour connecter et déconnecter les différents cordons.

Connexion	Déconnexion
1. Mettez les unités HORS TENSION. 2. Commencez par brancher tous les cordons sur les unités. 3. Branchez les câbles d'interface sur des connecteurs. 4. Branchez les cordons d'alimentation sur des prises. 5. Mettez les unités SOUS TENSION.	1. Mettez les unités HORS TENSION. 2. Débranchez les cordons d'alimentation des prises. 3. Débranchez les câbles d'interface des connecteurs. 4. Débranchez tous les câbles des unités.



ATTENTION:

Remplacer la pile au lithium usagée par une pile de référence identique exclusivement, (référence 45C1566), ou suivre les instructions du fabricant qui en définit les équivalences. Si votre système est doté d'un module contenant une pile au lithium, vous devez le remplacer uniquement par un module identique, produit par le même fabricant. La pile contient du lithium et peut exploser en cas de mauvaise utilisation, de mauvaise manipulation ou de mise au rebut inappropriée.

Ne pas :

- **la jeter à l'eau,**
- **l'exposer à des températures supérieures à 100°C,**
- **chercher à la réparer ou à la démonter.**

Ne pas mettre la pile à la poubelle. Pour la mise au rebut, se reporter à la réglementation en vigueur.



ATTENTION:

Si des produits à laser (tels que des unités de CD-ROM, de DVD-ROM, des unités à fibres optiques, ou des émetteurs) sont installés, prenez connaissance des informations suivantes :

- **Ne retirez pas le carter. En ouvrant l'unité de CD-ROM ou de DVD-ROM, vous vous exposez au rayonnement dangereux du laser. Aucune pièce de l'unité n'est réparable.**
- **Pour éviter tout risque d'exposition au rayon laser, respectez les consignes de réglage et d'utilisation des commandes, ainsi que les procédures décrites dans le présent manuel.**



DANGER

Certains produits à laser contiennent une diode à laser intégrée de classe 3A ou 3B. Prenez connaissance des informations suivantes:

Rayonnement laser lorsque le carter est ouvert. Evitez toute expositiondirecte au rayon laser. Evitez de regarder fixement le faisceau ou del'observer à l'aide d'instruments optiques.



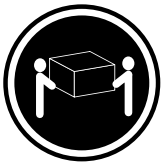

≥18 kg (37 lb)



≥32 kg (70.5 lb)



≥55 kg (121.2 lb)

ATTENTION:

Soulevez la machine avec précaution.



ATTENTION:

L'interrupteur de contrôle d'alimentation de l'unité et l'interrupteur dubloc d'alimentation ne coupent pas le courant électrique alimentantl'unité. En outre, le système peut être équipé de plusieurs cordonsd'alimentation. Pour mettre l'unité hors tension, vous devez déconnectertous les cordons de la source d'alimentation.

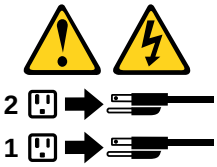



VORSICHT

An Netz-, Telefon- und Datenleitungen können gefährliche Spannungen anliegen.

Aus Sicherheitsgründen:

- **Bei Gewitter an diesem Gerät keine Kabel anschließen oder lösen. Ferner keine Installations-, Wartungs- oder Rekonfigurationsarbeiten durchführen.**
- **Gerät nur an eine Schutzkontaktsteckdose mit ordnungsgemäß geerdetem Schutzkontakt anschließen.**
- **Alle angeschlossenen Geräte ebenfalls an Schutzkontaktsteckdosen mit ordnungsgemäß geerdetem Schutzkontakt anschließen.**
- **Die Signalkabel nach Möglichkeit einhändig anschließen oder lösen, um einen Stromschlag durch Berühren von Oberflächen mit unterschiedlichem elektrischem Potenzial zu vermeiden.**
- **Geräte niemals einschalten, wenn Hinweise auf Feuer, Wasser oder Gebäudeschäden vorliegen.**

- **Die Verbindung zu den angeschlossenen Netzkabeln, Telekommunikationssystemen, Netzwerken und Modems ist vor dem Öffnen des Gehäuses zu unterbrechen, sofern in den Installations- und Konfigurationsprozeduren keine anders lautenden Anweisungen enthalten sind.**
- **Zum Installieren, Transportieren und Öffnen der Abdeckungen des Computers oder der angeschlossenen Einheiten die Kabel gemäß der folgenden Tabelle anschließen und abziehen.**

Zum Anschließen der Kabel gehen Sie wie folgt vor	Zum Abziehen der Kabel gehen Sie wie folgt vor
1. Schalten Sie alle Einheiten AUS. 2. Schließen Sie erst alle Kabel an die Einheiten an. 3. Schließen Sie die Signalkabel an die Buchsen an. 4. Schließen Sie die Netzkabel an die Steckdose an. 5. Schalten Sie die Einheit EIN.	1. Schalten Sie alle Einheiten AUS. 2. Ziehen Sie zuerst alle Netzkabel aus den Netzsteckdosen. 3. Ziehen Sie die Signalkabel aus den Buchsen. 4. Ziehen Sie alle Kabel von den Einheiten ab.



CAUTION:

Eine verbrauchte Lithiumbatterie nur durch eine Batterie mit der Teilenummer 45C1566 oder eine gleichwertige, vom Hersteller empfohlene Batterie ersetzen. Enthält das System ein Modul mit einer Lithiumbatterie, dieses nur durch ein Modul desselben Typs und von demselben Hersteller ersetzen. Die Batterie enthält Lithium und kann bei unsachgemäßer Verwendung, Handhabung oder Entsorgung explodieren.

Die Batterie nicht:

- mit Wasser in Berührung bringen.
- über 100 C erhitzen.
- reparieren oder zerlegen.

Die örtlichen Bestimmungen für die Entsorgung von Sondermüll beachten.



ACHTUNG:

Bei der Installation von Lasergeräten (wie CD-ROM-Laufwerken, DVD- aufwerken, Einheiten mit Lichtwellenleitertechnik oder Sendern) Folgendes beachten:

- **Die Abdeckungen nicht entfernen. Durch Entfernen der Abdeckungen des Lasergeräts können gefährliche Laserstrahlungen freigesetzt werden. Das Gerät enthält keine zu wartenden Teile.**
- **Werden Steuerelemente, Einstellungen oder Durchführungen von Prozeduren anders als hier angegeben verwendet, kann gefährliche Laserstrahlung auftreten.**



VORSICHT

Einige Lasergeräte enthalten eine Laserdiode der Klasse 3A oder 3B. Beachten Sie Folgendes:

Laserstrahlung bei geöffneter Verkleidung. Nicht in den Strahl blicken. Keine Lupen oder Spiegel verwenden. Strahlungsbereich meiden.





≥18 kg ≥32 kg ≥55 kg

ACHTUNG:

Arbeitsschutzrichtlinien beim Anheben der Maschine beachten.



ACHTUNG:

Mit dem Netzschalter an der Einheit und am Netzteil wird die Stromversorgung für die Einheit nicht unterbrochen. Die Einheit kann auch mit mehreren Netzkabeln ausgestattet sein. Um die Stromversorgung für die Einheit vollständig zu unterbrechen, müssen alle zum Gerät führenden Netzkabel vom Netz getrennt werden.

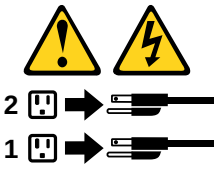



סכנה

זרם חשמלי המועבר בכבלי חשמל, טלפון ותקשורת הוא מסוכן.

כדי להימנע מסכנת התחשמלות:

- אל תחברו או תנתקו כבלים, ואל תבצעו פעולת התקנה, תחזוקה או שינוי תצורה במוצר זה במהלך סופת ברקים.
- חברו את כל כבלי החשמל לשקע חשמל מחווט ומוארק כהלכה.
- חברו כל ציוד שיחובר למוצר זה לשקעי חשמל מחווטים כהלכה.
- במידת האפשר, השתמשו ביד אחת בלבד לחיבור או לניתוק של כבלי אותות.
- לעולם אל תפעילו ציוד כלשהו כאשר יש עדות לנזק מבני או לנזק כתוצאה מאש או ממים.
- נתקו את כבלי החשמל, מערכות התקשורת, התקני הרשת והמודמים המחוברים לפני פתיחת כיסויי ההתקן, אלא אם הליכי ההתקנה וקביעת התצורה מורים אחרת.
- בעת התקנה, העברה או פתיחת כיסויים במוצר זה או בהתקנים המחוברים, חברו ונתקו את הכבלים כמתואר בטבלה שלהלן.

כדי לחבר	כדי לנתק
1. כבו הכל.	1. כבו הכל.
2. ראשית, חברו את כל הכבלים להתקנים.	2. ראשית, נתקו את כבלי החשמל מהשקעים.
3. חברו את כבלי האותות למחברים.	3. נתקו את כבלי האותות מהמחברים.
4. חברו את כבלי החשמל לשקעים.	4. הסירו את כל הכבלים מההתקנים.
5. הפעילו את ההתקן.	



זהירות:
בעת החלפת סוללת הליתיום, השתמשו רק בסוללה בעלת מק"ט 45C1566 או בסוג תואם שהומלץ על ידי היצרן. אם המערכת כוללת מודול המכיל סוללת ליתיום, החליפו אותו רק במודול מאותו סוג ומתוצרת אותו יצרן. הסוללה מכילה ליתיום, ועלולה להתפוצץ אם לא משתמשים ומטפלים בה או משליכים אותה כיאות.

לעולם:

- אל תטבלו במים
- אל תחממו לטמפרטורה הגבוהה מ-100°C (212°F)
- אל תתקנו או תפרקו

השליכו את הסוללה כנדרש לפי התקנות והחוקים המקומיים.



זהירות:
בעת התקנת מוצרי לייזר (כגון כונני תקליטורים ו-DVD, התקני סיב אופטי או משדרים), שימו לב לאזהרות הבאות:

- אל תסירו את הכיסויים. הסרת הכיסויים של מוצר הלייזר עלולה לגרום לחשיפה לקרינת לייזר מסוכנת. אין חלקים ברי טיפול בתוך ההתקן.
- שינויים, שימוש בבקרות או ביצוע הליכים אחרים מאלה המתוארים כאן, עלולים לגרום לחשיפה לקרינה מסוכנת.



סכנה

מוצרי לייזר מסוימים מכילים דיודת לייזר מסוג Class 3A או Class 3B. שימו לב לאזהרה הבאה:

כאשר הוא פתוח, המוצר פולט קרינת לייזר. אל תביטו ישירות בקרן, אל תביטו ישירות בעזרת ציוד אופטי, והימנעו מחשיפה לקרן.



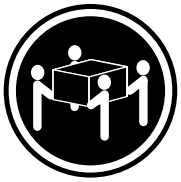

≥ 55 ק"ג (121.2 ליב')

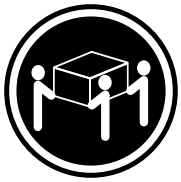

≥ 32 ק"ג (70.5 ליב')

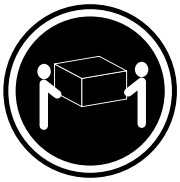

≥ 18 ק"ג (37 ליב')

זהירות:
השתמשו בהליכים
הנאותים בעת
הרמת הציוד.





זהירות:
לחצן ההפעלה של ההתקן ומתג ההפעלה של ספק החשמל אינם מפסיקים את זרם החשמל המסופק להתקן. בנוסף, ההתקן עשוי לכלול יותר מכבל חשמל אחד. כדי לסלק את כל הזרם החשמלי מההתקן, ודאו שכל כבלי החשמל מנותקים ממקור החשמל.

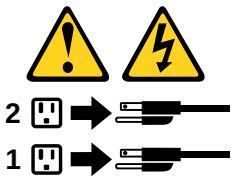



PERICOLO

La corrente elettrica proveniente dai cavi di alimentazione, del telefono e di comunicazione può essere pericolosa.

Per evitare il rischio di scosse elettriche:

- **Non collegare o scollegare qualsiasi cavo oppure effettuare l'installazione, la manutenzione o la riconfigurazione del prodotto durante un temporale.**
- **Collegare tutti i fili elettrici a una presa di alimentazione correttamente cablata e dotata di messa a terra.**
- **Collegare alle prese elettriche appropriate tutte le apparecchiature che verranno utilizzate per questo prodotto.**
- **Se possibile, utilizzare solo una mano per collegare o scollegare i cavi di segnale.**
- **Non accendere assolutamente apparecchiature in presenza di incendi, perdite d'acqua o danno strutturale.**
- **Scollegare i cavi di alimentazione, i sistemi di telecomunicazione, le reti e il modem prima di aprire i coperchi del dispositivo, salvo istruzioni contrarie relative alle procedure di installazione e configurazione.**
- **Collegare e scollegare i cavi come descritto nella seguente tabella quando vengono effettuate operazioni di installazione, spostamento o apertura dei coperchi di questo prodotto o delle unità collegate.**

Per collegarsi	Per scollegarsi
1. SPEGNERE le apparecchiature. 2. Innanzitutto, collegare tutti i cavi alle unità. 3. Collegare i cavi di segnale ai connettori. 4. Collegare i cavi di alimentazione alla presa. 5. Accendere l'unità.	1. SPEGNERE le apparecchiature. 2. Innanzitutto, rimuovere i cavi di alimentazione dalla presa. 3. Rimuovere i cavi di segnale dai connettori. 4. Rimuovere tutti i cavi dalle unità.



ATTENZIONE:

Quando si sostituisce la batteria al litio, utilizzare solo il Numero parte 45C1566 o un tipo di batteria equivalente consigliato dal produttore. Se sul sistema è presente un modulo che contiene una batteria al litio, sostituirlo solo con un tipo di modulo dello stesso tipo della stessa casa di produzione. La batteria contiene litio e può esplodere se usata, maneggiata o smaltita in modo non corretto.

Non:

- **Gettare o immergere la batteria nell'acqua**
- **Riscaldarla ad una temperatura superiore ai 100 gradi C (212 gradi F)**
- **Smontarla, ricaricarla o tentare di ripararla**

Le batterie usate vanno smaltite in accordo alla normativa in vigore (DPR 915/82 e successive disposizioni e disposizioni locali).



ATTENZIONE:

Quando vengono installati prodotti laser (quali CD-ROM, unità DVD-ROM, unità a fibre ottiche o trasmittenti), tener presente quanto segue:

- **Non rimuovere gli sportelli. L'apertura di un'unità laser può determinare l'esposizione a radiazioni laser pericolose. All'interno dell'unità non vi sono parti su cui effettuare l'assistenza tecnica.**
- **L'utilizzo di controlli, regolazioni o l'esecuzione di procedure non descritti nel presente manuale possono provocare l'esposizione a radiazioni pericolose.**



PERICOLO

Alcune unità laser contengono un diodo laser di Classe 3A o Classe 3B. Tener presente quanto segue:

Aprendo l'unità vengono emesse radiazioni laser. Non fissare il fascio, non guardarlo direttamente con strumenti ottici ed evitare l'esposizione al fascio.





≥18 kg ≥32 kg ≥55 kg

ATTENZIONE:

Prestare attenzione nel sollevare l'apparecchiatura.



ATTENZIONE:

Il pulsante di controllo dell'alimentazione presente sull'unità e l'interruttore dell'alimentatore non disattivano l'alimentazione corrente fornita all'unità. E' possibile che l'unità disponga di più cavi di alimentazione. Per disattivare l'alimentazione dall'unità, accertarsi che tutti i cavi di alimentazione siano scollegati dalla fonte di alimentazione.

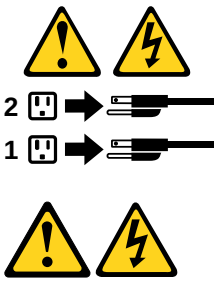

위험

전원, 전화, 통신 케이블의 전류는 위험합니다.

감전의 위험을 피하려면 다음과 같이 하십시오.

- 번개가 치는 날에는 케이블을 연결 또는 분리하거나 본 제품을 설치, 보수, 재구성하지 마십시오.

- 모든 전원 코드는 올바르게 접지된 전기 콘센트에 연결하십시오.

- 본 제품에 연결될 장치는 올바르게 배선된 콘센트에 연결하십시오.

- 신호 케이블을 연결 또는 분리할 때 가능하면 한 손만을 사용하십시오.

- 불 또는 물로 인한 손상이나 구조적인 손상이 있을 경우 장치의 전원을 절대 켜지 마십시오.

- 설치 및 구성 과정에 별도의 지시 사항이 없는 경우, 장치의 덮개를 열기 전에 연결된 전원 코드, 원격 통신 시스템, 네트워크, 모뎀을 분리하십시오.

- 본 제품이나 연결된 장치를 설치, 이동하거나 덮개를 열 때 다음 표와 같은 순서로 케이블을 연결하거나 분리하십시오.

연결할 때:	분리할 때:
1. 모든 장치의 전원을 끄십시오. 2. 먼저 모든 케이블을 장치에 연결하십시오. 3. 커넥터에 신호 케이블을 연결하십시오. 4. 콘센트에 전원 코드를 연결하십시오. 5. 장치의 전원을 켜십시오.	1. 모든 장치의 전원을 끄십시오. 2. 먼저 콘센트에서 전원 코드를 분리하십시오. 3. 커넥터에서 신호 케이블을 분리하십시오. 4. 장치에서 모든 케이블을 분리하십시오.



주의:
배터리를 교환할 때는 Part Number 45C1566 또는 제조업체에서 지정한 동일한 종류의 제품을 사용하십시오. 사용자의 시스템이 리튬 배터리를 포함하는 모듈일 경우, 동일한 제조업체에서 동일한 모듈 유형으로 생산된 제품으로 교체하십시오. 배터리에는 리튬이 함유되어 있어 잘못 사용, 취급 또는 폐기할 경우 폭발의 위험이 있습니다.

사고를 방지하려면 다음 사항을 준수하십시오.

- 배터리를 물 속에 던지거나 침수시키지 마십시오.

- 100℃(212°F) 이상 가열하지 마십시오.

- 수리하거나 분해하지 마십시오.

배터리를 폐기할 때는 법령 또는 회사의 안전 수칙에 따라 폐기하십시오.



주의:
CD-ROM, DVD-ROM 장치, 광섬유 장치 또는 송신 장치와 같은 레이저 제품을 설치할 때, 다음과 같은 취급 주의사항을 참고하십시오.

- 덮개를 열지 마십시오. 덮개를 열면 레이저 복사 에너지에 노출될 위험이 있습니다. 장치 내부에는 사용자가 조정하거나 수리할 수 있는 부품이 없습니다.

- 규정된 것 이외의 절차 수행, 제어 조정 등의 행위로 인해 해로운 레이저 복사에 노출될 수 있습니다.



위험

일부 장비에는 임베디드 클래스 3A 또는 클래스 3B 레이저 다이오드가 있습니다. 다음 주의사항에 유의하십시오.

드라이브가 열리면 레이저 복사 에너지가 방출됩니다. 광선이 눈에 직접 쏘이지 않도록 하십시오. 나안 또는 광학 기구를 착용한 상태에서 광선을 직접 바라보지 않도록 하십시오.





≥18 kg (37 lbs) ≥32 kg (70.5 lbs) ≥55 kg (121.2 lbs)

주의:
제품을 들어 올릴 때
안전 규제를 따르십시오.



주의:
장치의 전원 제어 버튼 및 전원 공급 장치의 전원 스위치를 사용하여 장치에 공급되는 전기를 차단하지 마십시오. 장치는 둘 이상의 코드를 가지고 있을 수 있습니다. 장치에서 모든 전원을 차단하려면 콘센트에서 코드가 모두 분리되어 있는지 확인하십시오.

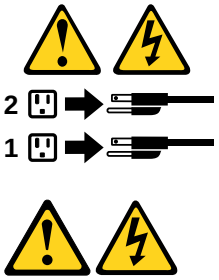

PELIGRO

La corriente eléctrica procedente de cables de alimentación, teléfonos y cables de comunicación puede ser peligrosa.

Para evitar el riesgo de descarga eléctrica:

- **No conecte ni desconecte los cables ni realice ninguna tarea de instalación, mantenimiento o reconfiguración de este producto durante una tormenta eléctrica.**
- **Conecte todos los cables de alimentación a tomas de corriente debidamente cableadas y conectadas a tierra.**
- **Cualquier equipo que se conecte a este producto también debe conectarse a tomas de corriente debidamente cableadas.**
- **Siempre que sea posible, utilice una sola mano para conectar o desconectar los cables de señal.**

- **No encienda nunca un equipo cuando hay señales de fuego, agua o daños estructurales.**
- **Desconecte los cables de alimentación, los sistemas de telecomunicaciones, las redes y los módems conectados antes de abrir las cubiertas de los dispositivos, a menos que se indique lo contrario en los procedimientos de instalación y configuración.**
- **Conecte y desconecte los cables, como se describe en la tabla siguiente, cuando instale, mueva o abra las cubiertas de este producto o de los dispositivos conectados.**

Para conectar	Para desconectar
1. APÁGUELO todo. 2. En primer lugar, conecte todos los cables a los dispositivos. 3. Conecte los cables de señal a los conectores. 4. Enchufe los cables de alimentación a las tomas de corriente. 5. Encienda el dispositivo.	1. APÁGUELO todo. 2. En primer lugar, desenchufe los cables de alimentación de las tomas de corriente. 3. Desconecte los cables de señal de los conectores. 4. Desconecte todos los cables de los dispositivos.



PRECAUCIÓN:

Cuando sustituya una batería de litio, utilice solamente una batería número de pieza 45C1566 u otra de tipo equivalente recomendada por el fabricante. Si su sistema dispone de un módulo que contiene una batería de litio, reemplácelo sólo con el mismo tipo de módulo, del mismo fabricante. La batería contiene litio y puede explotar si no se utiliza, manipula o desecha correctamente.

No debe:

- **Arrojarla al agua o sumergirla en ella**
- **Exponerla a temperaturas superiores a 100°C (212°F)**
- **Repararla o desmontarla**

Deshágase de la batería según especifiquen las leyes o normas locales.



PRECAUCIÓN:

Cuando haya productos láser (como unidades de CD-ROM, unidades de DVD, dispositivos de fibra óptica o transmisores) instalados, tenga en cuenta lo siguiente:

- **No quite las cubiertas. Si quita las cubiertas del producto láser, podría quedar expuesto a radiación láser peligrosa. Dentro del dispositivo no existe ninguna pieza que requiera servicio técnico.**
- **Si usa controles o ajustes o realiza procedimientos que no sean los especificados aquí, podría exponerse a radiaciones peligrosas.**



PELIGRO

Algunos productos láser tienen incorporado un diodo láser de clase 3A o clase 3B. Tenga en cuenta lo siguiente:

Cuando se abre, queda expuesto a radiación láser. No mire directamente al rayo láser, ni siquiera con instrumentos ópticos, y evite exponerse directamente al rayo láser.





≥18 kg ≥32 kg ≥55 kg

PRECAUCIÓN:

Adopte procedimientos seguros al levantar el equipo.



PRECAUCIÓN:

El botón de control de alimentación del dispositivo y el interruptor de alimentación de la fuente de alimentación no desconectan la corriente eléctrica suministrada al dispositivo. Además, el dispositivo podría tener más de un cable de alimentación. Para suprimir toda la corriente eléctrica del dispositivo, asegúrese de que todos los cables de alimentación estén desconectados de la toma de corriente.

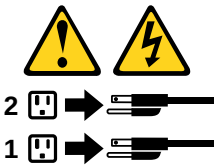

Chapter 2. Product overview

This chapter provides basic information to help you get familiar with your computer.

Hardware locations

This section provides information about the locations of your computer hardware.

Front view

Note: The computer hardware might look slightly different from the illustration.

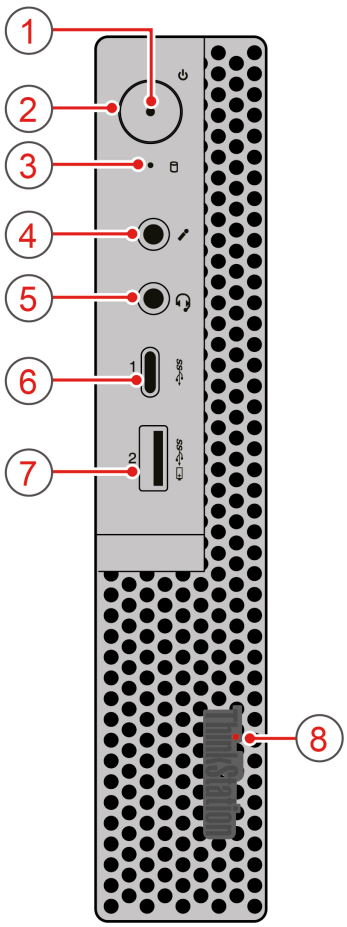

Figure 1. Front connectors, controls, and indicators

1 Power indicator	2 Power button
3 Storage drive status indicator	4 Microphone connector
5 Headset connector	6 Type-C USB 3.0 connector
7 Always On USB 3.0 connector	8 Illuminated red dot

© Copyright Lenovo 2018, 2019

1 Power indicator

When the power indicator is on, the computer is turned on.

2 Power button

Press the power button to turn on your computer. If your computer is unresponsive, you can turn off the computer by pressing and holding the power button for four or more seconds.

3 Storage drive status indicator

This indicator shows the status of the internal storage drives (such as hard disk drives or solid-state drives).

On: The storage drives are active and data is being transferred.

Off (when the computer is powered on): No data is being transferred or the storage drives are not in use.

4 Microphone connector

Use this connector to attach a microphone to your computer when you want to record sound or if you use speech-recognition software.

5 Headset connector

Use this connector to attach a headset to your computer.

6 Type-C USB 3.0 connector

Used to connect a USB-compatible device, such as a USB keyboard, mouse, scanner, printer, or personal digital assistant (PDA). For optimal data transfer, connect a USB 3.0 device to a USB 3.0 connector instead of a USB 2.0 connector.

7 Always On USB 3.0 connector

Use this connector to attach a USB-compatible device, such as a USB keyboard, mouse, storage drive, or printer. With the power cord connected, you can charge the connected USB device even when the computer is in hibernation mode or turned off.

8 Illuminated red dot

This indicator is on when the computer is on.

Rear view

Note: The computer hardware might look slightly different from the illustration.

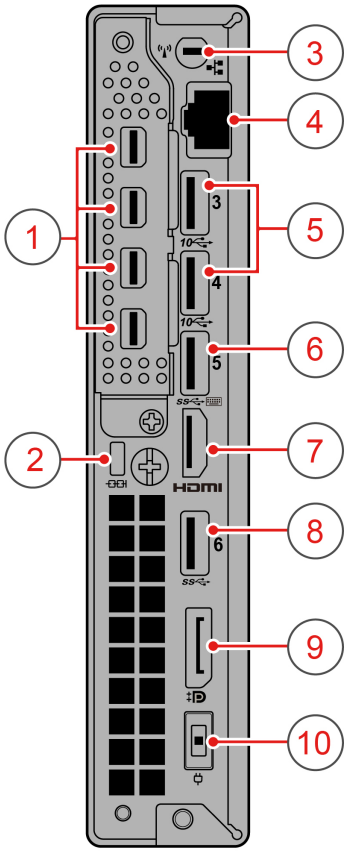

Figure 2. Rear view

1 Mini DisplayPort® connectors (4)	2 Security-lock slot
3 Wi-Fi antenna slot	4 Ethernet connector
5 USB 3.1 connectors Gen 2 (2)	6 USB 3.0 connector
7 HDMI-out connector	8 USB 3.0 connector
9 DisplayPort® connector	10 Power-cord connector

1 Mini DisplayPort connectors (4)

Use this connector to attach a high-performance monitor, a direct-drive monitor, or other compatible devices. The Mini DisplayPort connector is a miniaturized version of a DisplayPort connector.

2 Security-lock slot

Attach a Kensington-style cable lock to the security-lock slot to secure your computer. For more information, see “Attaching a Kensington-style cable lock” on page 51.

3 Wi-Fi antenna slot

Used to install the rear Wi-Fi antenna cable connector that is available only on some models. The rear Wi-Fi antenna is installed on the rear Wi-Fi antenna cable connector.

4 Ethernet connector

Connect an Ethernet cable for a local area network (LAN).

Note: To operate the computer within Federal Communications Commission (FCC) Class B limits, use a Category 5 Ethernet cable.

5 USB 3.1 connectors Gen 2 (2)

With greater data transfer rate and faster charging speed, the USB 3.1 connector Gen 2 is used to connect USB-compatible devices, such as a USB keyboard, a USB mouse, a USB storage device, or a USB printer.

6 USB 3.0 connector

Use this connector to attach a USB-compatible device, such as a USB keyboard, mouse, storage drive, or printer.

Note: The USB 3.0 connector supports the smart power on feature that enables you to turn on the computer or wake it up from hibernation mode by pressing Alt+P on the keyboard. You can enable or disable the smart power on feature from the Setup Utility program.

7 HDMI-out connector

Used to send video and audio signals from your computer to another audio or video device, such as a high performance monitor.

8 USB 3.0 connector

Use this connector to attach a USB-compatible device, such as a USB keyboard, mouse, storage drive, or printer.

9 DisplayPort connector

Use this connector to attach a high-performance monitor, a direct-drive monitor, or other compatible devices.

10 Power-cord connector

Connect the power cord to your computer for power supply.

Parts on the system board

Note: See “Front view” and “Rear view” for additional component descriptions.

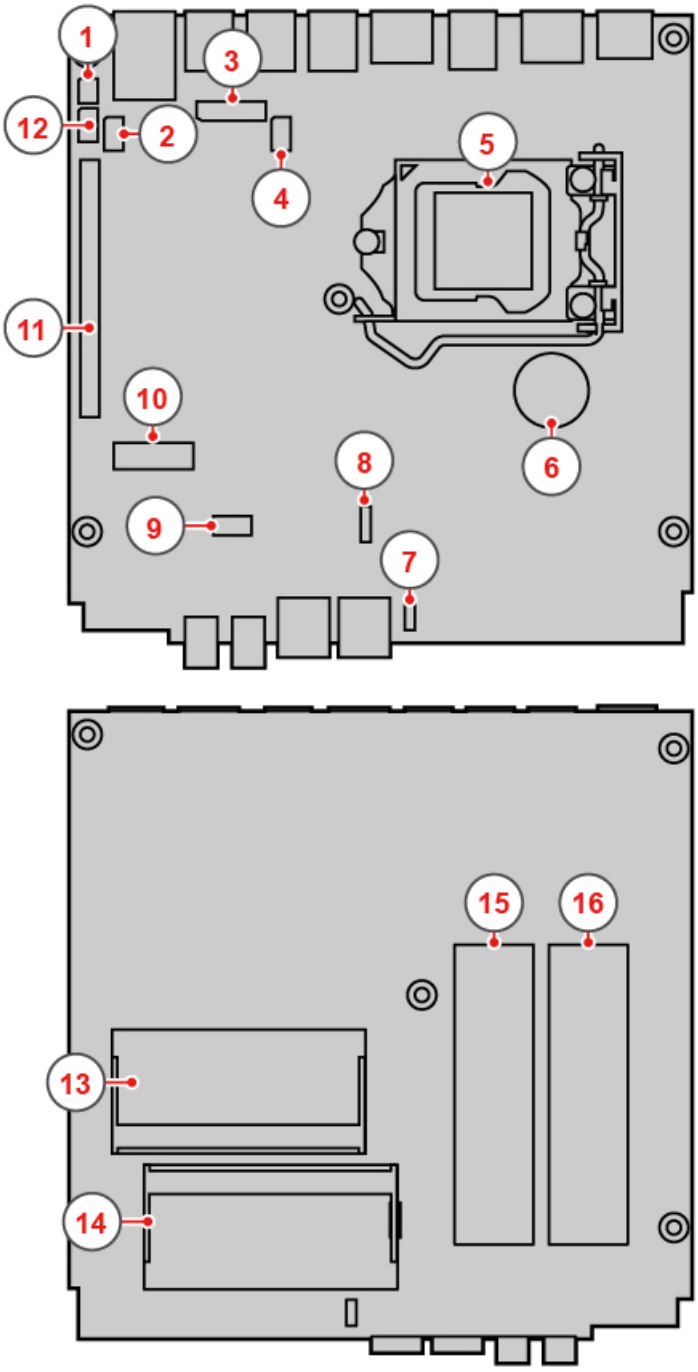

Figure 3. System board part locations

1 Clear CMOS (Complementary Metal Oxide Semiconductor) / Recovery jumper	2 Thunderbolt connector
3 Board to board connector	4 DC connector
5 Microprocessor	6 Coin-cell battery
7 Internal-speaker or advanced-speaker connector	8 System fan connector

9 Storage drive slot	10 M.2 Wi-Fi card slot
11 PCI Express card slot	12 Serial connector
13 Memory slot 1 (DIMM 1)	14 Memory slot 2 (DIMM 2)
15 M.2 storage drive slot 2	16 M.2 storage drive slot 1

Machine type and model label

The machine type and model label identifies your computer. When you contact Lenovo for help, the machine type and model information helps support technicians to identify your computer and provide faster service.

The machine type and model label is attached on the top of your computer as shown.

Note: The computer hardware might look slightly different from the illustration.

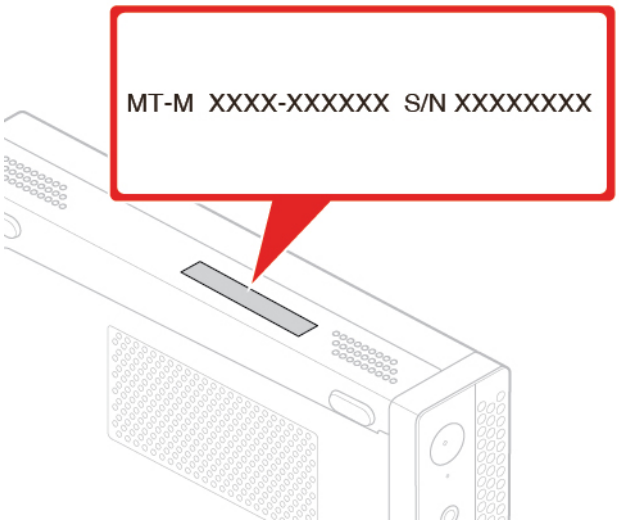

Figure 4. Machine type and model label

Major FRUs and CRUs

The following illustration shows the locations of the major FRUs and CRUs in the computer. To remove the computer cover, see “Computer cover” on page 95.

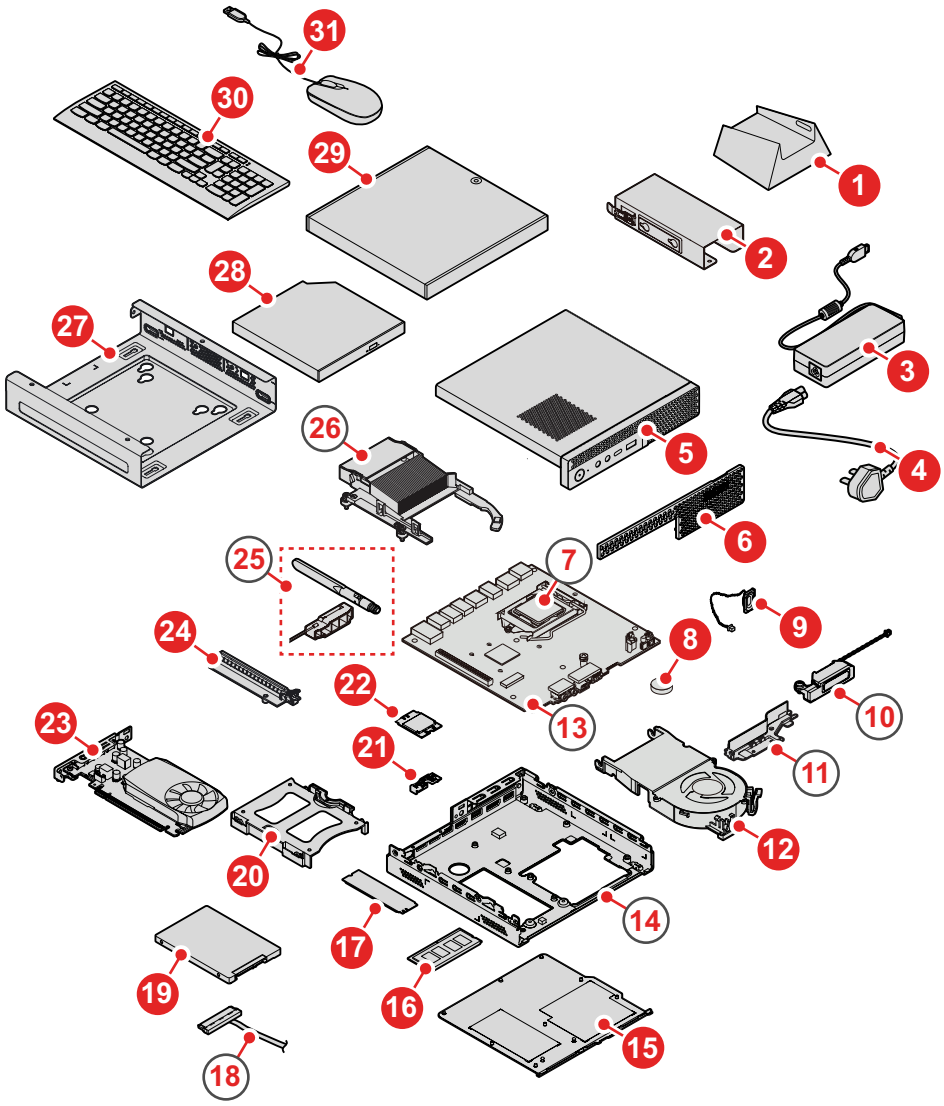

Figure 5. Major FRUs and CRUs

The following table lists the major FRUs and CRUs shown in Figure 5 “Major FRUs and CRUs” on page 35 and identifies which CRUs are self-service CRUs or optional-service CRUs.

Notes:

- Self-service CRUs: Refer to parts that can be installed or replaced easily by customer themselves or by trained service technicians at an additional cost.
- Optional-service CRUs: Refer to parts that can be installed or replaced by customers with a greater skill level. Trained service technicians can also provide service to install or replace the parts under the type of warranty designated for the customer’s machine.
- FRUs: Refer to parts that must be installed or replaced only by trained service technicians. If customers choose to replace the FRUs by themselves, the product warranty might be affected.

Self-service CRUs	**Optional-service CRUs**	**Non-CRUs**
1 Vertical stand	8 Coin-cell battery	7 Microprocessor
2 Power adapter bracket	12 System fan	10 Advanced speaker

Self-service CRUs	Optional-service CRUs	Non-CRUs
3 Power adapter	19 Storage drive	11 Antenna bracket
4 Power cord	20 Storage drive bracket	13 System board
5 Computer cover	21 Wi-Fi card shield	14 Chassis
6 Dust shield	22 Wi-Fi card	18 Storage drive cable
9 Internal speaker	23 Graphics card	25 Wi-Fi antennas
15 Bottom cover	24 PCIe converter	26 Heat sink
16 Memory module		
17 M.2 solid-state drive		
27 VESA® mount bracket		
28 External optical drive		
29 External optical drive box		
30 Keyboard		
31 Mouse		

For detailed FRU and CRU information, such as the FRU part numbers and supported computer models, go to:
http://www.lenovo.com/serviceparts-lookup

Computer features

For your specific computer model, some features might vary or not apply.

Information about your computer

- To view basic information (such as microprocessor and memory information) about your computer, do the following:
  1. Click the Start button to open the Start menu.
  2. Click **Settings → System → About**.
- To view detailed information about the devices (such as the optical drive and network adapters) on your computer, do the following:
  1. Right-click the Start button to open the Start context menu.
  2. Click **Device Manager**.
  3. Locate and double-click your device in **Device Manager** to view device properties. Type the administrator password or provide confirmation if prompted.

Memory

Up to two double data rate 4 (DDR4) error correction code (ECC) small outline dual inline memory modules (SODIMMs).

Storage drives

Your computer supports one or two M.2 solid-state drives.

To view the amount of storage drive space, do the following:

1. Right-click the Start button to open the Start context menu.

2. Click **Disk Management** and follow the instructions on the screen.

Video features

PCIe card slot on the system board for a discrete graphics card

Audio features

The integrated audio card supports the following connectors and devices on your computer:

- Advanced speaker (available on some models)
- Headset connector
- Internal speaker (available on some models)
- Microphone connectors

Input/Output (I/O) features

- Audio connectors (microphone connector and headset connector)
- Display connectors (DisplayPort connector and Mini DisplayPort connectors)
- Ethernet connector
- HDMI-out connector
- Serial connector
- Type-C USB connector
- USB connector (including one always on USB connector)

Expansion

- External optical drive box (available on some models)
- M.2 solid-state drive slots
- Memory slots
- PCIe graphics card slot

Power supply

Your computer comes with one of the following power supplies:

- 135-watt automatic voltage-sensing power supply

Wireless features

Depending on your computer model, the following wireless features are supported:

- Wireless LAN (available on some models)
- Bluetooth (available on some models)

System management features

- Ability to store power-on self-test (POST) hardware test results
- Desktop Management Interface (DMI)

  Desktop Management Interface provides a common path for users to access information about all aspects of a computer. The information includes the processor type, installation date, attached printers and other peripherals, power sources, and maintenance history.
- ErP LPS compliance mode

The energy-related products directive (ErP) lowest power state (LPS) compliance mode reduces the consumption of electricity when your computer is in sleep or off mode. For more information, see “Enabling or disabling the ErP LPS compliance mode” on page 56.

- Intel® Standard Manageability (ISM)

  Intel Standard Manageability builds certain functionalities into computer hardware and firmware. Therefore, computers are less expensive for businesses and easier to monitor, maintain, update, upgrade, and repair.

- Intel Active Management Technology (Intel AMT)

  With specific Intel platform capabilities and third-party management and security applications, Intel Active Management Technology enables IT administrators or managed service providers to easily and remotely discover, repair, and protect their networked computing assets.

- Preboot Execution Environment (PXE)

  Preboot Execution Environment enables you to start computers using a network interface. This manner is independent of starting computers from data storage devices (such as the hard disk drive) or installed operating systems.

- System Management (SM) basic input/output system (BIOS) and SM software

  The SM BIOS specification defines data structures and access methods in a BIOS. Therefore, a user or an application can store and retrieve information specific about the computer in question.

- Wake on LAN (WOL)

  Wake on LAN is an Ethernet computer networking standard that allows a computer to be turned on or woken up by a network message. The message is usually sent by a program running on another computer on the same local area network.

- Windows Management Instrumentation (WMI)

  Windows Management Instrumentation is a set of extensions to the Windows Driver Model. It provides an operating system interface through which instrumented components provide information and notification.

Security features

- Ability to enable and disable a device
- Ability to enable and disable USB connectors individually
- Antivirus program
- BIOS passwords and Microsoft® Windows® accounts to deter unauthorized use of your computer
- Computrace Agent software embedded in firmware
- Firewalls
- Smart USB Protection function
- Startup sequence control
- Startup without a keyboard or mouse
- Support for a Kensington-style cable lock
- Trusted Platform Module (TPM)

Preinstalled operating system

Your computer is preinstalled with the Windows 10 operating system. Additional operating systems might be identified by Lenovo as compatible with your computer. To determine if an operating system has been certified or tested for compatibility, check the Web site of the operating system provider.

Computer specifications

This section lists the physical specifications for your computer.

Dimensions

- Width: 37 mm (1.5 inches)
- Height: 179 mm (7.0 inches)
- Depth: 183 mm (7.2 inches)

Weight

Maximum configuration as shipped: 1.3 kg (2.9 lb)

Environment

- Air temperature:

  Operating: From 10°C (50°F) to 35°C (95°F)

  Storage in original shipping package: From -40°C (-40°F) to 60°C (140°F)

  Storage without package: From -10°C (14°F) to 60°C (140°F)
- Humidity:

  Operating: 10%–80% (non-condensing)

  Storage: 10%–90% (non-condensing)
- Altitude:

  Operating: From -15.2 m (-50 ft) to 3048 m (10 000 ft)

  Storage: From -15.2 m (-50 ft) to 10 668 m (35 000 ft)

Electrical input

- Input voltage: From 100 V ac to 240 V ac
- Input frequency: 50/60 Hz

Statement on USB transfer rate

Depending on many factors such as the processing capability of the host and peripheral devices, file attributes, and other factors related to system configuration and operating environments, the actual transfer rate using the various USB connectors on this device will vary and will be slower than the data rate listed below for each corresponding device.

USB device	Data rate (Gbit/s)
3.1 Gen 1	5
3.1 Gen 2	10
3.2	20

Programs

This section provides information about the programs on your computer.

Accessing a program on your computer

To access a program on your computer, do one of the following:

- From Windows Search:
  1. Type the program name into the search box next to the Start button.
  2. In the search results, click the name of the desired program to launch the program.
- From the Start menu or Control Panel:
  1. Click the Start button to open the Start menu. Then, click the name of the desired program to launch the program.
  2. If the program name is not displayed on the Start menu, access the program from Control Panel.
     a. Click the Start button to open the Start menu.
     b. Click **Windows System → Control Panel**.
     c. View Control Panel by Large icons or Small icons, and then click the name of the desired program to launch the program.

An introduction to Lenovo programs

This section provides information about the major Lenovo programs available on your operating system.

Note: Depending on your computer model, some of the following programs might not be available.

- **Lenovo Vantage**

  Your computer's best features and capabilities should be easy to access and understand. With Lenovo Vantage, they are.

  Use Lenovo Vantage to do the following:

  – Know the device status easily and customize device settings.
  – Download and install UEFI BIOS, firmware, and driver updates to keep your computer up-to-date.
  – Monitor your computer health, and secure your computer against outside threats.
  – Look up warranty status (online).
  – Access *User Guide* and helpful articles.

  Notes:

  – The available features vary depending on the computer model.
  – Lenovo Vantage makes periodic updates of the features to keep improving your experience with your computer. The description of features might be different from that on your actual user interface.

Chapter 3. Using your computer

This chapter provides information to help you use the various features provided by your computer.

Registering your computer

When you register your computer with Lenovo, you enter required information into a Lenovo database. The information enables Lenovo to contact you when there is a recall or other severe problem and provide quicker service when you call Lenovo for help. In addition, some locations offer extended privileges and services to registered users.

To register your computer with Lenovo, go to https://support.lenovo.com/productregistration and follow the instructions on the screen.

Setting the computer volume

To set the computer volume, do the following:

1. Click the volume icon in the Windows notification area on the taskbar.

   Note: If the volume icon is not displayed in the Windows notification area, add the icon to the notification area. See the Windows help system.
2. Follow the instructions on the screen and the hover text to adjust the volume, mute the speaker, or unmute the speaker.

Using a disc

This section provides instructions on how to use a disc and the optical drive.

Guidelines about using the optical drive

When using the optical drive, follow these guidelines:

- Do not place the computer in a location where the drive is exposed to any of the following conditions:
  - High temperature
  - High humidity
  - Excessive dust
  - Excessive vibration or sudden shock
  - An inclined surface
  - Direct sunlight
- Do not insert any object other than a disc into the drive.
- Do not insert damaged discs into the drive. Warped, scratched, or dirty discs can damage the drive.
- Before moving the computer, remove the disc from the drive.

Handling and storing a disc

When handling and storing a disc, follow these guidelines:

- Hold the disc by its edges. Do not touch the surface of the side that is not labeled.

© Copyright Lenovo 2018, 2019

- To remove dust or fingerprints, wipe the disc with a clean, soft cloth from the center to the outside. Wiping the disc in a circular direction might cause loss of data.
- Do not write or stick paper on the disc.
- Do not scratch or mark the disc.
- Do not place or store the disc in direct sunlight.
- Do not use benzene, thinners, or other cleaners to clean the disc.
- Do not drop or bend the disc.

Playing and removing a disc

To play a disc, do the following:

1. With the computer on, press the eject/close button on the front of the optical drive. The tray slides out of the drive.
2. Insert a disc into the tray. Some optical drive has a snap hub in the center of the tray. If your drive has a snap hub, support the tray with one hand and then push the center of the disc until it snaps into place.
3. Press the eject/close button again or gently push the tray forward to close the tray. The disc player program starts automatically. For more information, refer to the help system of the disc player program.

To remove a disc from the optical drive, do the following:

1. With the computer on, press the eject/close button on the front of the optical drive. The tray slides out of the drive.
2. Carefully remove the disc from the tray.
3. Press the eject/close button again or gently push the tray forward to close the tray.

Note: If the tray does not slide out of the drive when you press the eject/close button, turn off your computer. Then, insert a straightened paper clip into the emergency-eject hole adjacent to the eject/close button. Use the emergency eject only in an emergency.

Recording a disc

If your optical drive supports recording, you can record a disc.

Recording a disc using Windows tools

To record a disc using Windows tools, do one of the following:

- Burn a disc using the AutoPlay window.
    1. Ensure that the disc is played automatically.
        a. Click the Start button to open the Start menu.
        b. Click **Settings → Devices → AutoPlay**.
        c. Select or turn on **Use AutoPlay for all media and devices**.
    2. Insert a recordable disc into the optical drive that supports recording. The AutoPlay window opens.
    3. Follow the instructions on the screen.
- Burn a disc using Windows Media® Player.
    1. Insert a recordable disc into the optical drive that supports recording.
    2. Open Windows Media Player. See “Accessing a program on your computer” on page 39.
    3. Follow the instructions on the screen.
- Burn a disc from an ISO file.

1. Insert a recordable disc into the optical drive that supports recording.
2. Double-click the ISO file.
3. Follow the instructions on the screen.

Recording a disc using preinstalled programs

To record a disc using preinstalled programs, do the following:

1. Insert a recordable disc into the optical drive that supports recording.
2. Open the PowerDVD Create, PowerProducer, or Power2Go program. See “Accessing a program on your computer” on page 39.
3. Follow the instructions on the screen.

Connecting to a network

This section provides instructions on how to connect to a network.

Connecting to an Ethernet LAN

You can connect your computer to an Ethernet LAN by connecting an Ethernet cable to the Ethernet connector.

DANGER

To avoid the risk of electrical shock, do not connect the telephone cable to the Ethernet connector.

Connecting to a wireless LAN

You can connect your computer to a wireless LAN without the use of an Ethernet cable but by means of radio waves only.

Note: The wireless LAN feature is available only on some models.

To establish a wireless-LAN connection, do the following:

1. Ensure that a wireless LAN is available and the wireless LAN feature on your computer is working.
2. Click the wireless-network-connection-status icon in the Windows notification area to display available wireless networks.

   Note: If the wireless-network-connection-status icon is not displayed in the Windows notification area, add the icon to the notification area. See the Windows help system.
3. Click a wireless LAN, and then click **Connect** to connect your computer to it. Provide required information if needed.

Connecting to a Bluetooth-enabled device

Bluetooth is a short-range wireless communications technology. Use Bluetooth to establish a wireless connection between your computer and another Bluetooth-enabled device within a distance of about 10 m (32.8 ft).

Note: The Bluetooth feature is available only on some models.

To connect to a Bluetooth-enabled device, do the following:

1. Turn on the Bluetooth feature of your computer. Ensure that the Bluetooth-enabled device is located within a distance of about 10 m (32.8 ft) from your computer.

2. Click the Bluetooth icon in the Windows notification area on the taskbar. Then, click **Add a Device** and follow the instructions on the screen.

   Note: If the Bluetooth icon is not displayed in the Windows notification area, add the icon to the notification area. See the Windows help system.

Chapter 4. You and your computer

This chapter provides information about accessibility, ergonomic, and cleaning and maintenance.

Arranging your workspace

Arrange your workspace to suit your needs and the kind of work you do. This section provides information about the factors that affect the way you arrange your workspace.

Glare and lighting

Position the monitor to minimize glare and reflections from overhead lights, windows, and other light sources. Reflected light from shiny surfaces can cause annoying reflections on your screen. When possible, place the monitor at right angles to windows and other light sources. If necessary, reduce overhead lighting by turning off lights or using lower wattage bulbs. If you install the monitor near a window, use curtains or blinds to block the sunlight. You can adjust the brightness and contrast controls on the monitor as the room lighting changes throughout the day.

Where it is impossible to avoid reflections or to adjust the lighting, an antiglare filter placed over the screen might be helpful. However, these filters might affect the clarity of the image on the screen; try them only after you have exhausted other methods of reducing glare.

Air circulation

Your computer produces heat. The computer has a fan that pulls in fresh air and forces out hot air through the air vents. Blocking the air vents can cause overheating, which might result in a malfunction or damage. Position the computer so that nothing blocks the air vents; usually, 51 mm (2 inches) of air space is sufficient. Ensure that the vented air is not blowing on people.

Electrical outlet locations and cable lengths

The following factors might determine the final placement of your computer:

- Locations of electrical outlets
- Length of power cords or power adapters
- Length of the cables that are connected to other devices

For more information about power cords or power adapters, see “Power cords and power adapters” on page 1.

Comfort

Although no single working position is ideal for everyone, here are a few guidelines to help you find a position that suits you best. The following figure sets an example for your reference.

© Copyright Lenovo 2018, 2019



- Screen position: Keep the screen at a comfortable viewing distance, usually 51–61 cm (20–24 inches). Then, adjust the screen so that the top of the screen is at or slightly below eye level and you can view it without twisting your body.
- Chair position: Use a chair that gives you good back support and seat height adjustment. Use chair adjustments to best suit your desired posture.
- Head position: Keep your head and neck in a comfortable and neutral (vertical or upright) position.
- Arm and hand positions: Keep your forearms, wrists, and hands in a relaxed and neutral (horizontal) position. Type with a soft touch without pounding the keys.
- Leg position: Keep your thighs parallel to the floor and your feet flat on the floor or on a footrest.

Make minor modifications in your working posture to deter the onset of discomfort caused by long periods of working in the same position. Frequent short breaks from your work also help to prevent minor discomfort associated with your working posture.

Accessibility information

Lenovo is committed to providing users who have hearing, vision, and mobility limitations with greater access to information and technology. This section provides information about the ways these users can get the most out of their computer experience. You also can get the most up-to-date accessibility information from the following Web site:
https://www.lenovo.com/accessibility

Keyboard shortcuts

The following list contains keyboard shortcuts that can help make your computer easier to use.

Note: Depending on your keyboard, some of the following keyboard shortcuts might not be available.

- **Windows logo key + U**: Open Ease of Access Center
- **Right Shift for eight seconds**: Turn on or turn off Filter Keys
- **Shift five times**: Turn on or turn off Sticky Keys
- **Num Lock for five seconds**: Turn on or turn off Toggle Keys
- **Left Alt+Left Shift+Num Lock**: Turn on or turn off Mouse Keys
- **Left Alt+Left Shift+PrtScn (or PrtSc)**: Turn on or turn off High Contrast

For more information, go to https://windows.microsoft.com/, and then search using any of the following keywords: `keyboard shortcuts`, `key combinations`, `shortcut keys`.

Ease of Access Center

Ease of Access Center on the Windows operating system enables you to configure your computer to suit your physical and cognitive needs.

To use Ease of Access Center, do the following:

1. Click the Start button to open the Start menu.
2. Click **Settings → Ease of Access**.
3. Choose the appropriate tool by following the instructions on the screen.

Ease of Access Center mainly includes the following tools:

- Magnifier

  Magnifier is a useful utility that enlarges the entire screen or part of the screen so that you can see the items better.
- Narrator

  Narrator is a screen reader that reads aloud what is displayed on the screen and describes events such as error messages.
- On-Screen Keyboard

  To input data into your computer using a mouse, joystick, or other pointing devices instead of a physical keyboard, you can use On-Screen Keyboard.
- High Contrast

  High Contrast is a feature that heightens the color contrast of some text and images on your screen. As a result, those items are more distinct and easier to identify.
- Personalized keyboard

  Adjust keyboard settings to make your keyboard easier to use. For example, you can use your keyboard to control the pointer and type certain key combinations easier.
- Personalized mouse

  Adjust mouse settings to make your mouse easier to use. For example, you can change the pointer appearance and make it easier to manage windows with the mouse.

Speech Recognition

Speech Recognition enables you to control your computer by voice.

Using only your voice, you can start programs, open menus, click objects on the screen, dictate text into documents, and write and send e-mails. Everything you do with the keyboard and mouse can be done with only your voice.

To use Speech Recognition, do the following:

1. Click the Start button to open the Start menu.
2. Click **Windows System → Control Panel**.
3. View Control Panel by Large icons or Small icons, and then click **Speech Recognition**.
4. Follow the instructions on the screen.

Screen-reader technologies

Screen-reader technologies are primarily focused on software program interfaces, help information systems, and various online documents. For additional information about screen readers, see the following:

- Using PDFs with screen readers:
  https://www.adobe.com/accessibility.html?promoid=DJGVE
- Using the JAWS screen reader:
  https://www.freedomscientific.com/Products/Blindness/JAWS
- Using the NVDA screen reader:

https://www.nvaccess.org/

Screen resolution

You can make the text and images on your screen easier to read by adjusting the screen resolution of your computer.

To adjust the screen resolution, do the following:

1. Right-click a blank area on the desktop.
2. Click **Display settings → Display**.
3. Follow the instructions on the screen.

Note: Setting the resolution too low might prevent some items from fitting on the screen.

Customizable item size

You can make the items on your screen easier to read by changing the item size.

- To change the item size temporarily, use the Magnifier tool in Ease of Access Center.
- To change the item size permanently, do the following:
  - Change the size of all the items on your screen. Do the following:
    1. Right-click a blank area on the desktop.
    2. Click **Display settings → Display**.
    3. Follow the on-screen instructions to change the item size. For some applications, your configuration might not take effect until you sign out and then sign in again.
  - Change the size of the items on a Web page.

    Press and hold Ctrl, and then press the plus-sign key (+) to enlarge or the minus-sign key (-) to reduce the text size.
  - Change the size of the items on the desktop or a window.

    Note: This function might not work on some windows.

    If your mouse has a wheel, press and hold Ctrl, and then scroll the wheel to change the item size.

Industry-standard connectors

Your computer provides industry-standard connectors that enable you to connect assistive devices.

For more information about the location and function of each connector, see “Hardware locations” on page 29.

TTY/TDD conversion modem

Your computer supports the use of a text telephone (TTY) or the telecommunications device for the deaf (TDD) conversion modem. The modem must be connected between your computer and a TTY/TDD telephone. Then, you can type a message on your computer and send it to the telephone.

Documentation in accessible formats

Lenovo provides electronic documentation in accessible formats, such as properly tagged PDF files or HyperText Markup Language (HTML) files. Lenovo electronic documentation is developed to ensure that visually impaired users can read the documentation through a screen reader. Each image in the documentation also includes adequate alternative text so that visually impaired users can understand the image when they use a screen reader.

Cleaning your computer

Attention: Do not open your computer or attempt any repair before reading and understanding the Chapter 1 “Read this first: Important safety information” on page 1. Properly remove or install your computer cover. See Chapter 9 “Hardware removal and installation” on page 81.

CAUTION:
Remove any media from the drives and turn off all connected devices and the computer. Then, disconnect all power cords from electrical outlets and disconnect all cables that are connected to the computer.

It is a good practice to clean your computer periodically to protect the surfaces and ensure trouble-free operation. Use only mild cleaning solutions and a damp cloth to clean the painted surfaces of the computer.

Dust buildup compounds problems associated with glare, so remember to clean the screen periodically. Wipe the screen surface gently with a soft, dry cloth, or blow on the screen to remove grit and other loose particles. Depending on the type of the screen, moisten a soft, lint-free cloth with an LCD cleaner or liquid glass cleaner and then wipe the screen surface.

Maintenance

With appropriate care and maintenance, your computer will serve you reliably. This section provides instructions on how to maintain your computer so that it can keep working in better condition.

Basic maintenance tips

Here are some basic points about keeping your computer functioning properly:

- Keep your computer in a clean, dry environment. Ensure that the computer rests on a flat, steady surface.
- Do not cover any of air vents. These air vents provide airflow to keep your computer from overheating.
- Keep food and drinks away from all parts of your computer. Food particles and spills might make the keyboard and mouse stick and unusable.
- Do not get the power switches or other controls wet. Moisture can damage these parts and cause an electrical hazard.
- Always disconnect a power cord by grasping the plug instead of the cord.

Good maintenance practices

By performing a few good maintenance practices, you can maintain good computer performance, protect your data, and be prepared in case of a computer failure.

- Empty your recycle bin on a regular basis.
- Use the disk defragmentation or disk optimization feature of your operating system occasionally to prevent performance problems caused by an excessive number of fragmented files.
- Clean out your Inbox, Sent Items, and Deleted Items folders in your e-mail application on a regular basis.
- Back up critical data regularly on removable media memory, such as discs and USB storage devices, and store the removable media in a safe location. The frequency of making backup copies depends on how critical the data is to you or your business.
- Back up your data on the storage drive regularly. See “Recovery information” on page 72.
- Keep your computer software, device drivers, and operating system up-to-date. See “Keeping your computer current” on page 50.

- Keep a log book. Entries might include major software or hardware changes, device-driver updates, intermittent problems and what you did to resolve them, and other issues you might have experienced. The cause of a problem might be change in hardware, change in software, or any other actions that might have taken place. A log book can help you or a Lenovo technician determines the cause of a problem.
- Create Product Recovery discs. See “Recovery information” on page 72 for more information about using Product Recovery discs to restore the hard disk drive to the factory-default settings.

Keeping your computer current

In most cases, it is a good practice to have the most up-to-date operating system update patches, software programs, and device drivers. This section provides instructions on how to get the latest updates for your computer.

Getting the latest system updates

To get the latest system updates for your computer, ensure that your computer is connected to the Internet and do one of the following:

- Open Lenovo Vantage to check the available update packages. If the latest update package is available, follow the on-screen instructions to download and install the package.

  To open the Lenovo Vantage program, see “Accessing a program on your computer” on page 39.
- Use Windows Update to get the system updates, such as security fixes, new versions of Windows components, and device driver updates.
  1. Click the Start button to open the Start menu.
  2. Click **Settings → Update & Security → Windows Update**.
  3. Follow the instructions on the screen.

Note: The device drivers provided by Windows Update might not be tested by Lenovo. It is recommended that you get device drivers by using Lenovo programs or from the Lenovo Web site at https://support.lenovo.com.

Moving your computer

Before moving your computer, take the following precautions:

1. Back up your data on the storage drive. See “Good maintenance practices” on page 49.
2. Remove any media from the drives and turn off all connected devices and the computer. Then, disconnect all power cords from electrical outlets and disconnect all cables that are connected to the computer.
3. If you saved the original shipping cartons and packing materials, use them to pack the units. If you are using different cartons, cushion the units to avoid damage.

Moving your computer to another country or region

When you move your computer to another country or region, you must take local electrical standards into consideration. If the local electrical outlet style is different from the type you are using, use either an electrical plug adapter or a new power cord. To purchase such items, contact the Lenovo Customer Support Center. For a list of Lenovo Support phone numbers, go to https://pcsupport.lenovo.com/supportphonelist. If you cannot find the support telephone number for your country or region, contact your Lenovo reseller.

Chapter 5. Security

This chapter provides information about how to protect your computer from unauthorized use.

Tips on using the computer

This section provides tips on using the computer.

Attaching a Kensington-style cable lock

You can use a Kensington-style cable lock to secure your computer to a desk, table, or other non-permanent fixture. The cable lock attaches to the security-lock slot at the rear of your computer. Depending on the type selected, the cable lock can be operated with a key or combination. The cable lock also locks the buttons used to open the computer cover. This is the same type of lock used with many notebook computers. You can order such a cable lock directly from Lenovo by searching for *Kensington* at: https://support.lenovo.com

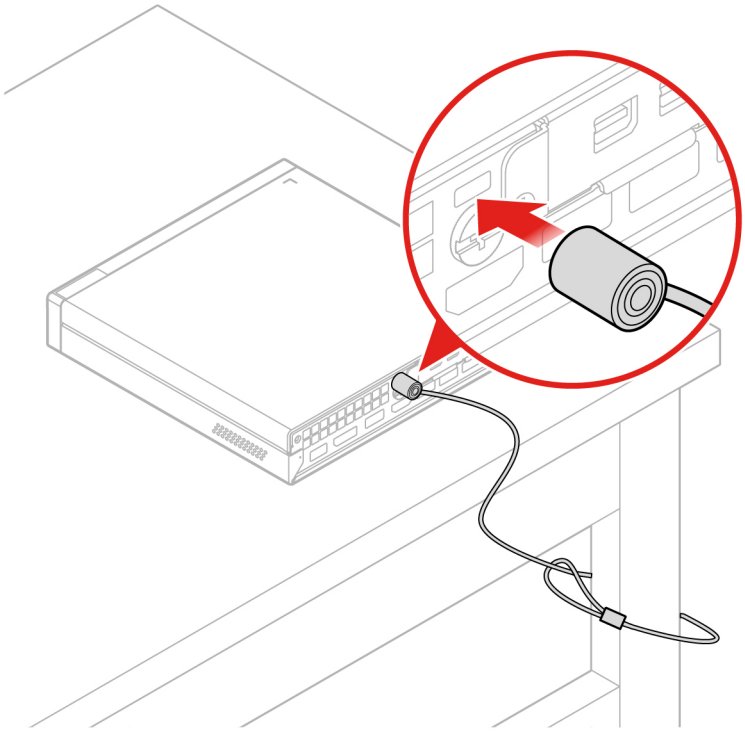

Figure 6. Kensington-style cable lock

Installing the computer into the TIO monitor

1. For the Tiny-in-One 23 monitor (MT: 10DQ), remove the rear Wi-Fi antenna cover before installing the computer.
2. Connect the computer either to the power adapter shipped with the TIO monitor or to the adapter shipped with the computer that has higher power rating.

© Copyright Lenovo 2018, 2019

Viewing and changing security settings in the Setup Utility program

To view and change security settings in the Setup Utility program, do the following:

1. Start the Setup Utility program. See “Starting the Setup Utility program” on page 55.
2. Select **Security**.
3. Follow the instructions on the right side of the screen to view and change security settings. You can refer to “Using the Setup Utility program” on page 55 to get basic information about some major security settings.
4. To save settings and exit the Setup Utility program, press F10 or Fn+F10 (depending on the keyboard settings). Then, select **Yes** in the window displayed, and press Enter.

Using passwords and Windows accounts

You can use BIOS passwords and Windows accounts to prevent unauthorized access to your computer and data. To use the BIOS passwords or the Windows accounts, do the following:

- To use BIOS passwords, see “Using BIOS passwords” on page 58.
- To use Windows accounts, do the following:
  1. Click the Start button to open the Start menu.
  2. Click **Settings → Accounts**.
  3. Follow the instructions on the screen.

Using the cover presence switch

The cover presence switch prevents your computer from logging in to the operating system when the computer cover is not properly installed or closed.

To use the cover presence switch, enable the cover-presence-switch connector on the system board first. To achieve this, do the following:

1. Start the Setup Utility program. See “Starting the Setup Utility program” on page 55.
2. Select **Security → Chassis Intrusion Detection** and press Enter.
3. Select **Enabled** and press Enter.
4. To save settings and exit the Setup Utility program, press F10 or Fn+F10 (depending on the keyboard settings), select **Yes** in the window displayed, and press Enter. The cover-presence-switch connector on the system board is enabled.

The cover presence switch starts functioning. If the switch detects that the computer cover is not correctly installed or closed, an error message is displayed when you turn on the computer. To fix the error and log in to the operating system, do the following:

1. Properly remove or install your computer cover. See Chapter 9 “Hardware removal and installation” on page 81.
2. Start and then exit the Setup Utility program. See “Starting the Setup Utility program” on page 55 and “Exiting the Setup Utility program” on page 60.

Using firewalls

A firewall can be hardware, software, or a combination of both depending on the level of security required. Firewalls work on a set of rules to determine which inbound and outbound connections are authorized. If your computer is preinstalled with a firewall program, it helps protect against computer Internet security

threats, unauthorized access, intrusions, and Internet attacks. It also protects your privacy. For more information about how to use the firewall program, refer to the help system of your firewall program.

To use Windows Firewall, do the following:

1. Click the Start button to open the Start menu.
2. Click **Windows System → Control Panel**.
3. View Control Panel by Large icons or Small icons, and then click **Windows Defender Firewall**.
4. Follow the instructions on the screen.

Protecting data against viruses

Your computer is preinstalled with an antivirus program to help you guard against, detect, and eliminate viruses.

Lenovo provides a full version of antivirus software on your computer with a free 30-day subscription. After 30 days, you must renew the license to continue receiving the antivirus software updates.

Note: Virus definition files must be kept up-to-date to guard against new viruses.

For more information about how to use your antivirus software, refer to the help system of your antivirus software.

Using the Smart USB Protection function

The Smart USB Protection function is a security function that helps prevent data from being copied from the computer to USB storage devices connected to the computer. You can set the Smart USB Protection function to one of the following modes:

- **Disabled** (default setting): You can use the USB storage devices without limitation.
- **Read Only**: You cannot copy data from the computer to the USB storage devices. However, you can access or modify data on the USB storage devices.
- **No Access**: You cannot access the USB storage devices from the computer.

To configure the Smart USB Protection function, do the following:

1. Start the Setup Utility program. See “Starting the Setup Utility program” on page 55.
2. Select **Security → Smart USB Protection** and press Enter.
3. Select the desired setting and press Enter.
4. To save settings and exit the Setup Utility program, press F10 or Fn+F10 (depending on the keyboard settings). Then, select **Yes** in the window displayed, and press Enter.

Computrace Agent software embedded in firmware

The Computrace Agent software is an IT asset management and computer theft recovery solution. The software detects if changes have been made on the computer, such as hardware, software, or the computer call-in location. You might have to purchase a subscription to activate the Computrace Agent software.

Trusted Platform Module (TPM)

TPM is a secure cryptoprocessor that stores cryptographic keys, which in turn protects information stored in your computer.

Chapter 6. Advanced configuration

This chapter provides information to help you further configure the computer.

Using the Setup Utility program

The Setup Utility program is used to view and change the configuration settings of your computer. This section provides information about only the major configuration settings available in the program.

Note: The operating system settings might override any similar settings in the Setup Utility program.

Starting the Setup Utility program

To start the Setup Utility program, do the following:

1. Turn on or restart your computer.
2. Before the operating system starts up, repeatedly press and release F1 or Fn+F1 (depending on the keyboard settings). Based on the Setup Utility display mode setting, one of the following situations occurs:
   - Text mode: The Setup Utility program opens.
   - Graphic mode (available on some models): The start screen is displayed. Then, select **Setup** and press Enter to open the Setup Utility program.

   Note: If a BIOS password has been set, the Setup Utility program will not open until you enter the correct password. For more information, see “Using BIOS passwords” on page 58.

To view and change the configuration settings, follow the instructions on the screen.

Changing the display language of the Setup Utility program

The Setup Utility program supports three display languages: English, French, and simplified Chinese.

To change the display language of the Setup Utility program, do the following:

1. Start the Setup Utility program. See “Starting the Setup Utility program” on page 55.
2. From the main interface, locate **System Language** and press Enter.
3. Select the display language according to your needs.

Enabling or disabling a device

This section provides information about how to enable or disable user access to hardware devices (such as USB connectors or storage drives).

To enable or disable a device, do the following:

1. Start the Setup Utility program. See “Starting the Setup Utility program” on page 55.
2. Select **Devices**.
3. Select the device you want to enable or disable and press Enter.
4. Select the desired setting and press Enter.
5. To save settings and exit the Setup Utility program, press F10 or Fn+F10 (depending on the keyboard settings). Then, select **Yes** in the window displayed, and press Enter.

© Copyright Lenovo 2018, 2019

Enabling or disabling the automatic power-on of your computer

The Automatic Power On item in the Setup Utility program provides various options for you to make your computer start up automatically.

To enable or disable the Automatic Power On features, do the following:

1. Start the Setup Utility program. See “Starting the Setup Utility program” on page 55.
2. Select **Power → Automatic Power On** and press Enter.
3. Select the feature you want to enable or disable and press Enter.
4. Select the desired setting and press Enter.
5. To save settings and exit the Setup Utility program, press F10 or Fn+F10 (depending on the keyboard settings). Then, select **Yes** in the window displayed, and press Enter.

Enabling or disabling the ErP LPS compliance mode

Lenovo computers meet the eco-design requirements of the ErP Lot 3 regulation. For more information, go to:
https://www.lenovo.com/ecodeclaration

You can enable the ErP LPS compliance mode in the Setup Utility program to reduce the consumption of electricity when your computer is off or in sleep mode.

To enable or disable the ErP LPS compliance mode, do the following:

1. Start the Setup Utility program. See “Starting the Setup Utility program” on page 55.
2. Select **Power → Enhanced Power Saving Mode** and press Enter.
3. Select **Enabled** or **Disabled** depending on your needs, and then press Enter. If you select **Enabled**, you also need to disable the Wake on LAN feature. See “Enabling or disabling the automatic power-on of your computer” on page 56.
4. To save settings and exit the Setup Utility program, press F10 or Fn+F10 (depending on the keyboard settings). Then, select **Yes** in the window displayed, and press Enter.

When the ErP LPS compliance mode is enabled, you can wake up your computer by doing one of the following:

- Press the power button.
- Enable the Wake Up on Alarm feature to make your computer wake up at a set time. See “Enabling or disabling the automatic power-on of your computer” on page 56.
- Enable the After Power Loss feature to make your computer wake up when the power supply resumes after a sudden loss of electricity.

  To enable the After Power Loss feature, do the following:

  1. Start the Setup Utility program. See “Starting the Setup Utility program” on page 55.
  2. Select **Power → After Power Loss** and press Enter.
  3. Select **Power On** and press Enter.
  4. To save settings and exit the Setup Utility program, press F10 or Fn+F10 (depending on the keyboard settings). Then, select **Yes** in the window displayed, and press Enter.

Switching between better acoustic and better thermal performance

You can adjust the acoustic and thermal performance of your computer through the **ICE Performance Mode** menu. Two choices are available:

- **Better Acoustic Performance** (default setting): This computer works with less noise at a normal thermal level.
- **Better Thermal Performance**: The computer works at a better thermal level with normal acoustic performance.

To switch between better acoustic performance and better thermal performance, do the following:

1. Start the Setup Utility program. See “Starting the Setup Utility program” on page 55.
2. Select **Power → Intelligent Cooling Engine (ICE)** and press Enter.
3. Select **ICE Performance Mode** and press Enter.
4. Select **Better Acoustic Performance** or **Better Thermal Performance** as desired and press Enter.
5. To save settings and exit the Setup Utility program, press F10 or Fn+F10 (depending on the keyboard settings). Then, select **Yes** in the window displayed, and press Enter.

Enabling or disabling the system to record thermal alert logs

When the ICE thermal alert feature is enabled, if a critical thermal situation occurs, an alert log is written into the Windows system log. The alert log can help you identify thermal problems, such as malfunctioning fans, abnormally high temperature, or poor cooling performances.

To enable or disable the system to record thermal alert logs, do the following:

1. Start the Setup Utility program. See “Starting the Setup Utility program” on page 55.
2. Select **Power → Intelligent Cooling Engine (ICE)** and press Enter.
3. Select **ICE Thermal Alert** and press Enter.
4. Select the desired setting and press Enter.
5. To save settings and exit the Setup Utility program, press F10 or Fn+F10 (depending on the keyboard settings). Then, select **Yes** in the window displayed, and press Enter.

Enabling or disabling the configuration change detection

With the configuration-change detection enabled, if the POST detects configuration changes of some hardware devices (such as storage drives or memory modules), an error message is displayed.

To enable or disable the configuration change detection, do the following:

1. Start the Setup Utility program. See “Starting the Setup Utility program” on page 55.
2. Select **Security → Configuration Change Detection** and press Enter.
3. Select the desired setting and press Enter.
4. To save settings and exit the Setup Utility program, press F10 or Fn+F10 (depending on the keyboard settings). Then, select **Yes** in the window displayed, and press Enter.

To bypass the error message and log in to the operating system, do one of the following:

- Press F2 or Fn+F2 (depending on the keyboard settings).
- Start and then exit the Setup Utility program. See “Starting the Setup Utility program” on page 55 and “Exiting the Setup Utility program” on page 60.

Changing the BIOS settings before installing a new operating system

BIOS settings vary by operating system. Change the BIOS settings before installing a new operating system.

To change the BIOS settings, do the following:

1. Start the Setup Utility program. See “Starting the Setup Utility program” on page 55.
2. From the main interface, select **Exit → OS Optimized Defaults** and press Enter.
3. Depending on the operating system to be installed, do one of the following:
   - To install the Windows 10 (64-bit) operating system, select **Enabled** and press Enter.
   - To install an operating system other than Windows 10 (64-bit), select **Disabled** and press Enter.
4. Select **Yes** in the window displayed and press Enter to confirm your selection.
5. To save settings and exit the Setup Utility program, press F10 or Fn+F10 (depending on the keyboard settings). Then, select **Yes** in the window displayed, and press Enter.

Using BIOS passwords

By using the Setup Utility program, you can set passwords to prevent unauthorized access to your computer and data.

You do not have to set any passwords to use your computer. However, using passwords improves computer security. If you decide to set any passwords, read the following topics.

Password types

The following types of passwords are available in the Setup Utility program:

- Power-on password

  When a power-on password is set, you are prompted to enter a valid password each time the computer is turned on. The computer cannot be used until the valid password is entered.

- Administrator password

  Setting an administrator password deters unauthorized users from changing configuration settings. If you are responsible for maintaining the configuration settings of several computers, you might want to set an administrator password.

  When an administrator password is set, you are prompted to enter a valid password each time you try to access the Setup Utility program. The Setup Utility program cannot be accessed until a valid password is entered.

  If both the power-on password and administrator password are set, you can enter either password. However, you must use your administrator password to change any configuration settings.

- Hard disk password

  Setting a hard disk password prevents unauthorized access to the data on the internal storage drive (such as a hard disk drive). When a hard disk password is set, you are prompted to enter a valid password each time you try to access the storage drive.

  Notes:

  – Even if the storage drive is removed from one computer and installed in another, the hard-disk password is still valid.

  – If the hard disk password is forgotten, there is no way to reset the password or recover data from the storage drive.

Password considerations

A password can be any combination of up to 64 alphabetic and numeric characters. For security reasons, it is recommended to use a strong password that cannot be easily compromised.

Note: The Setup Utility program passwords are case-sensitive.

To set a strong password, consider the following guidelines:

- Have at least eight characters in length
- Contain at least one alphabetic character and one numeric character
- Not be your name or your user name
- Not be a common word or a common name
- Be significantly different from your previous passwords

Setting, changing, or deleting a password

To set, change, or delete a password, do the following:

1. Start the Setup Utility program. See “Starting the Setup Utility program” on page 55.
2. Select **Security**.
3. Depending on the password type, select **Set Power-On Password**, **Set Administrator Password**, or **Hard Disk Password** and press Enter.
4. Follow the instructions on the right side of the screen to set, change, or delete a password.

   Note: A password can be any combination of up to 64 alphabetic and numeric characters. For more information, see “Password considerations” on page 58.
5. To save settings and exit the Setup Utility program, press F10 or Fn+F10 (depending on the keyboard settings). Then, select **Yes** in the window displayed, and press Enter.

Erasing lost or forgotten passwords (clearing CMOS)

This section provides instructions on how to erase lost or forgotten passwords, such as a user password.

Note: The instructions in this section do not apply to the hard disk password.

To erase a lost or forgotten password, do the following:

1. Remove any media from the drives and turn off all connected devices and the computer. Then, disconnect all power cords from electrical outlets and disconnect all cables that are connected to the computer.
2. Remove the computer cover. See Chapter 9 “Hardware removal and installation” on page 81.
3. Locate the Clear Complementary Metal Oxide Semiconductor (CMOS) /Recovery jumper on the system board. See “Hardware locations” on page 29.
4. Move the jumper from the standard position (pin 5 and pin 6) to the maintenance position (pin 2 and pin 4).
5. Reinstall the computer cover and connect the power cord. See Chapter 9 “Hardware removal and installation” on page 81.
6. Turn on the computer and leave it on for approximately 10 seconds. Then, turn off the computer by holding the power button for approximately five seconds.
7. Repeat step 1 and step 2.
8. Move the Clear CMOS /Recovery jumper back to the standard position (pin 5 and pin 6).
9. Reinstall the computer cover and connect the power cord.

Selecting a startup device

If your computer does not start up from the expected device, you can either change the startup device sequence or select a temporary startup device.

Changing the startup device sequence permanently

To change the startup device sequence permanently, do the following:

1. Depending on the type of the storage device, do one of the following:
   - If the storage device is internal, go to step 2.
   - If the storage device is a disc, ensure that your computer is turned on. Then, insert the disc into the optical drive.
   - If the storage device is an external device other than a disc, connect the storage device to the computer.
2. Start the Setup Utility program. See “Starting the Setup Utility program” on page 55.
3. Select **Startup**.
4. Follow the instructions on the right side of the screen to change the startup device sequence.
5. To save settings and exit the Setup Utility program, press F10 or Fn+F10 (depending on the keyboard settings). Then, select **Yes** in the window displayed, and press Enter.

Selecting a temporary startup device

Note: Not all discs and storage drives are bootable.

To select a temporary startup device, do the following:

1. Depending on the type of the storage device, do one of the following:
   - If the storage device is internal, go to step 2.
   - If the storage device is a disc, ensure that your computer is turned on. Then, insert the disc into the optical drive.
   - If the storage device is an external device other than a disc, connect the storage device to the computer.
2. Turn on or restart the computer. Before Windows starts up, repeatedly press and release F12 or Fn+F12 (depending on the keyboard settings) until Startup Device Menu is displayed.
3. Select the desired storage device and press Enter. The computer then starts up from the device you select.

If you want to select a permanent startup device, select **Enter Setup** on Startup Device Menu and press Enter to start the Setup Utility program. For more information about how to select a permanent startup device, see “Changing the startup device sequence permanently” on page 59.

Exiting the Setup Utility program

To exit the Setup Utility program, do one of the following:

- If you want to save the new settings, press F10 or Fn+F10 (depending on the keyboard settings). Then, select **Yes** in the window displayed and press Enter.
- If you do not want to save the new settings, select **Exit → Discard Changes and Exit** and press Enter. Then, select **Yes** in the window displayed and press Enter.

Updating and recovering the BIOS

The BIOS is the first program that the computer runs when you turn on the computer. The BIOS initializes the hardware components and loads the operating system and other programs.

BIOS level

An incorrect BIOS level can cause false errors and unnecessary FRU replacement. Use the following information to determine the currently installed BIOS level, the latest BIOS level available, and where to obtain the latest BIOS level.

- To determine the currently installed BIOS level, start the Setup Utility program and view the **BIOS Revision Level** on the Main page.
- Sources for obtaining the latest BIOS level available
  - Lenovo support Web site: http://www.lenovo.com/support
  - Lenovo Customer Support Center
  - Levels 1 and 2 Support

Note: BIOS settings vary by operating system. Change the BIOS settings before installing a new operating system. See “Changing the BIOS settings before installing a new operating system” on page 57.

Updating the BIOS

When you install a new program, hardware device, or device driver, you might be informed to update the BIOS. You can update the BIOS from your operating system or a flash update disc (available only on some models).

To update the BIOS, do the following:

1. Go to https://support.lenovo.com.
2. To update the BIOS from your operating system, download the flash BIOS update driver according to your operating system version. To update the BIOS from a flash update disc, download the ISO image version (used to create a flash update disc). Then, download the installation instructions for the flash BIOS update driver.
3. Print the installation instructions you download and follow the instructions to update the BIOS.

   Note: If you want to update the BIOS from a flash update disc, the installation instructions might not provide the instructions on how to record the update disc. See “Recording a disc” on page 42.

Recovering from a BIOS update failure

To recover from a BIOS update failure, do the following:

1. Remove any media from the drives and turn off all connected devices and the computer. Then, disconnect all power cords from electrical outlets and disconnect all cables that are connected to the computer.
2. Remove the computer cover. See Chapter 9 “Hardware removal and installation” on page 81.
3. Locate the Clear CMOS /Recovery jumper on the system board. See “Hardware locations” on page 29.
4. Remove any parts and cables that impede your access to the Clear CMOS /Recovery jumper.
5. Move the jumper from the standard position (pin 5 and pin 6) to the maintenance position (pin 2 and pin 4).
6. Reinstall the parts and cables that were removed.
7. Reinstall the computer cover and reconnect any cables that were disconnected. See Chapter 9 “Hardware removal and installation” on page 81.
8. Turn on the computer and insert the BIOS update disc into the optical drive. Wait a few minutes. The recovery process begins. After the recovery process is completed, your computer will shut down automatically.

   Note: If the computer does not start up from the disc, select the disc as the startup device. See “Selecting a temporary startup device” on page 60.
9. Repeat steps 1–4.
10. Move the Clear CMOS /Recovery jumper back to the standard position (pin 5 and pin 6).
11. Repeat step 6 and step 7.
12. Turn on your computer and the monitor. When the logo screen is displayed, press F1 or Fn+F1.

13. To prevent data loss, ensure that BIOS settings are restored to an earlier point.

Chapter 7. Troubleshooting, diagnostics, and recovery

This chapter provides solutions to resolve your computer problems. Follow the steps in the basic procedure for resolving computer problems, which helps you make good use of the troubleshooting, diagnostics, and recovery information.

Basic procedure for resolving computer problems

It is recommended that you use the following procedure to resolve computer problems you are experiencing:

1. Ensure that:
   a. The cables for all connected devices are connected correctly and securely.
   b. All connected devices that require ac power are connected to properly grounded, functioning electrical outlets.
   c. All connected devices are enabled in the BIOS settings of your computer. See “Enabling or disabling a device” on page 55.

   If these actions do not resolve your problem, continue with the next step.
2. Use an antivirus program to see if your computer has been infected by a virus. If the program detects a virus, remove the virus. If the antivirus program does not resolve your problem, continue with the next step.
3. Go to “Troubleshooting” on page 63 and follow the instructions for the type of problem you are experiencing. If these troubleshooting instructions do not resolve your problem, continue with the next step.
4. Run the diagnostic program. See “Diagnosing problems” on page 71. If the diagnostic program does not resolve your problem, continue with the next step.
5. Recover your operating system. See “Recovery information” on page 72.
6. If none of these actions solve your problem, contact the Lenovo Customer Support Center. For a list of Lenovo Support phone numbers, go to https://pcsupport.lenovo.com/supportphonelist. For more information about help, service, and technical assistance, see Chapter 10 “Getting information, help, and service” on page 135.

Troubleshooting

Attention: Do not open your computer or attempt any repair before reading and understanding the Chapter 1 “Read this first: Important safety information” on page 1.

Use the troubleshooting information to find solutions to problems that have definite symptoms.

Startup problems

The computer does not start up when you press the power button.

Solutions:

Ensure that:

- The power cord is correctly connected to the rear of the computer and to a working electrical outlet.
- If your computer has a secondary power switch on the rear of the computer, ensure that it is switched on.
- The power indicator on the front of the computer is on.

© Copyright Lenovo 2018, 2019

- The computer voltage matches the voltage available at the electrical outlet for your country or region.

The operating system fails to start up.

Solution:

Ensure that the startup device sequence set in the Setup Utility program includes the device where the operating system resides. Usually, the operating system is on the internal storage drive. For more information, see “Changing the startup device sequence permanently” on page 59.

The computer beeps multiple times before the operating system starts up.

Solution:

Ensure that no keys are stuck.

Audio problems

The audio cannot be heard on the Windows operating system.

Solutions:

- If you are using powered external speakers that have an On/Off control, ensure that:
  - The On/Off control is set to the **On** position.
  - The speaker power cable is connected to a properly grounded, functional ac electrical outlet.
- If your external speakers have a volume control, ensure that the volume is not set too low.
- Click the volume icon in the Windows notification area on the taskbar. Ensure that the mute speakers settings are not selected and none of the volume settings is set too low.

  Note: If the volume icon is not displayed in the Windows notification area, add the icon to the notification area. See the Windows help system.
- For some computers that have a front audio panel, ensure that the volume is not set too low.
- Ensure that your external speakers (and headphones, if used) are connected to the correct audio connectors on the computer. Most speaker cables are color-coded to match the connectors.

  Note: When external-speaker or headphone cables are connected to the audio connectors, the internal speaker, if present, is disabled. In most cases, if an audio adapter is installed in one of the expansion slots, the audio function built into the system board is disabled. Therefore, you must use the audio connectors on the audio adapter.
- Ensure that the program you are running is designed for use on the Windows operating system. If the program is designed to run in DOS, the program does not use the Windows sound feature. The program must be configured to use Sound Blaster Pro or Sound Blaster emulation.
- Ensure that the audio device drivers are correctly installed.

The sound comes from one of the external speakers.

Solutions:

- Ensure that the speaker cable is inserted completely into the connector on the computer.
- Right-click the volume icon in the Windows notification area on the taskbar. Then, click **Open Volume Mixer** and select the desired speaker. Click the **Levels** tab and ensure that the Balance settings are set correctly.

  Note: If the volume icon is not displayed in the Windows notification area, add the icon to the notification area. See the Windows help system.

CD or DVD problems

A CD or DVD does not work.

Solutions:

- Ensure that the power cable and signal cable are securely connected to the drive.
- Ensure that the disc is inserted correctly, with its label up.
- Ensure that the disc you are using is clean. To remove dust or fingerprints, wipe the disc clean with a soft cloth from the center to the outside. Wiping a disc in a circular motion might cause loss of data.
- Ensure that the disc you are using is not scratched or damaged. Try inserting another disc that you know is good. If you cannot read from a known-good disc, you might have a problem with your optical drive or the cabling to your optical drive.
- If you have multiple CD or DVD drives installed (or a combination of CD and DVD drives), try inserting the disc into the other drive. In some cases, only one of the drives is connected to the audio subsystem.

A bootable recovery medium, such as the Product Recovery CD, cannot be used to start your computer.

Solution:

Ensure that the CD or DVD drive is set as the top priority of the Boot Priority Order in the Setup Utility program. Refer to “Selecting a temporary startup device” on page 60 for information about viewing and changing the startup sequence.

Note: On some computer models, the startup sequence is permanently set and cannot be changed.

A black screen is displayed instead of the DVD video.

Solutions:

- Restart the DVD player program.
- Try a lower screen resolution or color depth.
- Close any open files, and then restart the computer.

A DVD movie does not play.

Solutions:

- Ensure that the disc surface is clean and not scratched.
- Check the disc or package for regional coding. You might need to purchase a disc with coding for the region where you are using your computer.

No audio or only an intermittent audio comes out while a DVD movie is playing.

Solutions:

- Check the volume control settings on your computer and on your speakers.
- Ensure that the disc surface is clean and not scratched.
- Check all cable connections to and from the speakers.
- Use the DVD menu for the video to select a different audio track.

The playback is slow or choppy.

Solutions:

- Disable any background programs, such as AntiVirus or Desktop Themes.

- Ensure that video resolution is lower than 1152 x 864 pixels.

A message indicating invalid disc or no disc found is displayed.

Solutions:

- Ensure that the disc is in the drive with the shiny side of the disc facing down.
- Ensure that video resolution is lower than 1152 x 864 pixels.
- Ensure that the DVD or CD is inserted into an appropriate optical drive. For example, do not insert a DVD into a CD-only drive.

Intermittent problems

Intermittent problems refer to the problems occur only occasionally and are difficult to repeat.

Solutions:

- Ensure that all cables and cords are securely connected to the computer and attached devices.
- Ensure that when the computer is on, the fan grill is not blocked (there is air flow around the grill), and the fans are working. If airflow is blocked or the fans are not working, the computer might overheat.
- If Small Computer System Interface (SCSI) devices are installed, ensure that the last external device in each SCSI chain is terminated correctly. For more information, see your SCSI documentation.

Storage drive problems

Some or all storage drives are missing from the Setup Utility program.

Solutions:

Ensure that the signal cables and power cables for all the storage drives are connected correctly.

The computer cannot start up from the correct storage drive or the message “No Operating System Found” is displayed.

Solutions:

- Ensure that the signal cables and power cables for all the storage drives are connected correctly.
- Ensure that the computer starts up from the correct storage drive. Set the storage drive, on which the operating system resides, as the first startup device in the Setup Utility program. Refer to “Changing the startup device sequence permanently” on page 59.

Note: In rare cases, the storage drive with the operating system might get corrupted or damaged. If this problem occurs, replace the storage drive. Refer to Chapter 9 “Hardware removal and installation” on page 81.

Ethernet LAN problems

The computer cannot connect to an Ethernet LAN.

Solutions:

- Connect the cable from the Ethernet connector to the RJ45 connector of the hub.
- Enable the Ethernet LAN feature in the Setup Utility program.
- Enable the Ethernet LAN adapter.
  1. Click the Start button to open the Start menu.

2. Click **Windows System → Control Panel**.
3. View Control Panel by Large icons or Small icons, and then click **Network and Sharing Center → Change adapter settings**.
4. Right-click the Ethernet LAN adapter icon and click **Enable**.

- Update or reinstall the Ethernet LAN driver. See “Keeping your computer current” on page 50.
- Install all networking software that is necessary for your network environment. Check with your LAN administrator for the necessary networking software.
- Set the same duplex for the switch port and the adapter. If you configured the adapter for full duplex, ensure that the switch port is also configured for full duplex. Setting the wrong duplex mode might degrade performance, cause data loss, or result in lost connections.

When a Gigabit Ethernet model computer is used at a speed of 1000 Mbps, the Ethernet LAN connection fails or errors occur.

Solution:

Connect the network cable to the Ethernet connector using Category 5 wiring and a 100 BASE-T hub/switch (not 100 BASE-X).

A Gigabit Ethernet model computer should connect to the network at a speed of 1000 Mbps but at only a speed of 100 Mbps.

Solutions:

- Try another cable.
- Set the link partner to auto-negotiate.
- Set the switch to be 802.3ab-compliant (gigabit over copper).

The Wake On LAN feature does not work.

Solution:

Enable the Wake On LAN feature in the Setup Utility program.

Wireless LAN problem

Note: The wireless LAN feature is available only on some models.

The wireless LAN feature does not work.

Solutions:

- Enable the wireless LAN feature in the Setup Utility program.
- For Windows 10, enable the wireless LAN feature in Windows Settings. Click the Start button to open the Start menu, and then click **Settings → Network & Internet → Wi-Fi**. Turn on the Wi-Fi feature.
- Enable the wireless LAN adapter.
  1. Click the Start button to open the Start menu.
  2. Click **Windows System → Control Panel**.
  3. View Control Panel by Large icons or Small icons, and then click **Network and Sharing Center → Change adapter settings**.
  4. Right-click the wireless LAN adapter icon and click **Enable**.
- Update or reinstall the wireless LAN driver. See “Keeping your computer current” on page 50.

Bluetooth problems

Note: The Bluetooth feature is available only on some models.

The Bluetooth feature does not work.

Solutions:

- Enable the Bluetooth feature in the Setup Utility program.
- Enable the Bluetooth devices. Do the following:
  1. Right-click the Start button to open the Start context menu.
  2. Click **Device Manager**. Type the administrator password or provide confirmation if prompted.
  3. Expand **Bluetooth** to display the Bluetooth devices. Then, right-click each Bluetooth device and then Click **Enable device**.
  4. Expand **Network adapters**. Then, right-click each Bluetooth device and then Click **Enable device**.
- Turn on the Bluetooth radio on Windows 10. Do the following:
  1. Click the Start button to open the Start menu.
  2. Click **Settings → Devices → Bluetooth & other devices**.
  3. Turn on the **Bluetooth** switch to enable the Bluetooth feature.
- Update or reinstall the Bluetooth driver. See “Keeping your computer current” on page 50.

No sound comes from the Bluetooth headset or headphones.

Solution:

Set the Bluetooth headset or headphones as the default device.

1. Exit the application that uses the sound device (for example, Windows Media Player).
2. Right-click the volume icon in the Windows notification area on the taskbar.

   Note: If the volume icon is not displayed in the Windows notification area, add the icon to the notification area. See the Windows help system.
3. Click **Playback devices**.
4. If you are using the Headset profile, select **Bluetooth Hands-free Audio**, and then click **Set Default**. If you are using the AV profile, select **Stereo Audio**, and then click **Set Default**.
5. Click **OK**.

Performance problems

Excessive fragmented files exist on the storage drives.

Solution:

Use the Windows disk defragmentation or disk optimization feature to clean up the files.

Note: Depending on the volume of the storage drives and amount of data stored on the storage drives, the disk-defragmentation process might take up to several hours.

1. Close any open programs and windows.
2. Click the Start button to open the Start menu.
3. Click **Windows System → File Explorer → This PC**.
4. Right-click your C drive and then click **Properties**.

5. Click the **Tools** tab.
6. Click **Optimize**. Select the desired drive and then click **Optimize**.
7. Follow the instructions on the screen.

The free storage drive space is insufficient.

Solutions:

Free up the storage drive space.

- Clean out your Inbox, Sent Items, and Deleted Items folders from your e-mail application.
- Clean up your C drive.
  1. Click the Start button to open the Start menu.
  2. Click **Windows System → File Explorer → This PC**.
  3. Right-click your C drive and then click **Properties**.
  4. Check the amount of free space, and then click **Disk Cleanup**.
  5. A list of unnecessary file categories is displayed. Select each file category you want to delete, and then click **OK**.
- Turn some Windows features off or remove some unnecessary programs.
  1. Click the Start button to open the Start menu.
  2. Click **Windows System → Control Panel**.
  3. View Control Panel by Large icons or Small icons, and then click **Programs and Features**.
  4. Do one of the following:
     - To turn some Windows features off, click **Turn Windows features on or off**. Follow the instructions on the screen.
     - To remove some unnecessary programs, select the program you want to remove, and then click **Uninstall/Change** or **Uninstall**.

The free memory space is insufficient.

Solutions:

- Right-click a blank area on the taskbar and open Task Manager. Then, end some tasks you are not performing.
- Install additional memory modules. See Chapter 9 “Hardware removal and installation” on page 81. To purchase memory modules, go to:
  https://www.lenovo.com

Serial connector problem

The serial connector cannot be accessed.

Solutions:

- Connect the serial cable from the serial connector on the computer to the serial device. If the serial device has its own power cord, connect the power cord to a grounded electrical outlet.
- Turn on the serial device and keep the device online.
- Install any programs supplied with the serial device. Refer to the documentation that comes with the serial device for more information.
- If you added one serial-connector adapter, ensure that the adapter is installed correctly.

USB device problems

A USB device cannot be accessed.

Solutions:

- Connect the USB cable from the USB connector to the USB device. If the USB device has its own power cord, connect the power cord to a grounded electrical outlet.
- Turn on the USB device and keep the device online.
- Install any device drivers or programs supplied with the USB device. Refer to the documentation that comes with the USB device for more information.
- Disconnect and reconnect the USB connector to reset the USB device.
- Ensure that the Smart USB Protection function is disabled. To configure the Smart USB Protection function, see “Using the Smart USB Protection function” on page 53.

The Windows 7 operating system cannot be installed from an external optical drive or an external USB device.

Solution:

Go to https://support.lenovo.com/us/en/documents/ht104142 for more information.

Software and driver problems

For some programs, dates cannot be sorted in correct order.

Solution:

Some programs developed before the year 2000 use only the last two digits of a year to sort dates, assuming the first two digits are 19. Consequently, dates cannot be sorted in correct order nowadays. Check with your software manufacturer to see if any updates are available. Many software manufacturers make updates available from the World Wide Web.

Some programs do not work as expected.

Solutions:

1. Check whether the problem is caused by a program.
   a. Ensure that the software is compatible with your computer. Refer to the information supplied with the software for more information.
   b. Verify that other software works properly on your computer.
   c. Verify that the software you are using works on another computer.
2. If the problem is caused by a program:
   - Refer to the printed documentation that comes with the program or the help system of the program for troubleshooting information.
   - Update the program. See “Keeping your computer current” on page 50.
   - Uninstall the program and then reinstall it. To download a program that is preinstalled on your computer, go to https://support.lenovo.com and follow the instructions on the screen.

A device does not work properly due to device driver problems.

Solution:

Update the device driver. See “Keeping your computer current” on page 50.

Diagnosing problems

Many computer problems can be solved without outside assistance. If you experience a problem with your computer, the first place to start is the troubleshooting information in your computer documentation. If you suspect a software problem, see the documentation, including readme files and help information systems, that come with the operating system or program. ThinkStation computers come with a set of diagnostic programs that you can use to help you identify hardware problems.

Diagnosing problems with Lenovo Vantage

Lenovo Vantage is preinstalled on your computer and is ready to run.

Note: If you are unable to isolate and repair the problem yourself after running Lenovo Vantage, save and print the log files created by the program. You need the log files when you speak to a Lenovo technical support representative.

Lenovo Vantage supports the hardware scan function. It combines diagnostic tests, system information collection, security status, and support information, along with hints and tips for optimal system performance.

The troubleshooting information or the diagnostic programs might tell you that you need additional or updated device drivers or other software. You can get the latest technical information and download device drivers and updates from the Lenovo Support Web site at:
https://support.lenovo.com

UEFI diagnostic program

A UEFI diagnostic program is preinstalled on the computer. It enables you to test memory modules and internal storage devices, view system information, and check and recover bad sectors on internal storage devices.

To run the UEFI diagnostic program, do the following:

1. Turn on the computer. If the computer cannot be turned on, go to “Basic procedure for resolving computer problems” on page 63. If an error code is displayed, go to “Symptom-to-FRU index” on page 74 for error code descriptions and troubleshooting hints.
2. Repeatedly press and release the F10 key when turning on the computer. The main screen of the UEFI diagnostic program is displayed.
3. Follow the instructions on the screen to use the diagnostic program.

The options on the main screen are as follows:

Table 1. Items on the main screen of the UEFI diagnostic program

DIAGNOSTICS	TOOLS
• LCD test • Memory - Quick test • Memory - Extended test • Motherboard test • PCI-e test • Storage - Quick test	• System information • Recover bad sectors tool • Generate configuration file • Execute from configuration file • Exit application

Recovery information

This section provides instructions on how to recover your operating system.

Note: If a device does not work correctly after recovering the operating system, update the device driver. See “Keeping your computer current” on page 50.

To recover your Windows 10 operating system, use the following solutions:

- Use Windows recovery solutions.
  - Use recovery solutions in Windows Settings.
    1. Click the Start button to open the Start menu.
    2. Click **Settings → Update & Security → Recovery**.
    3. Follow the instructions on the screen to choose the appropriate recovery solution.
  - Use System Restore to restore system files and settings to an earlier point.
    1. Click the Start button to open the Start menu.
    2. Click **Windows System → Control Panel**.
    3. View Control Panel by Large icons or Small icons, and then click **Recovery → Open System Restore**.
    4. Follow the instructions on the screen.
  - Use the File History tool to restore your files from a backup.

    Note: If you use the File History tool to restore your files from a backup, ensure that you backed up your data earlier with the tool.
    1. Click the Start button to open the Start menu.
    2. Click **Windows System → Control Panel**.
    3. View Control Panel by Large icons or Small icons, and then click **File History → Restore personal files**.
    4. Follow the instructions on the screen.
  - Use the Windows recovery environment by doing one of the following:
    - After several consecutive failed boot attempts, the Windows recovery environment might start automatically. Follow the instructions on the screen to choose the appropriate recovery solution.
    - Select the recovery medium you created earlier with the Windows tool as the startup device. See “Selecting a temporary startup device” on page 60. Then, follow the instructions on the screen to choose the appropriate recovery solution.
- Use the recovery USB key provided by Lenovo to restore the entire storage drive to the factory-default settings.
  - If your computer comes with the recovery USB key, follow the instructions shipped with the USB key.
  - If your computer does not come with the recovery USB key, contact the Lenovo Customer Support Center to order a recovery USB key. See “Calling for service” on page 136.

Chapter 8. Service checkout and symptom-to-FRU index

This chapter provides information about general service checkout and symptom-to-FRU index.

Service checkout

Attention: The drives in the computer you are servicing might have been rearranged or the drive startup sequence changed. Be extremely careful during write operations such as copying, saving, or formatting. Data or programs can be overwritten if you select an incorrect drive.

General error messages appear if a problem or conflict is found by a program, the operating system, or both. For an explanation of these messages, refer to the information supplied with that software package.

Before replacing any FRUs, ensure that the latest level of BIOS is installed on the system. A down-level BIOS might cause false errors and unnecessary replacement of the system board. For more information about how to determine and obtain the latest level BIOS.

Use the following procedure to help determine the cause of the problem:

1. Turn off the computer and all external devices.
2. Check all cables and power cords.
3. Set all display controls to the middle position.
4. Turn on all external devices.
5. Turn on the computer.
   - Look for displayed error codes.
   - Listen for beep codes.
   - Look for readable instructions or a main menu on the display.

   If you *did not* receive the correct response, proceed to step 6.

   If you *do* receive the correct response, proceed to step 7.
6. Look at the following conditions and follow the instructions:
   - If you hear beep codes during POST, go to “Beep symptoms” on page 75.
   - If the computer displays a POST error, go to “POST error codes” on page 76.
   - If the computer hangs and no error is displayed, continue at step 7.
7. Run the Diagnostic programs. See “Diagnosing problems” on page 71.
   - If you receive an error, replace the part that the diagnostic program calls out.
   - If the test stops and you cannot continue, replace the last device tested.

Problem determination tips

Due to the variety of hardware and software combinations that can be encountered, use the following information to assist you in problem determination. If possible, have this information available when requesting assistance from Service Support and Engineering functions.

- Machine type and model
- Processor or hard disk drive upgrades
- Failure symptom
  - Do diagnostics indicate a failure?

© Copyright Lenovo 2018, 2019

  - What, when, where, single, or multiple systems?
  - Is the failure repeatable?
  - Has this configuration ever worked?
  - If it has been working, what changes were made prior to its failing?
  - Is this the original reported failure?
- Diagnostics version
  - Type and version level
- Hardware configuration
  - Print (print screen) configuration currently in use
  - BIOS level
- Operating system software
  - Type and version level

Notes: To eliminate confusion, identical systems are considered identical only if they:

1. Are the exact machine type and models
2. Have the same BIOS level
3. Have the same adapters/attachments in the same locations
4. Have the same address jumpers/terminators/cabling
5. Have the same software versions and levels
6. Have the same Diagnostic Diskettes (version)
7. Have the same configuration options set in the system
8. Have the same setup for the operating system control files

Comparing the configuration and software set-up between “working and non-working” systems will often lead to problem resolution.

Symptom-to-FRU index

The Symptom-to-FRU index lists error symptoms and possible causes. The most likely cause is listed first. Always begin with “Service checkout” on page 73. This index can also be used to help you decide which FRUs to have available when servicing a computer. If you are unable to correct the problem using this index, go to “Undetermined problems” on page 79.

Notes:

- The Symptom-to-FRU index is not specific to any machine type and are applicable to all ThinkStation computers.
- If you have both an error message and an incorrect audio response, diagnose the error message first.
- If you cannot run the diagnostic tests or you get a diagnostic error code when running a test, but did receive a POST error message, diagnose the POST error message first.
- If you did not receive any error message, look for a description of your error symptoms in the first part of this index.

Hard disk drive boot error

A hard disk drive boot error can have the following causes.

Error	FRU/Action
The start-up drive is not in the boot sequence in configuration.	Check the configuration and ensure that the start-up drive is in the boot sequence.
No operating system installed on the boot drive.	Install an operating system on the boot drive.
The boot sector on the startup drive is corrupted.	The drive must be formatted. Do the following: 1. Attempt to back up the data on the failing hard disk drive. 2. Using the operating system programs, format the hard disk drive.
The drive is defective.	Replace the hard disk drive.

Power supply problems

If you suspect a power problem, use the following procedures.

Check/Verify	FRU/Action
Check the following for proper installation. • Power cord • On/Off switch connector • On/Off switch power supply connector • System board power supply connectors • Microprocessor connection	Reseat connectors
Check the power cord for continuity.	Power cord
Check the power-on switch for continuity.	Power-on switch

Beep symptoms

Beep symptoms are tones or a series of tones separated by pauses (intervals without sound) during POST.

The following table describes the beep symptoms.

Beep symptom	FRU/Action
2 short beeps: common POST error	Common POST error code. See the detailed failure information in “POST error codes” on page 76.
3 short and 1 long beeps: DRAM memory error	Perform the following actions in order: 1. Make sure that the memory modules are properly seated in the memory slots. 2. Replace the memory modules. 3. Replace the system board (for trained service personnel only).

Beep symptom	FRU/Action
4 long beeps: insufficient shadow RAM resources for option ROM (error code: 8998) or PCIe/PCI MMIO (memory mapped input/output) resources (error code: 8999)	See the detailed failure information in “POST error codes” on page 76.
2 long and 3 short beeps: graphics card error	Perform the following actions in order: 1. Make sure that the graphics cards are properly seated in the slots. 2. Replace the graphics cards. 3. Replace the system board (for trained service personnel only).

POST error codes

Each time you turn on the system, it performs a series of tests that check the operation of the system and some options. This series of tests are called the *Power-On Self-Test*, or *POST*. POST checks the following operations:

- Some basic system-board operations
- Memory operation
- Video operation
- Whether the boot drive is working

If the POST detects a problem, an error message appears on the screen. A single problem might cause several error messages to appear. When you correct the cause of the first error message, the other error messages probably will not appear on the screen the next time.

Error code	POST error message	Description/Action
0135	CPU fan failure System fan failure Power fan failure Front fan failure Rear fan failure Auxiliary fan failure ODD fan failure	This error message is displayed when a fan fails and the system might be overheating. Press F10 to exit.
0211	Keyboard not found	This error message is displayed when no keyboard is detected.
0164	Memory size decreased	This error message is displayed when the memory size is decreased. Press F10 to exit.
1762	SATA device configuration change has occurred	This error message is displayed when a hard disk drive change or an optical drive change has been made. Press F10 to exit.

Error code	POST error message	Description/Action
1820	More than one external fingerprint reader is attached. Turn off and remove all but the reader that you set up within your main operating system.	This error message is displayed when more than one external fingerprint reader is connected to the computer. Turn off and remove all but the reader that you set up within your main operating system.
1962	No operating system found. Boot sequence will automatically repeat.	This error occurs only after the POST is completed. Press any key to repeat boot sequence.
8998	Not enough shadow RAM resources for OPTION ROM, not all devices initialized. Suggest to remove some add-on cards, or change to UEFI mode in BIOS setup.	This error message is displayed when the shadow RAM resources for option ROM are insufficient. If the legacy option ROM is insufficient, remove some add-in cards. For the system that supports UEFI, set UEFI as the first priority or disable CSM in BIOS setup.
8999	Not enough PCIe/PCI MMIO resources. Currently only one video card is enabled. Remove some PCIe cards, or enter BIOS Setup and enable “Above 4GB Decode”	This error message is displayed when the PCIe/PCI MMIO (memory mapped input/output) resources are insufficient. For the 32-bit operating system, remove some add-in cards. For the 64-bit operating system, enable **Above 4 GB Decode** in BIOS setup.

Miscellaneous error conditions

Message/Symptom	FRU/Action
Changing display colors	**Display/Monitor**
Computer will *not* power-off. See “Hard disk drive boot error” on page 74.	1. Power Switch 2. System Board 3. Riser card, if installed.
Computer will *not* RPL from server	1. Ensure that the network is in startup sequence as the first device or the first device after diskette. 2. Ensure that the network adapter is enabled for RPL. 3. Network adapter (Advise network administrator of new MAC address)

Message/Symptom	FRU/Action
Computer will *not* perform a Wake On LAN® (if applicable)	1. Check the power supply and signal cable connections to the network adapter. 2. Ensure that the operating system settings are set to enable Wake on LAN. 3. Ensure that the Wake On LAN feature is enabled in Setup/Configuration. 4. Ensure that the network administrator is using the correct MAC address. 5. Ensure no interrupt or I/O address conflicts. 6. Network adapter (advise network administrator of new MAC address)
Dead computer. See “Hard disk drive boot error” on page 74.	1. Power Supply 2. System Board
Diskette drive in-use light remains on or does not light when drive is active.	1. Diskette Drive 2. System Board 3. Diskette Drive Cable
Blank screen except for flashing cursor.	1. System Board 2. Primary Hard Disk Drive 3. Hard Disk Drive Cable
Incorrect memory size during POST	1. Run the Memory tests. 2. Memory Module 3. System Board
"Insert a Diskette" icon appears with a known-good diagnostics diskette in the first 3.5-inch diskette drive.	1. System Board 2. Diskette Drive Cable 3. Network Adapter
Intensity or color varies from left to right of characters and color bars	1. Display 2. Video adapter (if present) 3. System Board
No power or fan not running	1. See “Hard disk drive boot error” on page 74.
Non-system disk or disk error-type message with a known-good diagnostic diskette.	1. Diskette Drive 2. System Board 3. Diskette Drive Cable
Other display symptoms not listed above (including blank or illegible display)	1. Display 2. System Board
Power-on indicator or hard disk drive in-use light not on, but computer works correctly	1. Power switch/LED assembly 2. System Board
Printer problems	1. Printer 2. System Board

Message/Symptom	FRU/Action
Program loads from the hard disk with a known-good diagnostics diskette in the first 3.5-inch diskette drive	1. Run the Setup Utility program and check the Startup sequence. 2. Diskette Drive 3. Diskette Drive Cable 4. System Board 5. Power Supply
RPL computer cannot access programs from its own hard disk.	1. If the network administrator is using LCCM Hybrid RPL, check the startup sequence: a. **First device - network** b. **Second device - hard disk** 2. Hard disk drive
RPL computer does not RPL from server	1. Check the startup sequence. 2. Check the network adapter LED status.
Serial or parallel connector device failure (system board connector)	1. External Device Self-Test OK? 2. External Device 3. Cable 4. System Board
Serial or parallel connector device failure (adapter connector)	1. External Device Self-Test OK? 2. External Device 3. Cable 4. Alternate Adapter 5. System Board
Some or all keys on the keyboard do not work	1. Keyboard 2. Keyboard Cable 3. System Board

Undetermined problems

This section provides instructions on how to find out the failing devices or adapters.

1. Turn off the computer.
2. Remove or disconnect the following components (if installed) one at a time.
   a. External devices (modem, printer, or mouse)
   b. Any adapters
   c. Memory modules
   d. Extended video memory
   e. External Cache
   f. External Cache RAM
   g. Hard disk drive
   h. Diskette drive
3. Turn on the computer to retest the system.

4. Repeat steps 1 through 3 until you find the failing device or adapter.

If all devices and adapters have been removed, and the problem continues, replace the system board. See “System board and chassis” on page 128.

Chapter 9. Hardware removal and installation

This chapter provides instructions on how to remove and install hardware for your computer.

Handling static-sensitive devices

Do not open the static-protective package containing the new part until the defective part has been removed and you are ready to install the new part. Static electricity, although harmless to you, can seriously damage computer components and options.

When you handle options and other computer components, take these precautions to avoid static-electricity damage:

- Limit your movement. Movement can cause static electricity to build up around you.
- Always handle options and other computer components carefully. Handle PCI/PCIe cards, memory modules, system boards, and microprocessors by the edges. Never touch any exposed circuitry.
- Prevent others from touching the options and other computer components.
- Touch the static-protective package containing the part to a metal expansion-slot cover or other unpainted metal surface on the computer for at least two seconds. This reduces static electricity from the package and your body before you install or replace a new part.
- When possible, remove the new part from the static-protective package, and install it directly in the computer without setting the part down. When this is not possible, place the static-protective package on a smooth, level surface and place the part on the package.
- Do not place the part on the computer cover or other metal surface.

Customer Replaceable Units

Customer Replaceable Units (CRUs) are parts that can be upgraded or replaced by the customer. ThinkStation computers contain the following types of CRUs:

- **Self-service CRUs:** Refer to parts that can be installed or replaced easily by customer themselves or by trained service technicians at an additional cost.
- **Optional-service CRUs:** Refer to parts that can be installed or replaced by customers with a greater skill level. Trained service technicians can also provide service to install or replace the parts under the type of warranty designated for the customer's machine.

If you intend on installing the CRU, Lenovo will ship the CRU to you. CRU information and replacement instructions are shipped with your product and are available from Lenovo at any time upon request. You might be required to return the defective part that is replaced by the CRU. When return is required: (1) return instructions, a prepaid shipping label, and a container will be included with the replacement CRU; and (2) you might be charged for the replacement CRU if Lenovo does not receive the defective CRU within thirty (30) days of your receipt of the replacement CRU. See your Lenovo Limited Warranty documentation at https://www.lenovo.com/warranty/llw_02 for full details.

For the CRU information of your computer, refer to the following list.

Note: Depending on your computer model, some hardware parts might not be available.

Self-service CRUs

- Bottom cover

© Copyright Lenovo 2018, 2019

- Computer cover
- Dust shield
- External optical drive
- External optical drive box
- Internal speaker
- Keyboard
- M.2 storage drive
- Memory module
- Mouse
- Power adapter
- Power cord
- Power adapter bracket
- Vertical stand
- VESA mount bracket

Optional-service CRUs

- Coin-cell battery
- Graphics card
- PCIe converter
- Storage drive
- Storage drive bracket
- System fan
- Wi-Fi card
- Wi-Fi card shield

Removing and installing hardware

This section provides instructions on how to remove and install hardware for your computer. You can expand the capabilities of your computer and maintain your computer by removing or installing hardware.

Attention: Do not open your computer or attempt any repair before reading and understanding the Chapter 1 “Read this first: Important safety information” on page 1.

Keyboard or wireless keyboard

Attention: Do not open your computer or attempt any repair before reading and understanding the Chapter 1 “Read this first: Important safety information” on page 1.

Note: The wireless keyboard is available only on some models.

Keyboard

1. Turn off the computer and disconnect all power cords from electrical outlets.
2. Disconnect the old keyboard cable from the computer.

3. Connect a new keyboard to the appropriate connector on the computer.

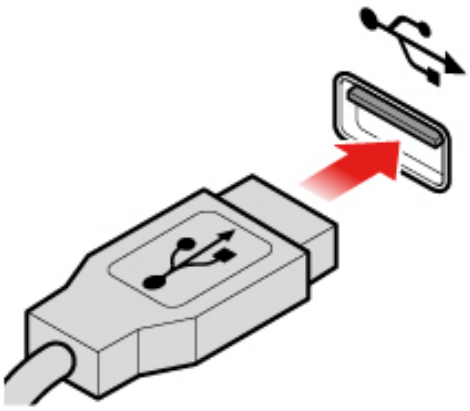

Figure 7. Replacing the keyboard

Wireless keyboard

1. Remove your old wireless keyboard.
2. Take out the new wireless keyboard from the package.
3. Open the battery compartment cover, and install two AAA batteries according to the polarity indicators.

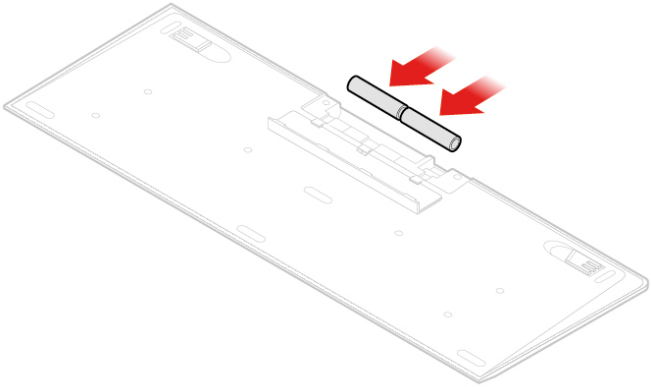

Figure 8. Replacing the wireless keyboard

4. Remove the USB dongle from the keyboard compartment or from the wireless mouse compartment and connect it to an available USB connector on the computer.
5. Close the compartment cover. The keyboard is ready for use.

Mouse or wireless mouse

Attention: Do not open your computer or attempt any repair before reading and understanding the Chapter 1 “Read this first: Important safety information” on page 1.

Note: The wireless mouse is available only on some models.

Mouse

1. Turn off the computer and disconnect all power cords from electrical outlets.
2. Disconnect the old mouse cable from the computer.
3. Connect a new mouse to the appropriate connector on the computer.

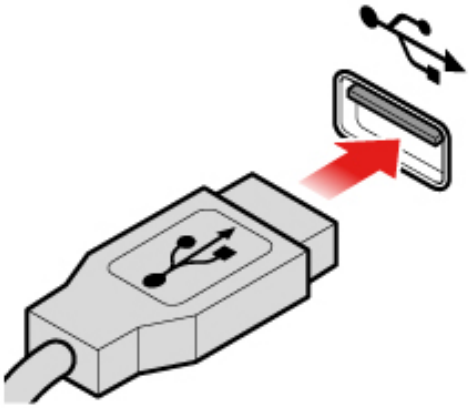

Figure 9. Replacing the mouse

Wireless mouse

1. Disconnect the USB dongle from your computer. Then, remove your old wireless mouse.
2. Remove the new wireless mouse from the package.
3. Open the battery compartment cover, and install two AAA batteries according to the polarity indicators.

a. Open the battery compartment.

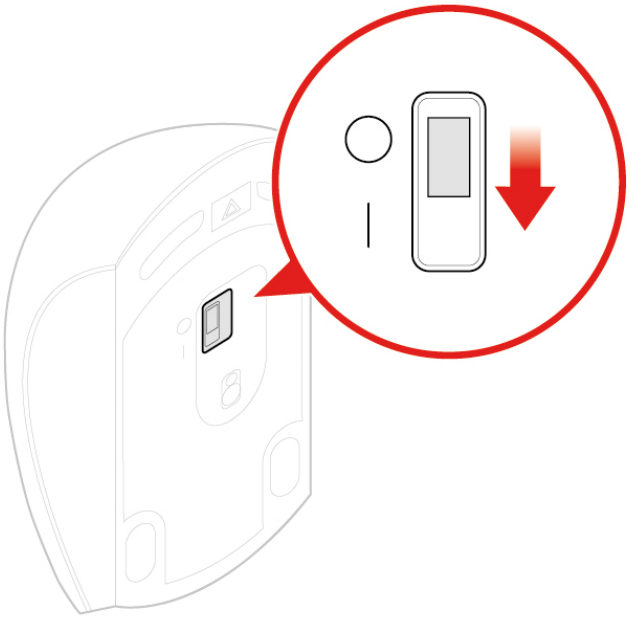

Figure 10. Opening the battery compartment

b. Take out the USB dongle.

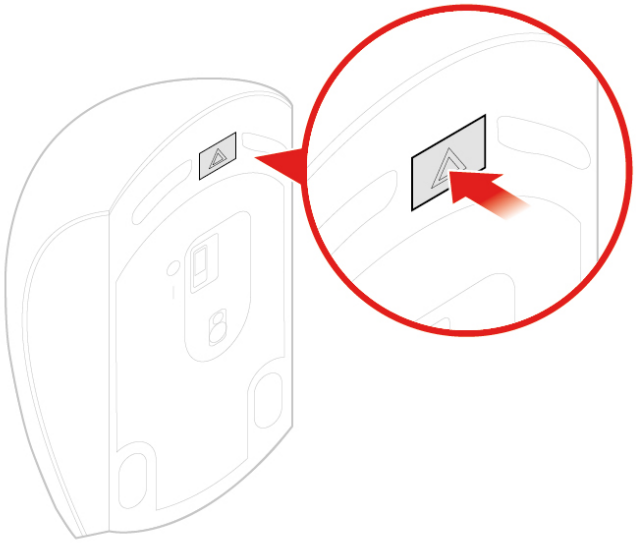

Figure 11. Taking out the USB dongle

c. Connect the USB dongle to a USB connector.

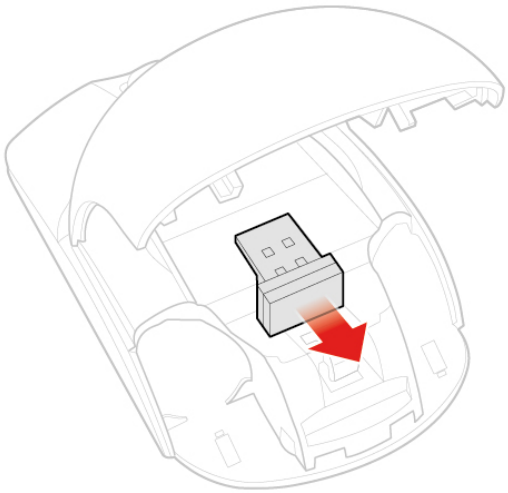

Figure 12. Connecting the USB dongle to a USB connector

d. Install the mouse batteries.

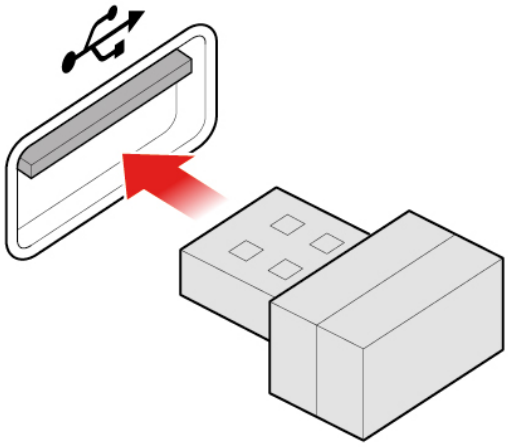

Figure 13. Installing the mouse batteries

e. Close the battery compartment cover.

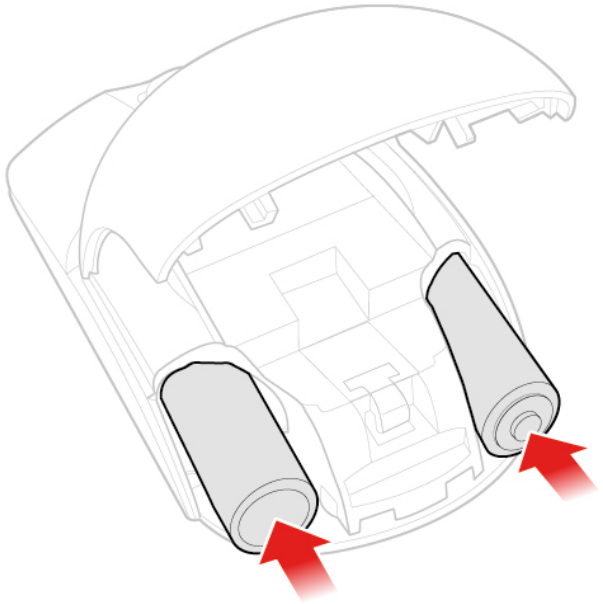

Figure 14. Closing the battery compartment cover

f. Push the power switch to the on position.

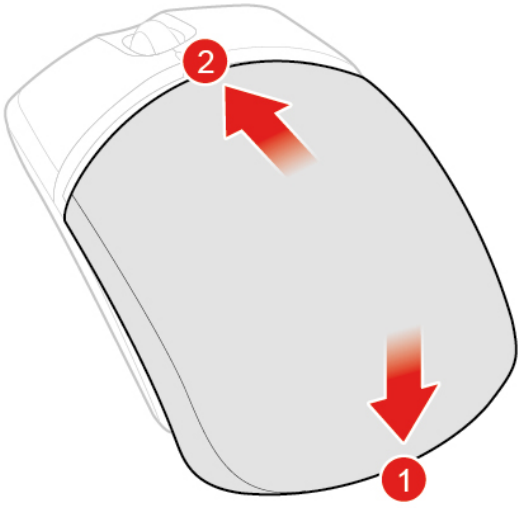

Figure 15. Pushing the power switch to the on position

Notes:

- The green LED indicates that the mouse is ready for use.
- The flashing amber LED indicates a low battery level.
- Push the power switch to the off position when you are not using the mouse to extend the battery life.
- After disconnecting the USB dongle from your computer, store it in the wireless mouse compartment or in the wireless keyboard compartment.

Power adapter

Attention: Do not open your computer or attempt any repair before reading and understanding the Chapter 1 “Read this first: Important safety information” on page 1.

Note: The P330 Tiny computer supports the following Tiny-in-one (TIO) monitor models: Tiny-in-One 23-Monitor (MT: 10DQ), Tiny-in-One 22- Monitor (MT: 10LK), Tiny-in-One 24- Monitor (MT: 10LL), TIO22Gen3-Monitor (MT: 10R1), TIO22Gen3Touch- Monitor (MT: 10R0), TIO24Gen3- Monitor (MT: 10QY), and TIO24Gen3Touch- Monitor (MT: 10QX).

1. Remove any media from the drives and turn off all connected devices and the computer.
2. Disconnect all power cords from electrical outlets and disconnect all cables that are connected to the computer.
3. Replace the power adapter.

   Note: Your power cord might look different from the one illustrated.

a. Remove the power adapter.

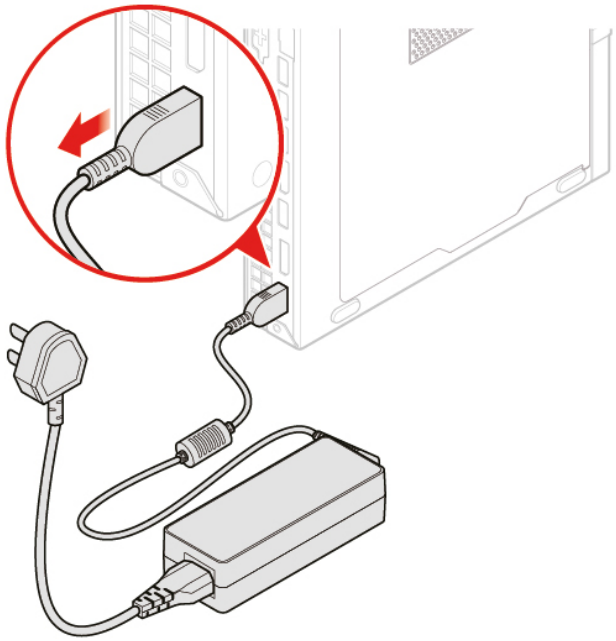

Figure 16. Removing the power adapter

b. Remove the power cord.

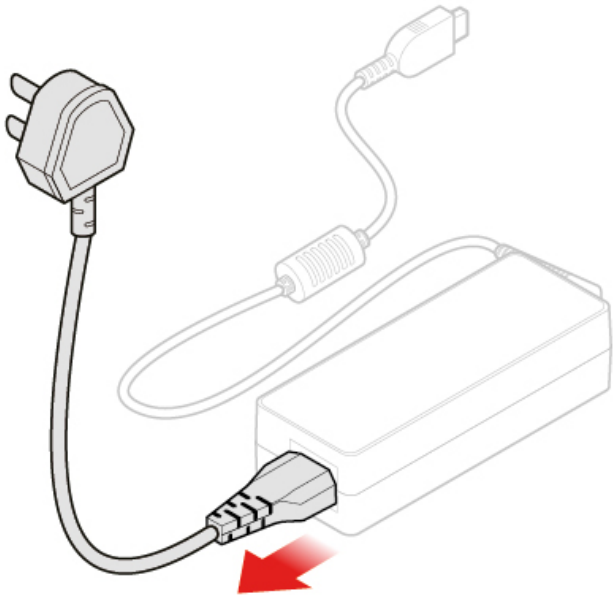

Figure 17. Removing the power cord

c. Install the power cord.

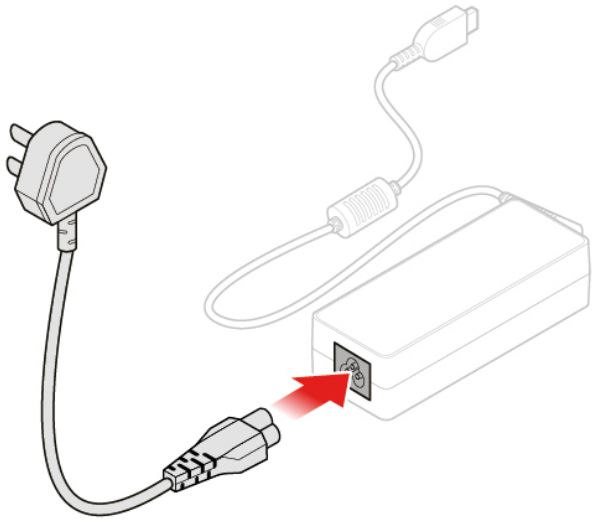

Figure 18. Installing the power cord

d. Install the power adapter.

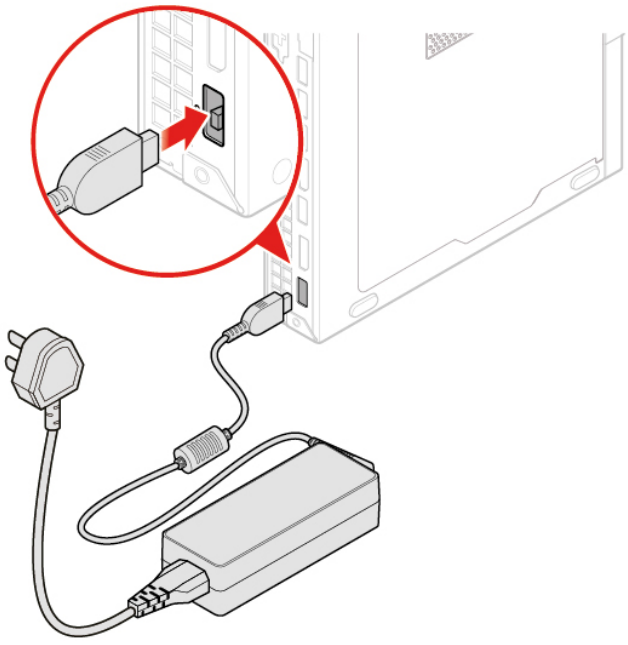

Figure 19. Installing the power adapter

Vertical stand

Attention: Do not open your computer or attempt any repairs before reading the *Important Product Information Guide*.

1. Remove any media from the drives and turn off all connected devices and the computer.
2. Disconnect all power cords from electrical outlets and disconnect all cables that are connected to the computer.

3. Replace the vertical stand.
   a. Remove the vertical stand.

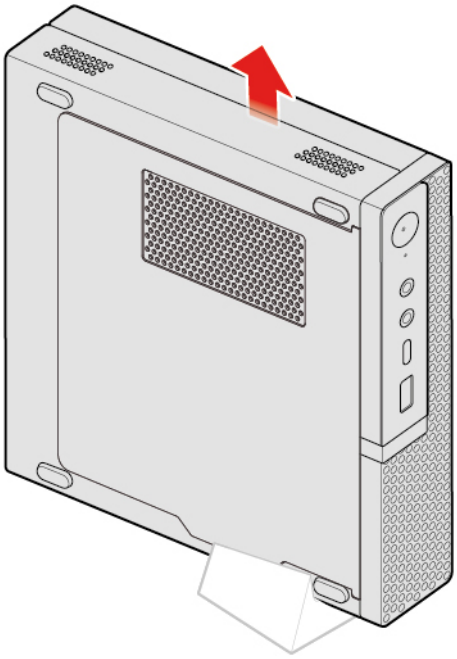

Figure 20. Removing the vertical stand

   b. Install the vertical stand.

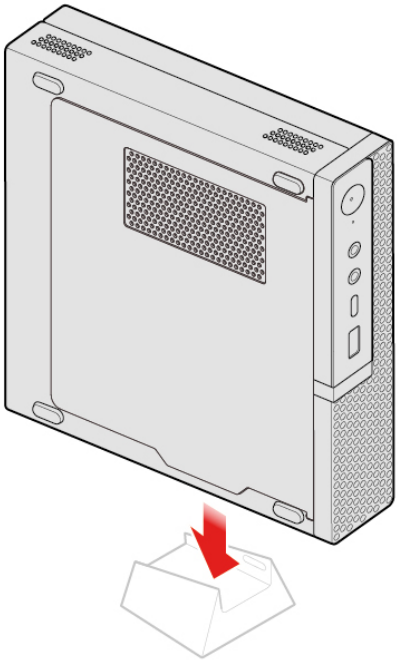

Figure 21. Installing the vertical stand

VESA mount bracket

Attention: Do not open your computer or attempt any repair before reading and understanding the Chapter 1 “Read this first: Important safety information” on page 1.

1. Remove any media from the drives and turn off all connected devices and the computer.
2. Disconnect all power cords from electrical outlets and disconnect all cables that are connected to the computer.
3. Replace the VESA mount bracket.
   a. Remove the VESA mount bracket.

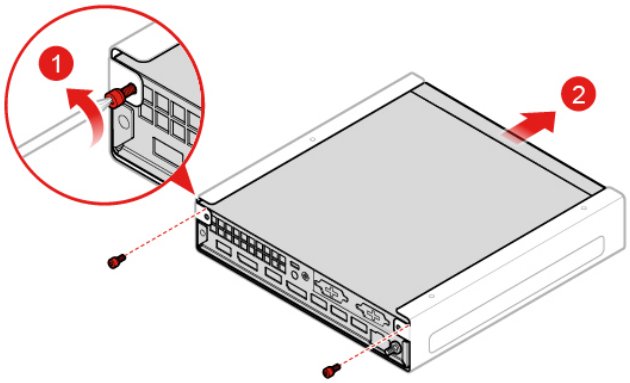

Figure 22. Removing the VESA mount bracket

   b. Install the VESA mount bracket.

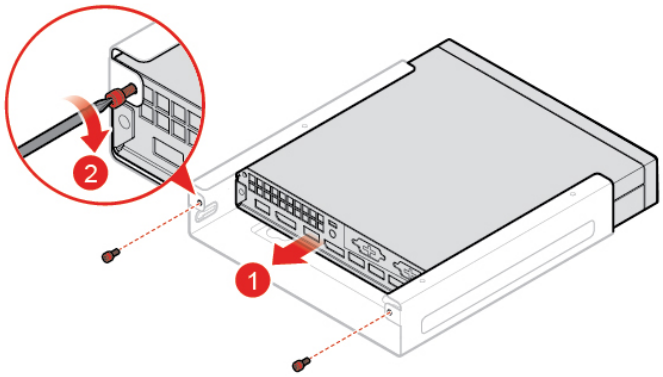

Figure 23. Installing the VESA mount bracket

External optical drive

Attention: Do not open your computer or attempt any repair before reading and understanding the Chapter 1 “Read this first: Important safety information” on page 1.

1. Remove any media from the drives and turn off all connected devices and the computer.
2. Disconnect all power cords from electrical outlets and disconnect all cables that are connected to the computer.
3. Replace the external optical drive.

a. Remove the external optical drive box.

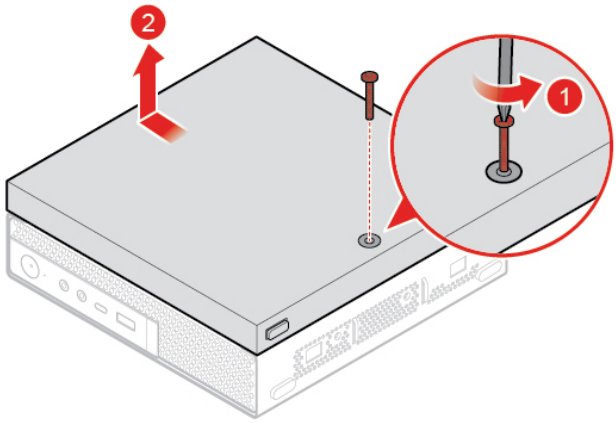

Figure 24. Removing the external optical drive box

b. Remove the external optical drive.

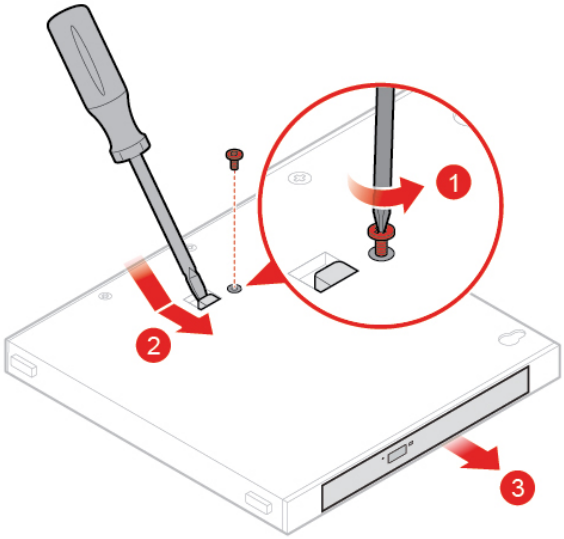

Figure 25. Removing the external optical drive

c. Install the external optical drive.

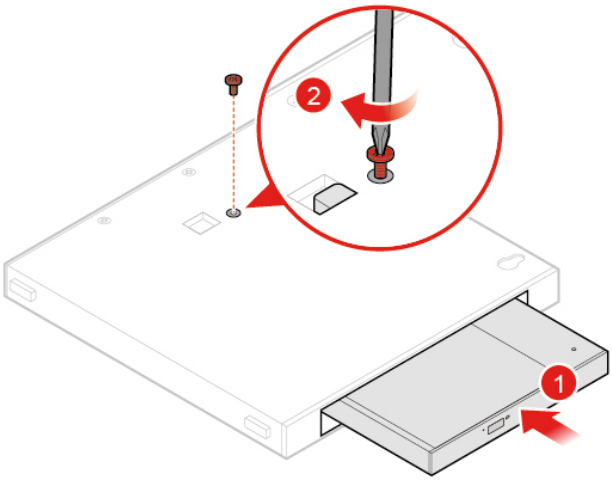

Figure 26. Installing the external optical drive

d. Install the external optical drive box.

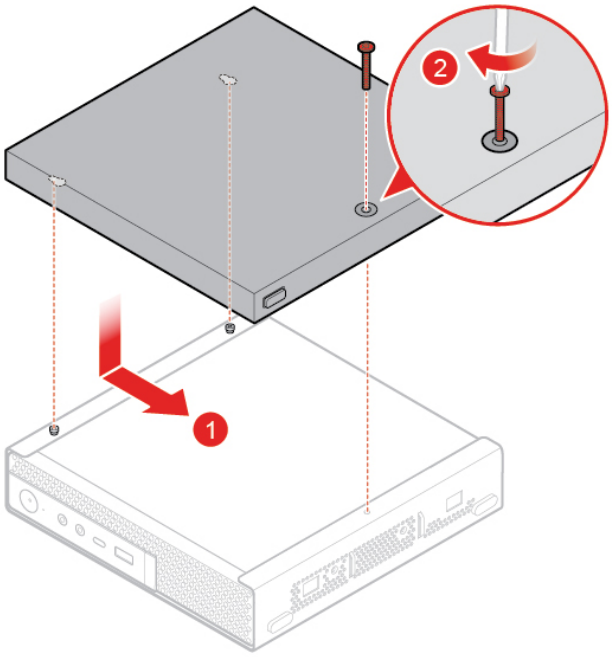

Figure 27. Installing the external optical drive box

Power adapter bracket

Attention: Do not open your computer or attempt any repair before reading and understanding the Chapter 1 “Read this first: Important safety information” on page 1.

1. Remove any media from the drives and turn off all connected devices and the computer.
2. Disconnect all power cords from electrical outlets and disconnect all cables that are connected to the computer.
3. Replace the power adapter bracket.

a. Remove the power adapter bracket.

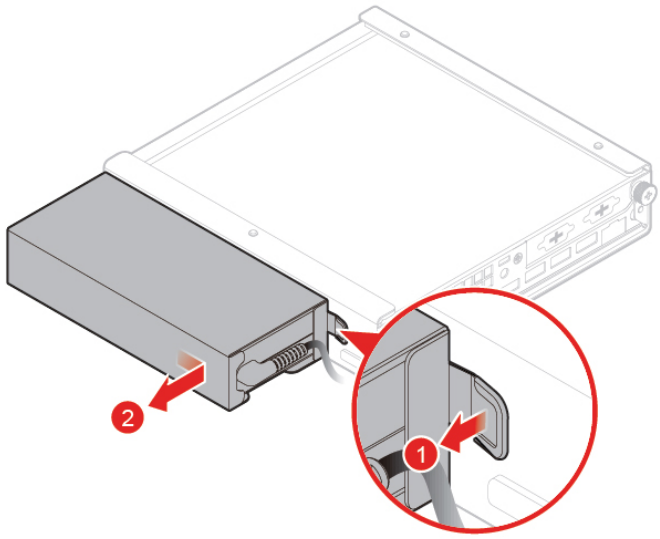

Figure 28. Removing the power adapter bracket

b. Install the power adapter bracket.

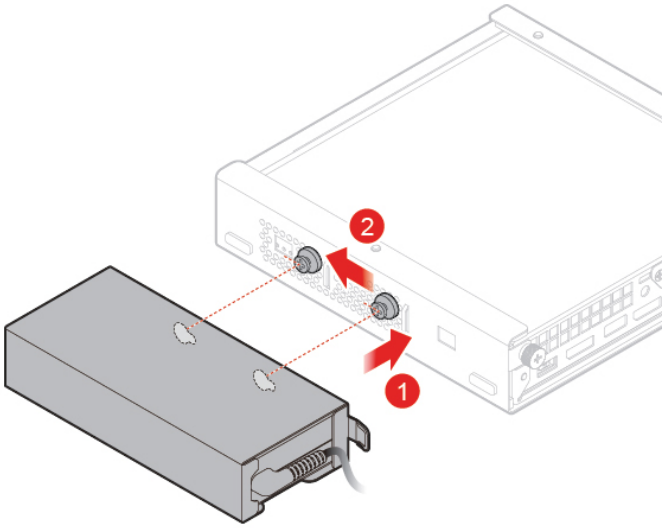

Figure 29. Installing the power adapter bracket

Computer cover

Attention: Do not open your computer or attempt any repair before reading and understanding the Chapter 1 “Read this first: Important safety information” on page 1.

CAUTION:



Avoid contact with hot components inside the computer. During operation, some components become hot enough to burn the skin. Before you open the computer cover, turn off the computer, disconnect power, and wait approximately 10 minutes for the components to cool.

1. Remove any media from the drives and turn off all connected devices and the computer.
2. Disconnect all power cords from electrical outlets and disconnect all cables that are connected to the computer.
3. Remove the computer cover.

   Note: The dust shield is optional.

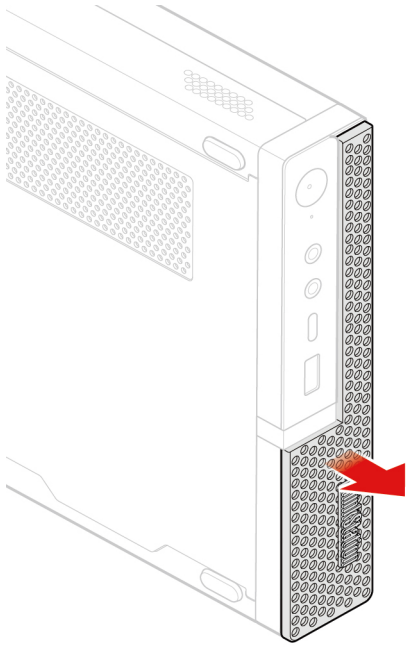

Figure 30. Removing the dust shield

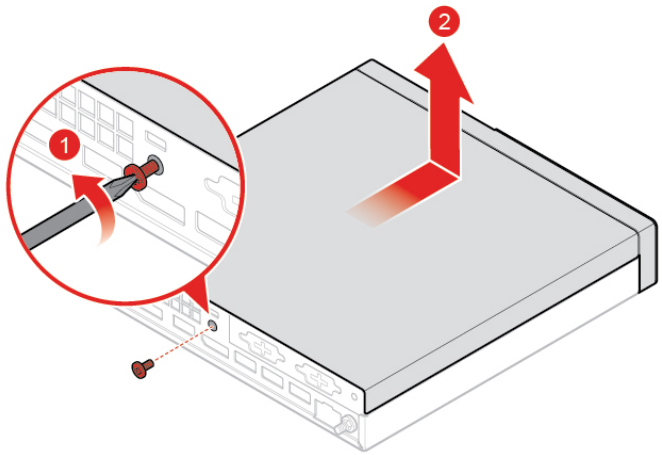

Figure 31. Removing the computer cover

Storage drive

Note: The storage drive is optional.

Attention: Do not open your computer or attempt any repair before reading and understanding the Chapter 1 “Read this first: Important safety information” on page 1.

1. Remove any media from the drives and turn off all connected devices and the computer.
2. Disconnect all power cords from electrical outlets and disconnect all cables that are connected to the computer.
3. Remove the computer cover. For details, see “Computer cover” on page 95.
4. Disconnect the storage drive cable from the system board.
5. Replace the storage drive.
   a. Remove the storage drive bracket.

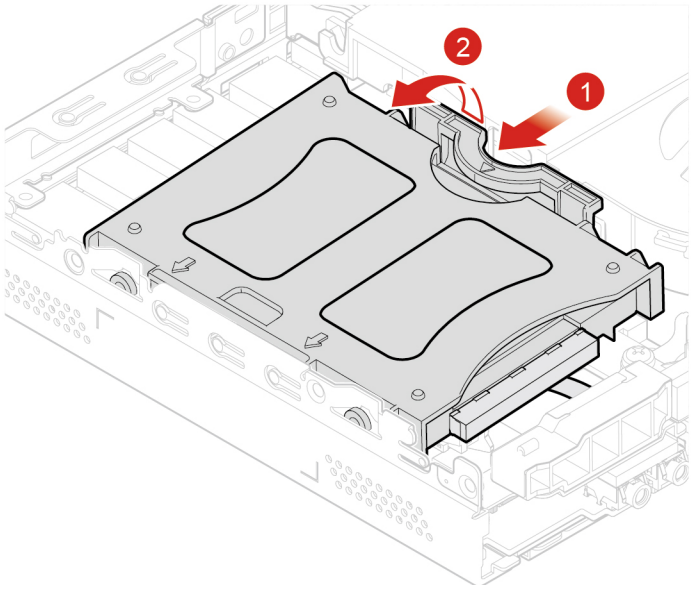

Figure 32. Removing the storage drive bracket

b. Remove the storage drive.

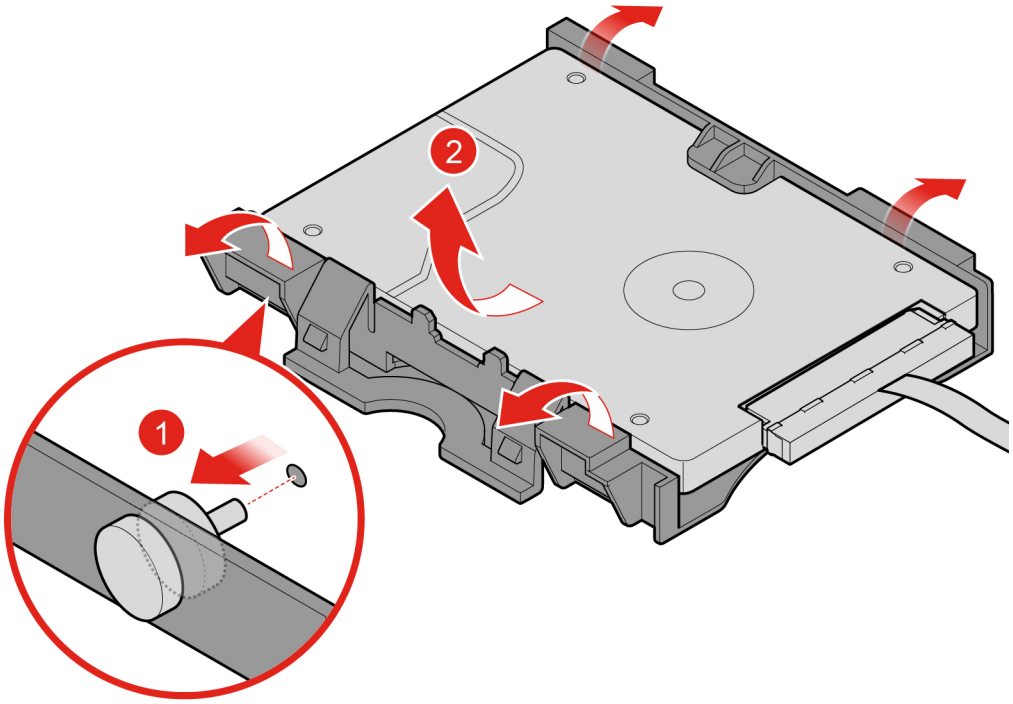

Figure 33. Removing the storage drive

c. Install the storage drive.

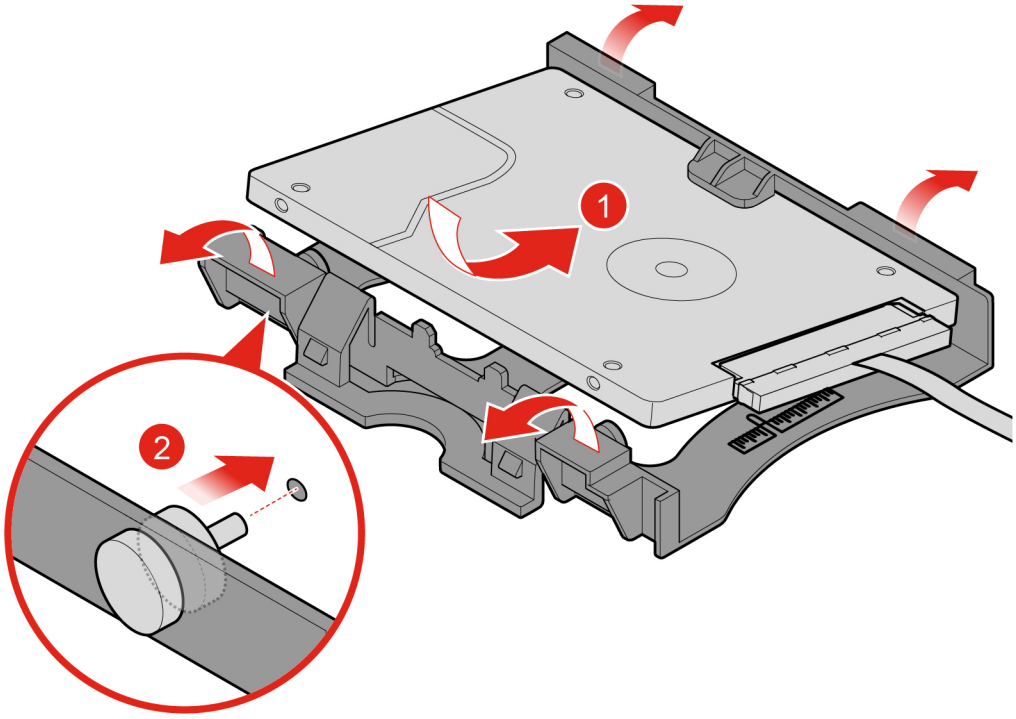

Figure 34. Installing the storage drive

d. Install the storage drive bracket.

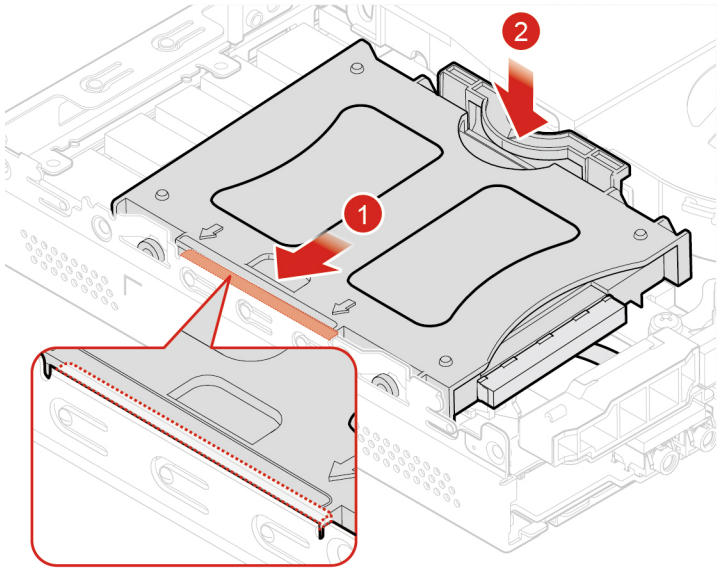

Figure 35. Installing the storage drive bracket

6. Connect the storage drive cable to the system board. See “Parts on the system board” on page 32.
7. Reinstall the computer cover and reconnect the cables. For details, see “Completing the parts replacement” on page 131.

Internal speaker

Attention: Do not open your computer or attempt any repair before reading and understanding the Chapter 1 “Read this first: Important safety information” on page 1.

1. Remove any media from the drives and turn off all connected devices and the computer.
2. Disconnect all power cords from electrical outlets and disconnect all cables that are connected to the computer.
3. Remove the computer cover. For details, see “Computer cover” on page 95.
4. Disconnect the internal speaker cable from the internal speaker connector on the system board. See “Parts on the system board” on page 32.
5. Replace the internal speaker.
   a. Remove the internal speaker.

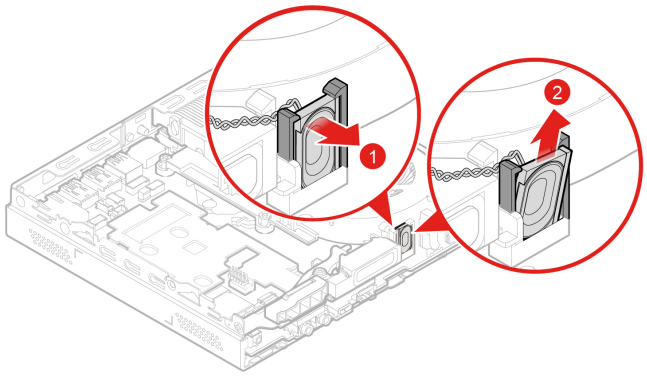

Figure 36. Removing the internal speaker

   b. Install the internal speaker.

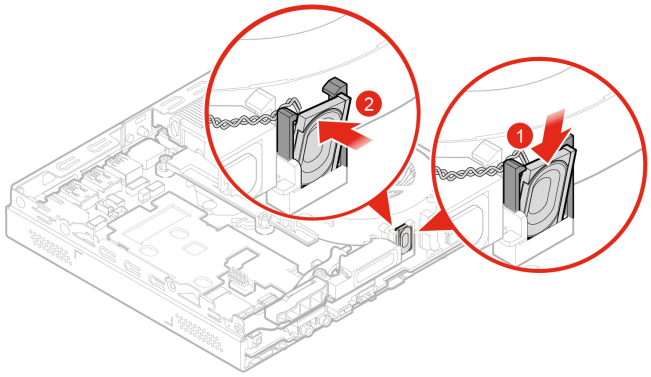

Figure 37. Installing the internal speaker

6. Connect the internal speaker cable to the internal speaker connector on the system board. See “Parts on the system board” on page 32.
7. Reinstall the computer cover and reconnect the cables. For details, see “Completing the parts replacement” on page 131.

Advanced speaker

Attention: Do not open your computer or attempt any repair before reading and understanding the Chapter 1 “Read this first: Important safety information” on page 1.

Note: The advanced speaker is optional.

1. Remove any media from the drives and turn off all connected devices and the computer.
2. Disconnect all power cords from electrical outlets and disconnect all cables that are connected to the computer.
3. Remove the computer cover. For details, see “Computer cover” on page 95.
4. Replace the advanced speaker.
   a. Remove the advanced speaker.

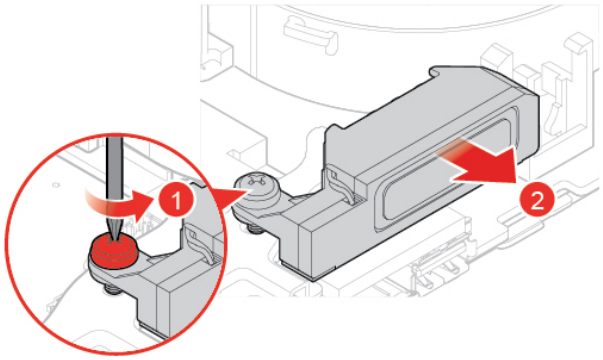

Figure 38. Removing the advanced speaker

   b. Install the advanced speaker.

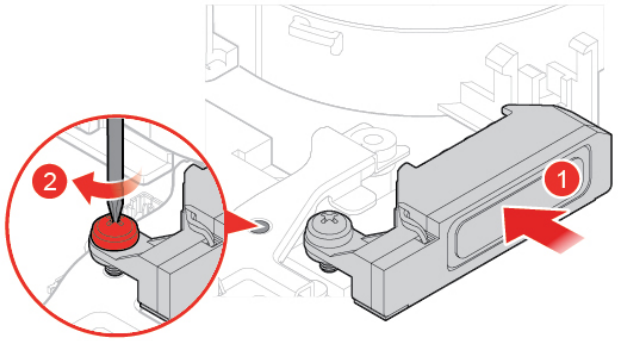

Figure 39. Installing the advanced speaker

5. Reinstall the computer cover and reconnect the cables. For details, see “Completing the parts replacement” on page 131.

Graphics card

Attention: Do not open your computer or attempt any repair before reading and understanding the Chapter 1 “Read this first: Important safety information” on page 1.

1. Remove any media from the drives and turn off all connected devices and the computer.

2. Disconnect all power cords from electrical outlets and disconnect all cables that are connected to the computer.
3. Remove the computer cover. For details, see “Computer cover” on page 95.
4. Remove the system fan. For details, see “System fan” on page 106.
5. Replace the graphics card.
   - Type 1
     a. Remove the graphics card from the computer.

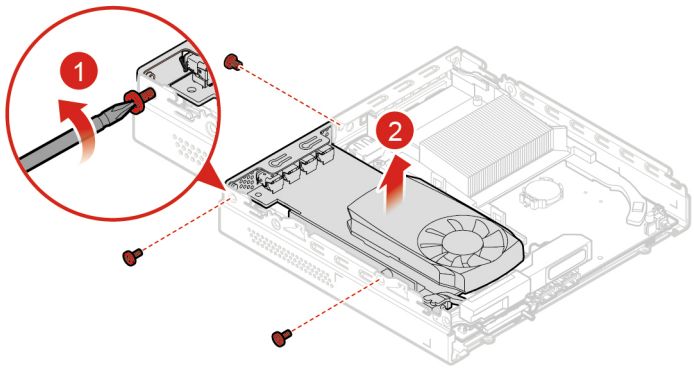

Figure 40. Removing the graphics card

     b. Remove the PCIe converter from the graphics card.

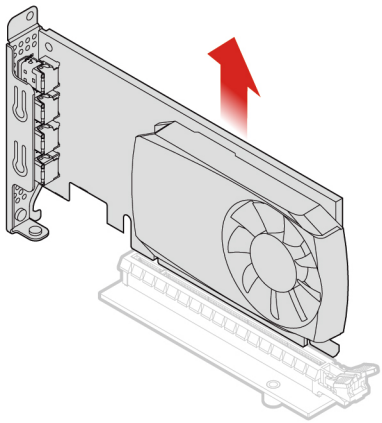

Figure 41. Removing the PCIe converter

c. Install the PCIe converter on the new graphics card.

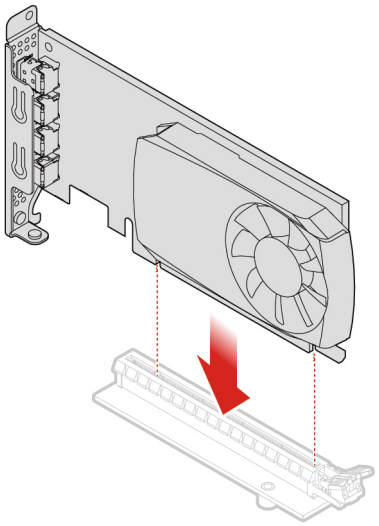

Figure 42. Installing the PCIe converter

d. Install the new graphics card into the computer.

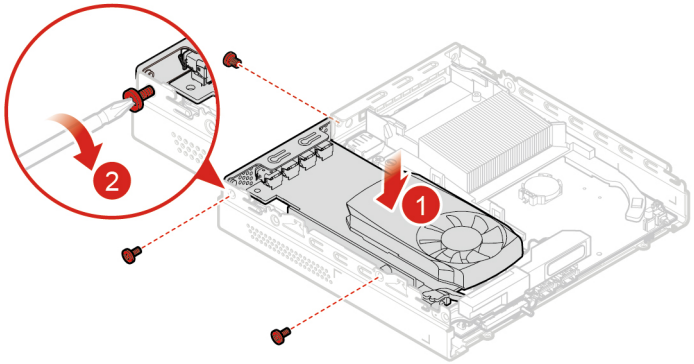

Figure 43. Installing the graphics card

- Type 2
  a. Remove the graphics card from the computer.

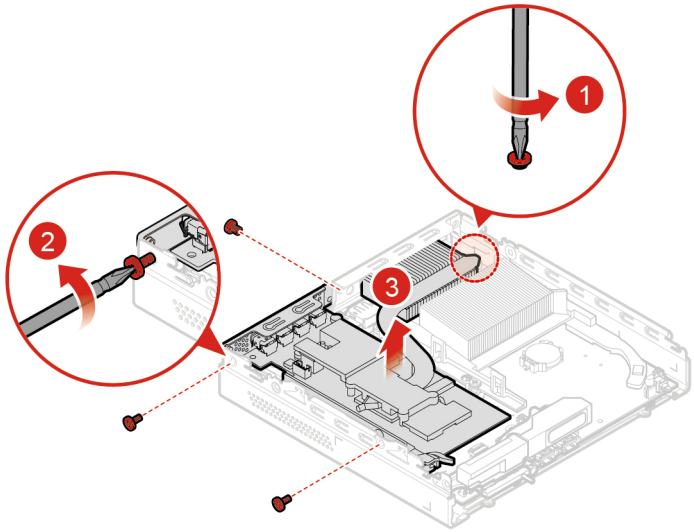

Figure 44. Removing the graphics card

  b. Remove the PCIe converter from the graphics card.

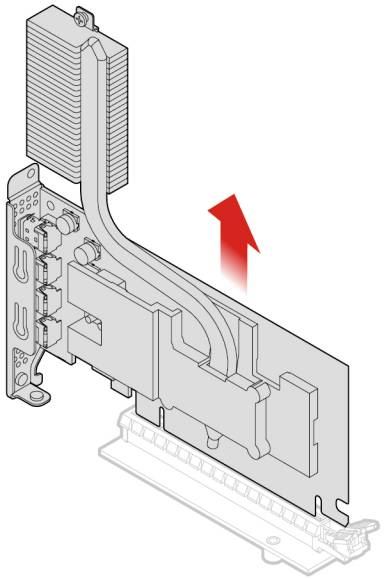

Figure 45. Removing the PCIe converter

c. Install the PCIe converter on the new graphics card.

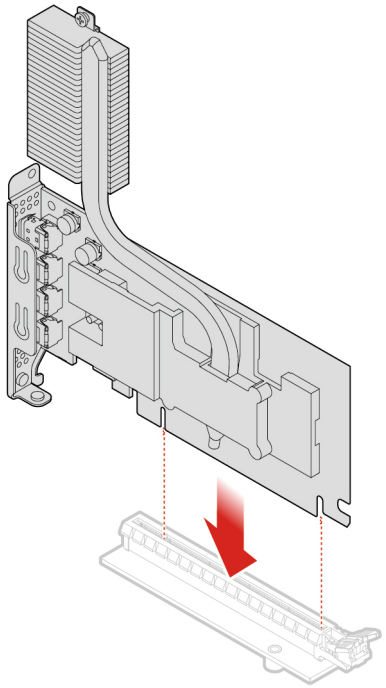

Figure 46. Installing the PCIe converter

d. Install the new graphics card into the computer.

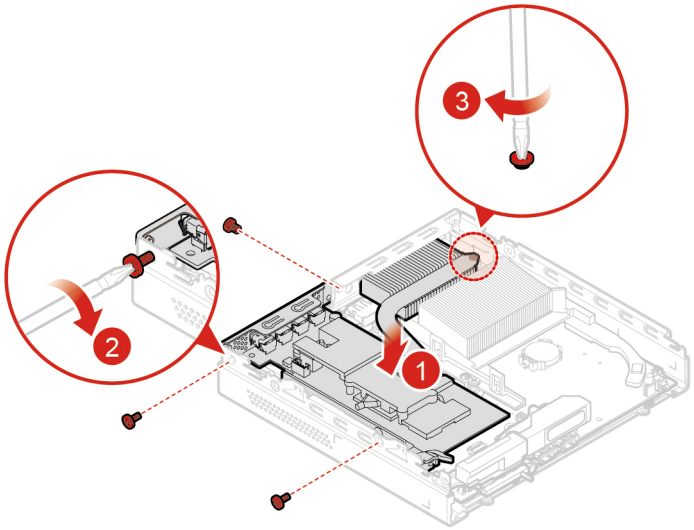

Figure 47. Installing the graphics card

6. Reinstall the computer cover and reconnect the cables. For details, see “Completing the parts replacement” on page 131.

System fan

Attention: Do not open your computer or attempt any repair before reading and understanding the Chapter 1 “Read this first: Important safety information” on page 1.

1. Remove any media from the drives and turn off all connected devices and the computer.
2. Disconnect all power cords from electrical outlets and disconnect all cables that are connected to the computer.
3. Remove the computer cover. For details, see “Computer cover” on page 95.
4. Remove the internal speaker if necessary. For details, see “Internal speaker” on page 100.
5. Disconnect the system fan cable from the system fan connector on the system board. See “Parts on the system board” on page 32.
6. Replace the system fan.
   a. Remove the system fan.

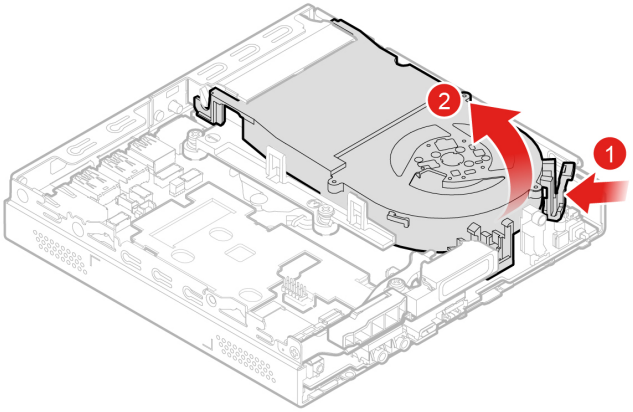

Figure 48. Removing the system fan

   b. Install the system fan.

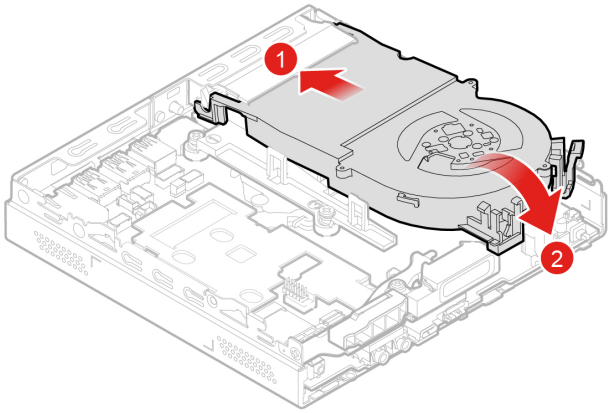

Figure 49. Installing the system fan

7. Connect the system fan cable to the system fan connector on the system board. See “Parts on the system board” on page 32.
8. Reinstall the computer cover and reconnect the cables. For details, see “Completing the parts replacement” on page 131.

Heat sink

Attention: Do not open your computer or attempt any repair before reading and understanding the Chapter 1 “Read this first: Important safety information” on page 1.

1. Remove any media from the drives and turn off all connected devices and the computer.
2. Disconnect all power cords from electrical outlets and disconnect all cables that are connected to the computer.
3. Remove the computer cover. For details, see “Computer cover” on page 95.
4. Remove the internal speaker if necessary. For details, see “Internal speaker” on page 100.
5. Remove the system fan. For details, see “System fan” on page 106.
6. Replace the heat sink.
   a. Remove the heat sink.

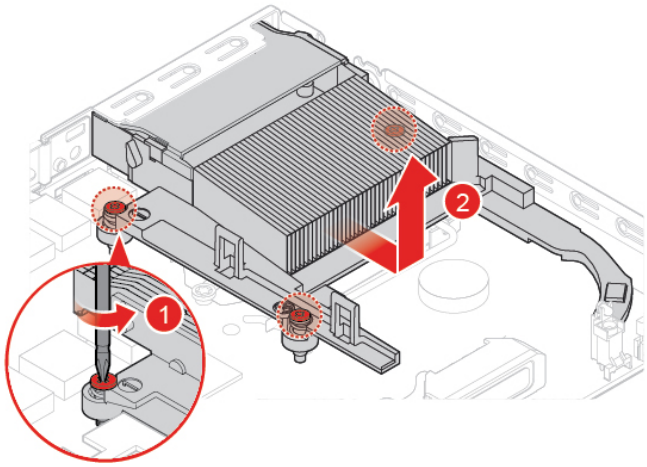

Figure 50. Removing the heat sink

   b. Install the heat sink.

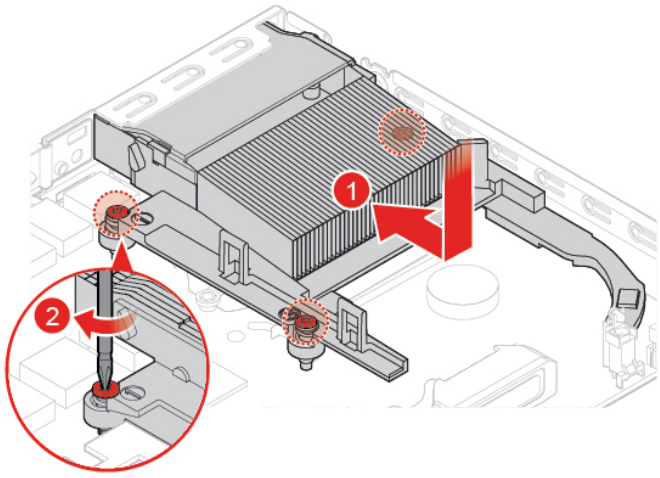

Figure 51. Installing the heat sink

7. Reinstall the computer cover and reconnect the cables. For details, see “Completing the parts replacement” on page 131.

Coin-cell battery

Attention: Do not open your computer or attempt any repair before reading and understanding the Chapter 1 “Read this first: Important safety information” on page 1.

Your computer has a special type of memory that maintains the date, time, and settings for built-in features, such as parallel connector assignments (configurations). A coin-cell battery keeps this information active when you turn off the computer.

The coin-cell battery normally requires no charging or maintenance throughout its life; however, no coin-cell battery lasts forever. If the coin-cell battery fails, the date and time information is lost.

1. Remove the computer cover. For details, see “Computer cover” on page 95.
2. Remove the internal speaker if necessary. For details, see “Internal speaker” on page 100.
3. Remove the system fan. For details, see “System fan” on page 106.
4. Replace the coin-cell battery.
   a. Release the coin-cell battery.

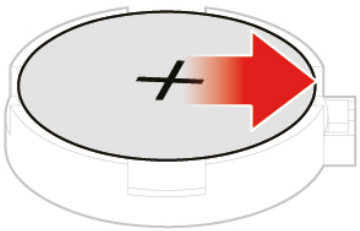

Figure 52. Releasing the coin-cell battery

b. Remove the coin-cell battery.

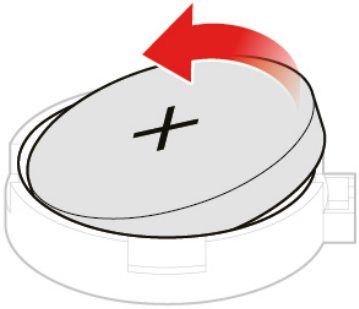

Figure 53. Removing the coin-cell battery

c. Install the coin-cell battery.

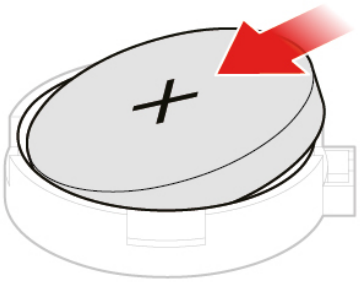

Figure 54. Installing the coin-cell battery

d. Press the coin-cell battery downward until it snaps into position.

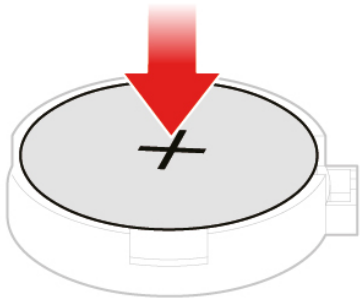

Figure 55. Pressing the coin-cell battery downward until it snaps into position

5. Reinstall the computer cover and reconnect the cables. For details, see “Completing the parts replacement” on page 131.

To dispose of the coin-cell battery, refer to the “Lithium coin-cell battery notice” topic in the *Safety and Warranty Guide*.

Microprocessor

Attention: Do not open your computer or attempt any repair before reading and understanding the Chapter 1 “Read this first: Important safety information” on page 1.

CAUTION:

The heat sink and microprocessor might be very hot. Before you open the computer cover, turn off the computer and wait several minutes until the computer is cool.

1. Remove any media from the drives and turn off all connected devices and the computer.
2. Disconnect all power cords from electrical outlets and disconnect all cables that are connected to the computer.
3. Remove the computer cover. For details, see “Computer cover” on page 95.
4. Remove the internal speaker if necessary. For details, see “Internal speaker” on page 100.
5. Remove the system fan. For details, see “System fan” on page 106.
6. Remove the heat sink. For details, see “Heat sink” on page 107.
7. Replace the microprocessor.

   Notes:

   - Your microprocessor and socket might look different from the one illustrated.
   - Touch only the edges of the microprocessor. Do not touch the gold contacts on the bottom.
   - Do not drop anything onto the microprocessor socket while it is exposed. The socket pins must be kept as clean as possible.

a. Unlock the microprocessor socket retainer.

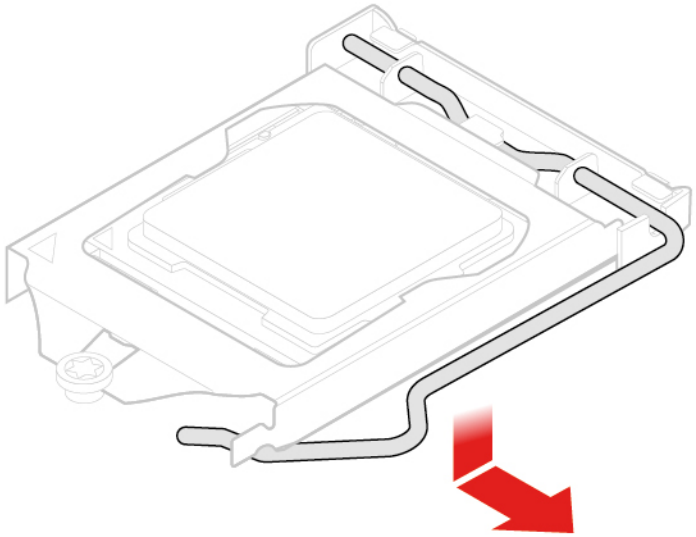

Figure 56. Unlocking the microprocessor socket retainer

b. Pivot the microprocessor socket upward.

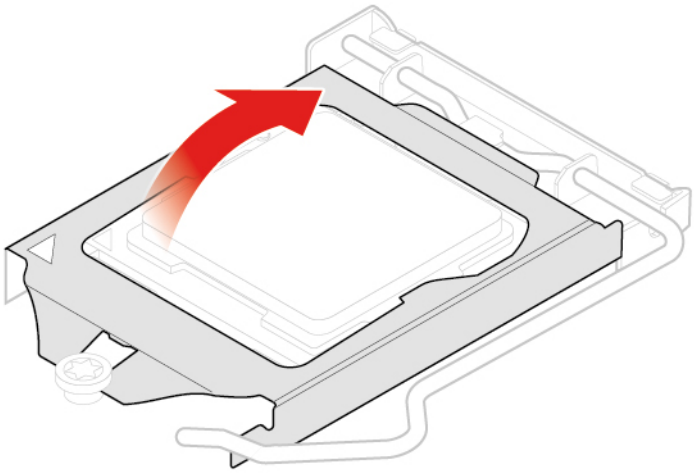

Figure 57. Pivoting the microprocessor socket upward

c. Remove the microprocessor.

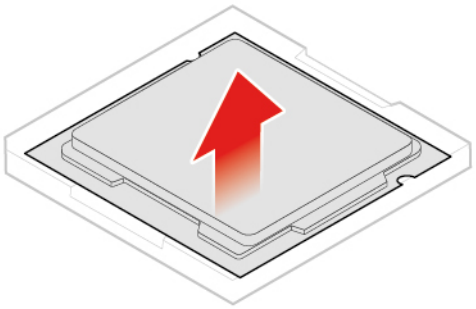

Figure 58. Removing the microprocessor

d. Install the microprocessor.

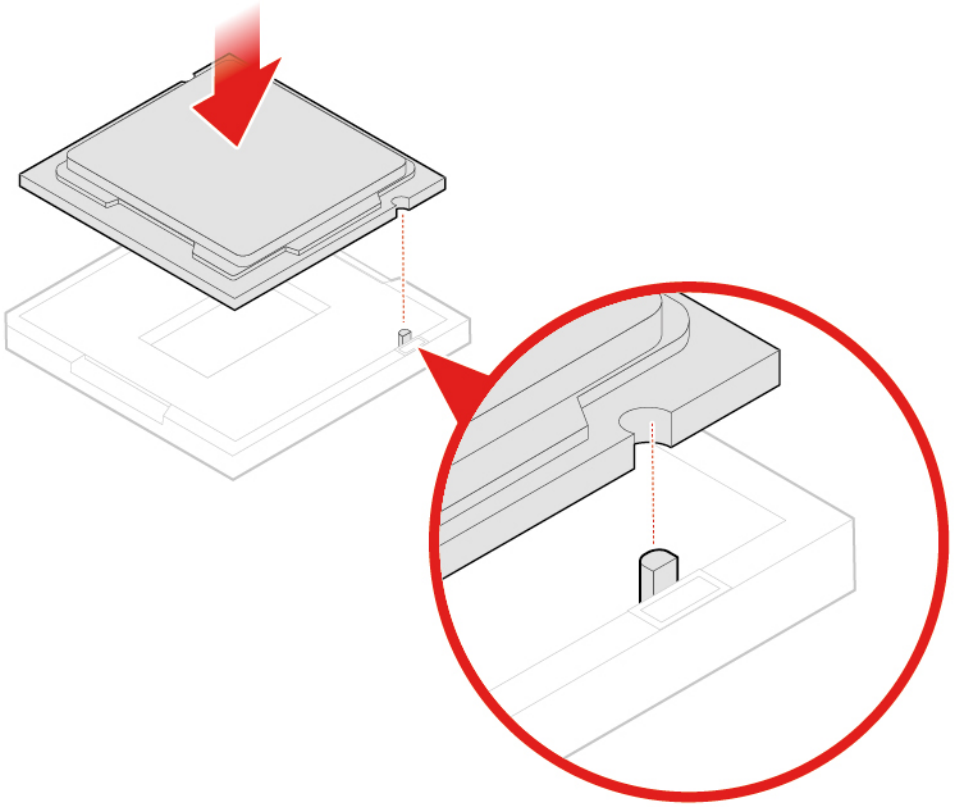

Figure 59. Installing the microprocessor

e. Pivot the microprocessor socket downward.

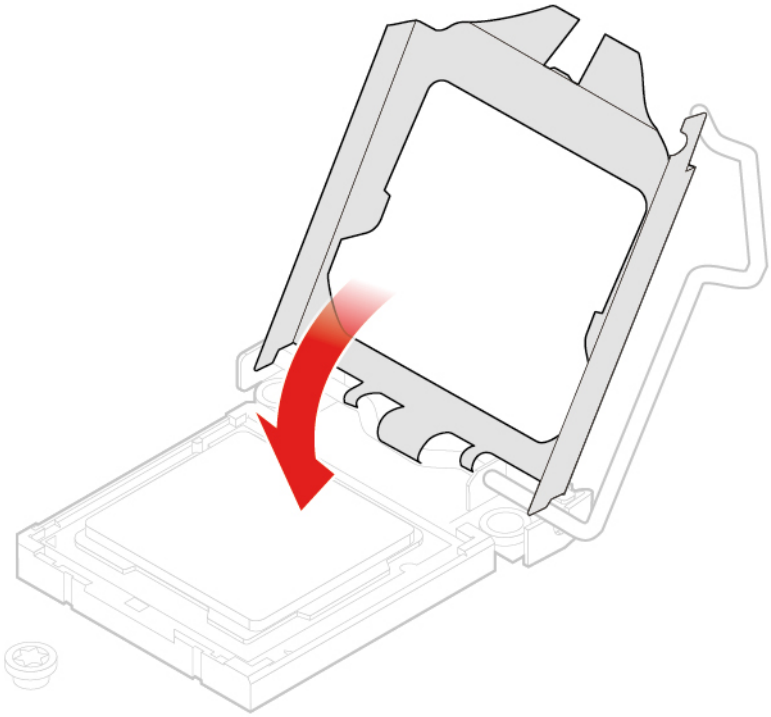

Figure 60. Pivoting the microprocessor socket downward

f. Lock the microprocessor socket retainer.

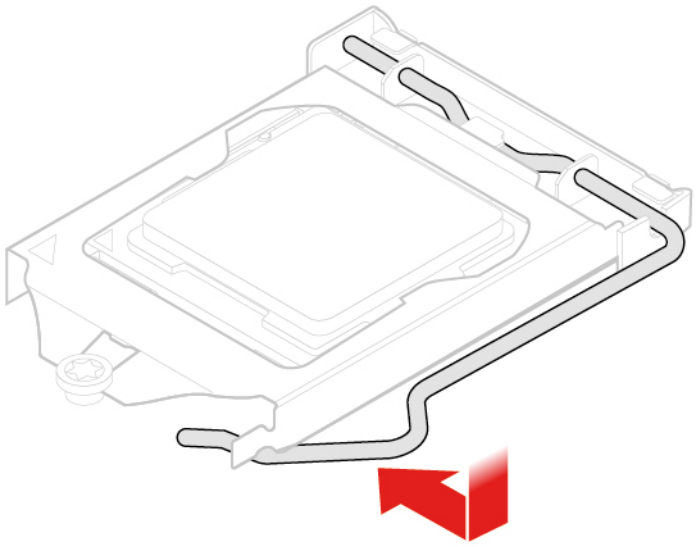

Figure 61. Locking the microprocessor socket retainer

8. Reinstall the computer cover and reconnect the cables. For details, see “Completing the parts replacement” on page 131.

Wi-Fi antennas

Attention: Do not open your computer or attempt any repair before reading and understanding the Chapter 1 “Read this first: Important safety information” on page 1.

Replacing the front Wi-Fi antenna

1. Remove any media from the drives and turn off all connected devices and the computer.
2. Disconnect all power cords from electrical outlets and disconnect all cables that are connected to the computer.
3. Remove the computer cover. For details, see “Computer cover” on page 95.
4. Remove the storage drive or graphics card. For details, see “Storage drive” on page 96 or “Graphics card” on page 101.
5. Replace the front Wi-Fi antenna.
   a. Disconnect the front Wi-Fi antenna cable from the Wi-Fi card.

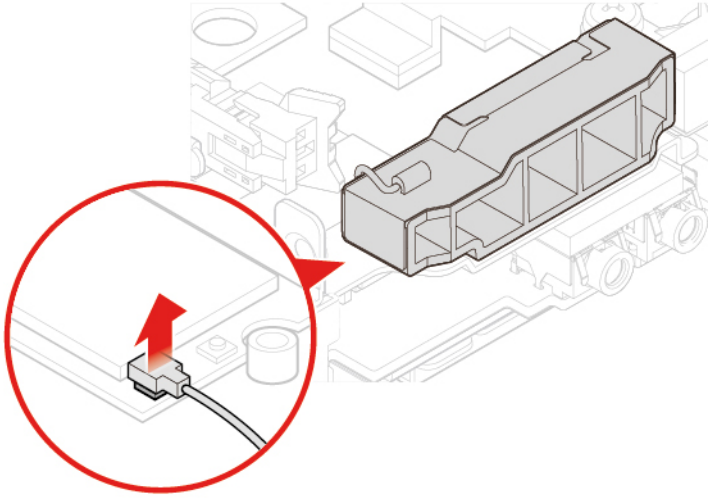

Figure 62. Disconnecting the front Wi-Fi antenna cable from the Wi-Fi card

   b. Remove the front Wi-Fi antenna.

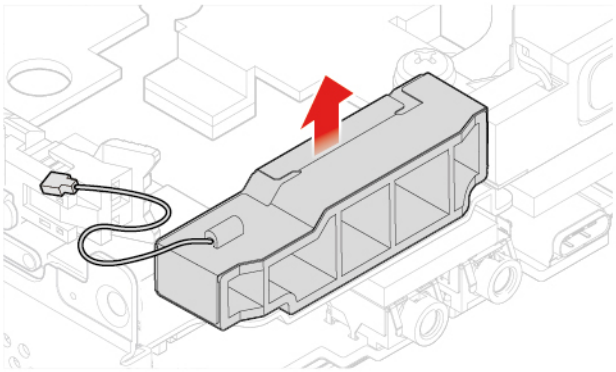

Figure 63. Removing the front Wi-Fi antenna

c. Install the front Wi-Fi antenna.

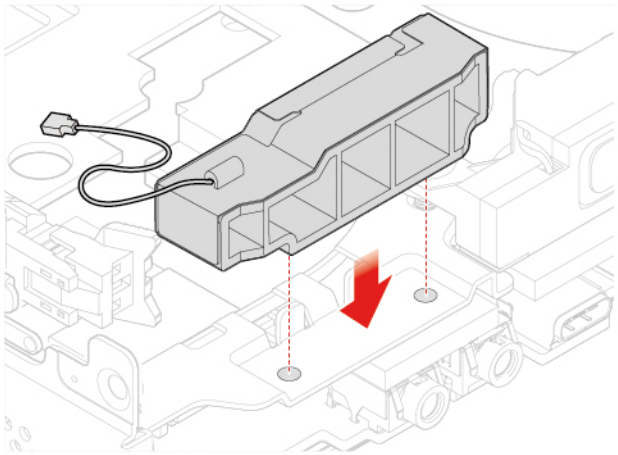

Figure 64. Installing the front Wi-Fi antenna

d. Connect the front Wi-Fi antenna cable to the Wi-Fi card.

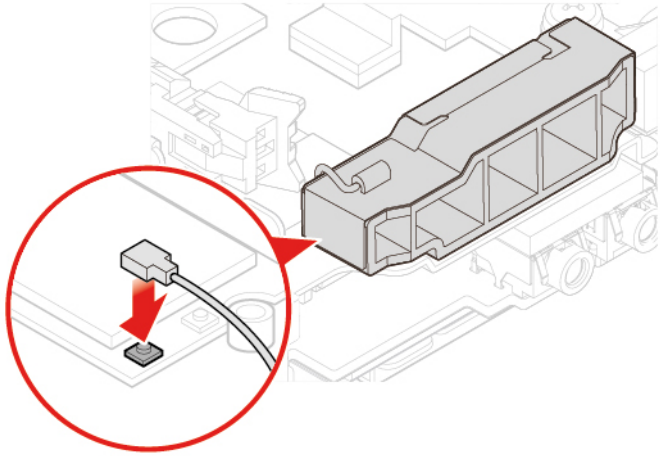

Figure 65. Connecting the front Wi-Fi antenna cable to the Wi-Fi card

6. Reinstall the computer cover and reconnect the cables. For details, see “Completing the parts replacement” on page 131.

Replacing the rear Wi-Fi antenna

1. Remove any media from the drives and turn off all connected devices and the computer.
2. Disconnect all power cords from electrical outlets and disconnect all cables that are connected to the computer.
3. Remove the computer cover. For details, see “Computer cover” on page 95.
4. Remove the storage drive or graphics card. For details, see “Storage drive” on page 96 or “Graphics card” on page 101.
5. Disconnect the rear Wi-Fi antenna cable from the Wi-Fi card.
6. Replace the rear Wi-Fi antenna.

   Note: Record the cable routing before removing the rear Wi-Fi antenna cable.

a. Remove the rear Wi-Fi antenna.

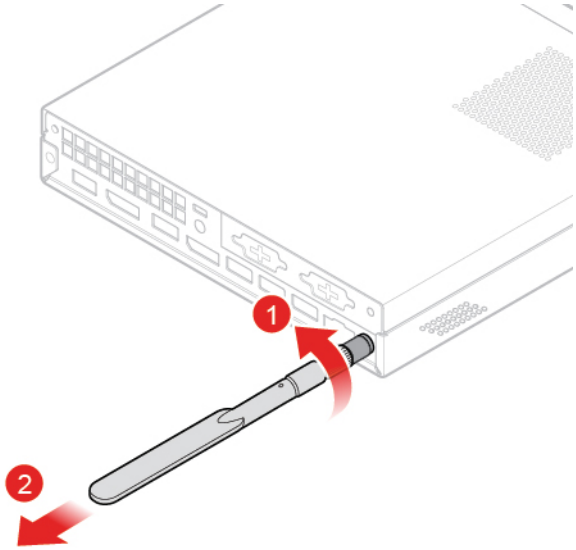

Figure 66. Removing the rear Wi-Fi antenna

b. Remove the antenna cover that secures the rear Wi-Fi antenna cable.

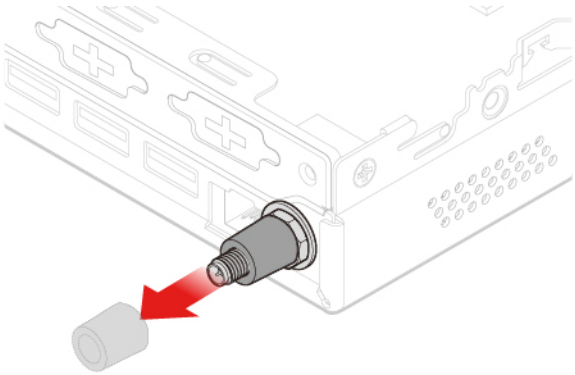

Figure 67. Removing the antenna cover that secures the rear Wi-Fi antenna cable

c. Remove the rear Wi-Fi antenna cable.

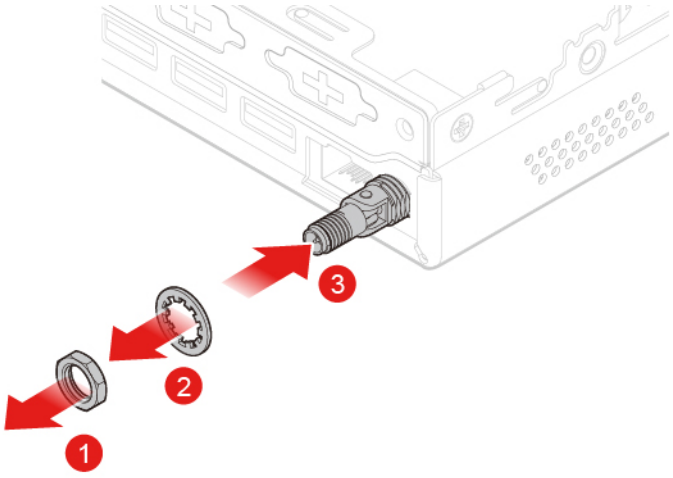

Figure 68. Removing the rear Wi-Fi antenna cable

d. Install the rear Wi-Fi antenna cable.

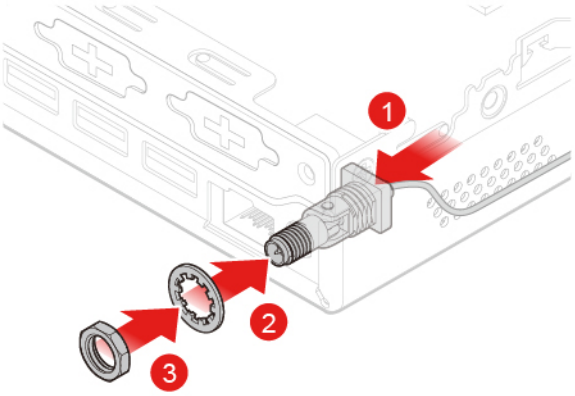

Figure 69. Installing the rear Wi-Fi antenna cable

e. Install the antenna cover to secure the rear Wi-Fi antenna cable.

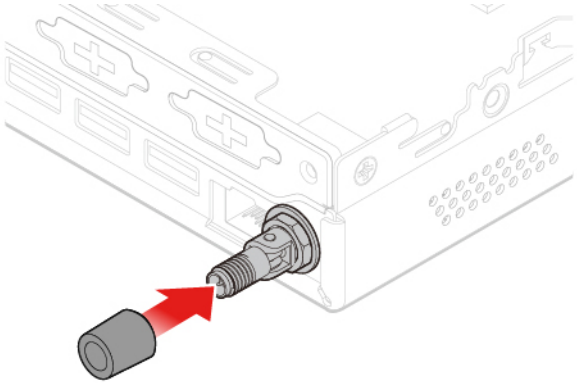

Figure 70. Installing the antenna cover to secure the rear Wi-Fi antenna cable

f. Install the rear Wi-Fi antenna.

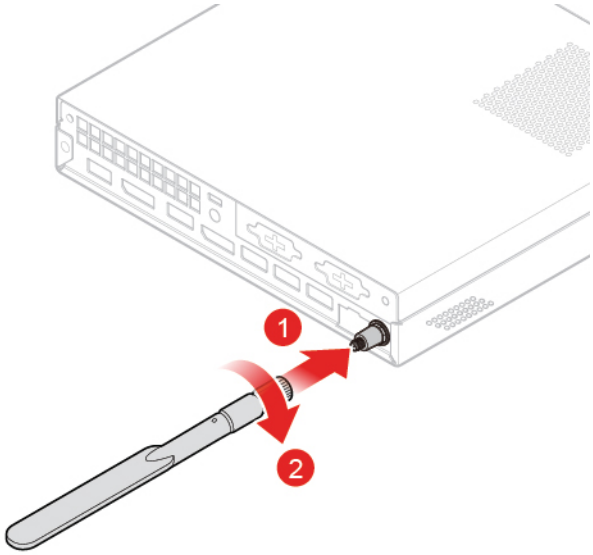

Figure 71. Installing the rear Wi-Fi antenna

7. Connect the rear Wi-Fi antenna cable to the Wi-Fi card.
8. Reinstall the computer cover and reconnect the cables. For details, see “Completing the parts replacement” on page 131.

Antenna bracket

Attention: Do not open your computer or attempt any repair before reading and understanding the Chapter 1 “Read this first: Important safety information” on page 1.

1. Remove any media from the drives and turn off all connected devices and the computer.
2. Disconnect all power cords from electrical outlets and disconnect all cables that are connected to the computer.
3. Remove the computer cover. For details, see “Computer cover” on page 95.
4. Remove the storage drive if necessary. For details, see “Storage drive” on page 96.

5. Remove the advanced speaker if necessary. For details, see “Advanced speaker” on page 101.
6. Remove the front Wi-Fi antenna. For details, see “Wi-Fi antennas” on page 114.
7. Replace the antenna bracket.
   a. Remove the antenna bracket.

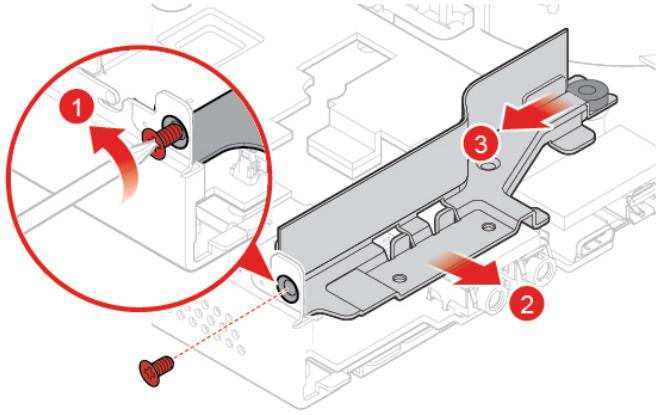

Figure 72. Removing the antenna bracket

   b. Install the antenna bracket.

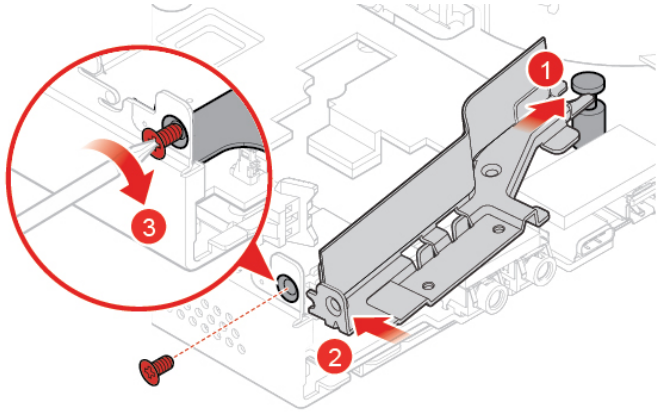

Figure 73. Installing the antenna bracket

8. Reinstall the computer cover and reconnect the cables. For details, see “Completing the parts replacement” on page 131.

Wi-Fi card

Attention: Do not open your computer or attempt any repair before reading and understanding the Chapter 1 “Read this first: Important safety information” on page 1.

1. Remove any media from the drives and turn off all connected devices and the computer.
2. Disconnect all power cords from electrical outlets and disconnect all cables that are connected to the computer.
3. Remove the computer cover. For details, see “Computer cover” on page 95.
4. Remove the system fan. For details, see “System fan” on page 106.
5. Remove the storage drive. For details, see “Storage drive” on page 96.

6. Depending on your computer model, refer to one of the following to replace the Wi-Fi card.
   - Type 1
     a. Remove the Wi-Fi card shield.

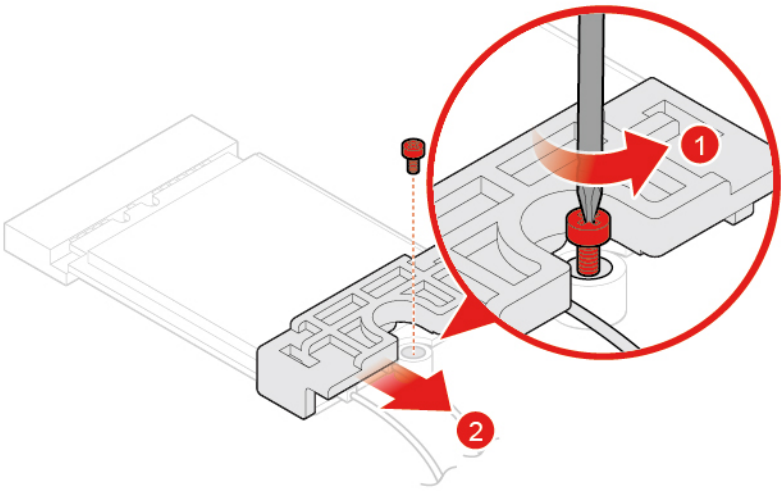

Figure 74. Removing the Wi-Fi card shield

     b. Disconnect the Wi-Fi antenna cables.

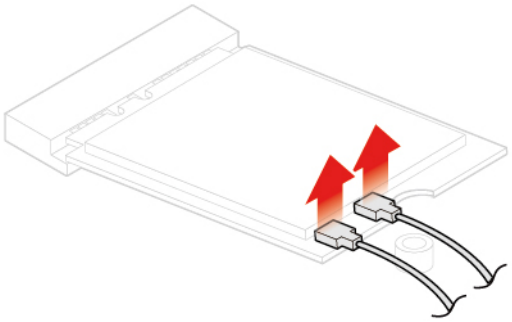

Figure 75. Disconnecting the Wi-Fi antenna cables

     c. Remove the Wi-Fi card.

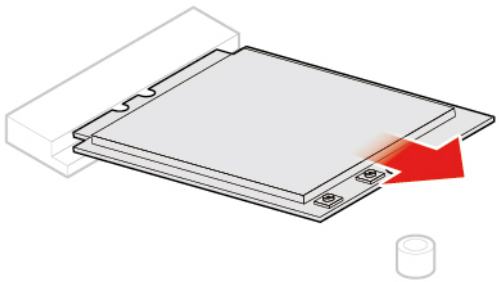

Figure 76. Removing the Wi-Fi card

d. Install the Wi-Fi card.

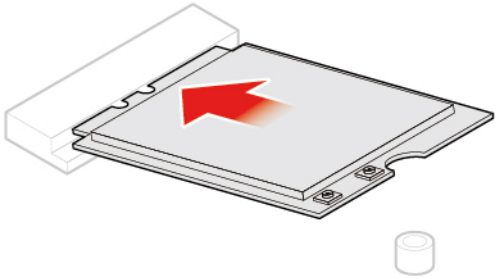

Figure 77. Installing the Wi-Fi card

e. Connect the Wi-Fi antenna cables.

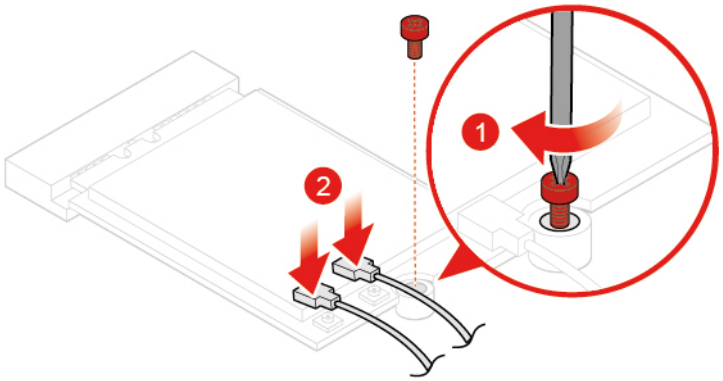

Figure 78. Connecting the Wi-Fi antenna cables

f. Install the Wi-Fi card shield.

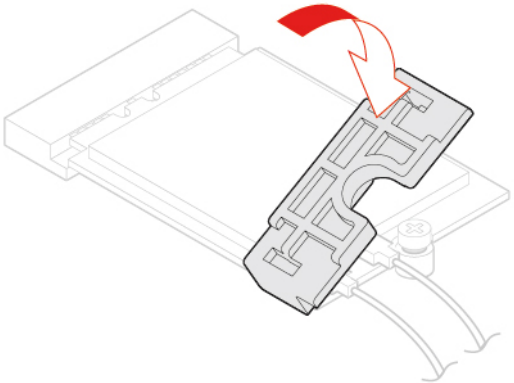

Figure 79. Installing the Wi-Fi card shield

- Type 2

a. Remove the Wi-Fi card shield.

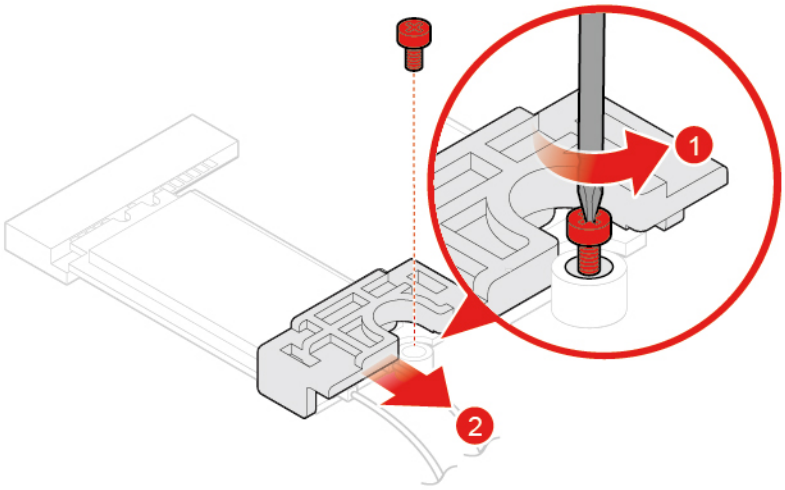

Figure 80. Removing the Wi-Fi card shield

b. Disconnect the Wi-Fi antenna cables.

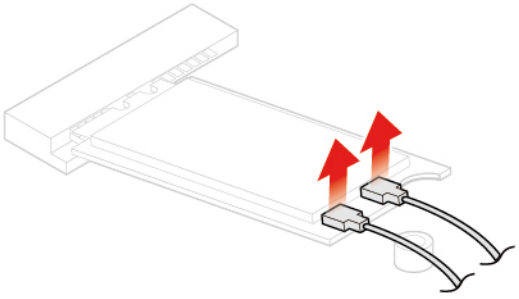

Figure 81. Disconnecting the Wi-Fi antenna cables

c. Remove the Wi-Fi card.

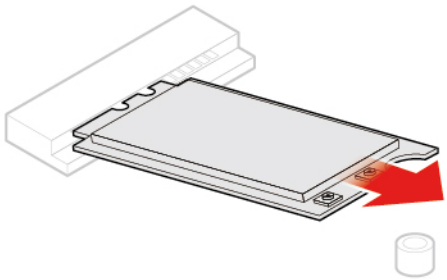

Figure 82. Removing the Wi-Fi card

d. Install the Wi-Fi card.

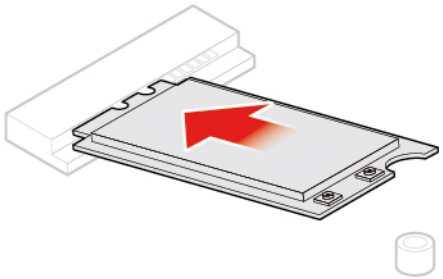

Figure 83. Installing the Wi-Fi card

e. Connect the Wi-Fi antenna cables.

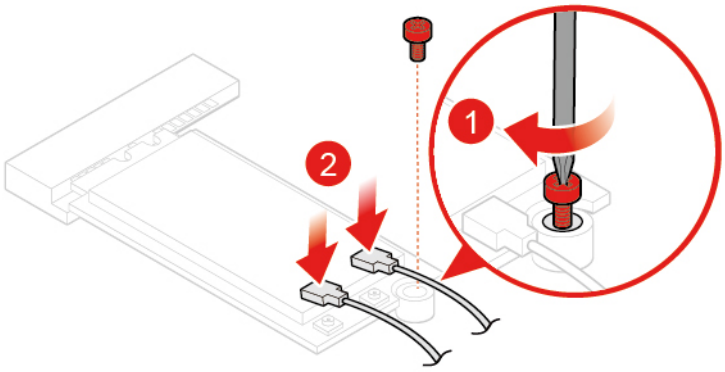

Figure 84. Connecting the Wi-Fi antenna cables

f. Install the Wi-Fi card shield.

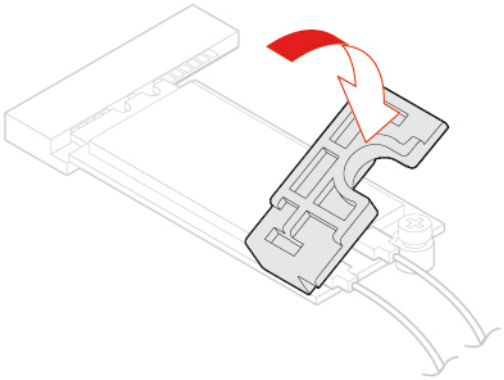

Figure 85. Installing the Wi-Fi card shield

7. Reinstall the computer cover and reconnect the cables. For details, see “Completing the parts replacement” on page 131.

Bottom cover

Attention: Do not open your computer or attempt any repair before reading and understanding the Chapter 1 “Read this first: Important safety information” on page 1.

1. Remove any media from the drives and turn off all connected devices and the computer.
2. Disconnect all power cords from electrical outlets and disconnect all cables that are connected to the computer.
3. Remove the computer cover. For details, see “Computer cover” on page 95.
4. Replace the bottom cover.
   a. Remove the bottom cover.

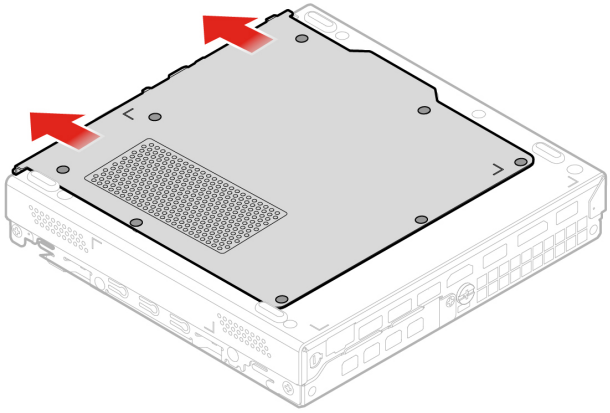

Figure 86. Removing the bottom cover

   b. Install the bottom cover.

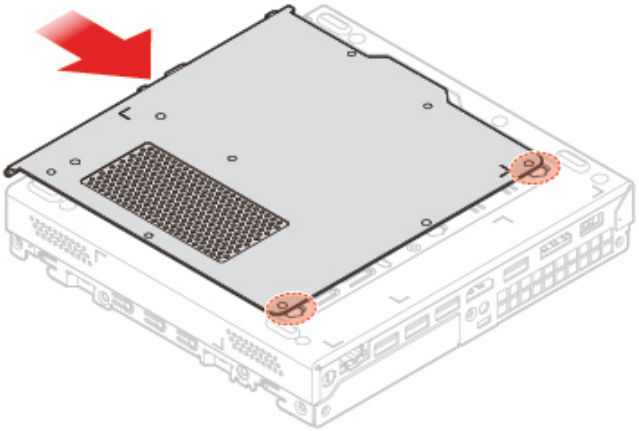

Figure 87. Installing the bottom cover

5. Reinstall the computer cover and reconnect the cables. For details, see “Completing the parts replacement” on page 131.

Memory module

Attention: Do not open your computer or attempt any repair before reading and understanding the Chapter 1 “Read this first: Important safety information” on page 1.

If your computer supports one memory module, install the module into the DIMM 1 slot. If your computer supports two memory modules, install one memory module into the DIMM 1 slot first and then install the other into the DIMM 2 slot. See “Parts on the system board” on page 32 for the locations of the slots.

1. Remove any media from the drives and turn off all connected devices and the computer.
2. Disconnect all power cords from electrical outlets and disconnect all cables that are connected to the computer.
3. Remove the computer cover. For details, see “Computer cover” on page 95.
4. Remove the bottom cover. For details, see “Bottom cover” on page 124.
5. Replace the memory module.
   a. Open the memory module retainer.

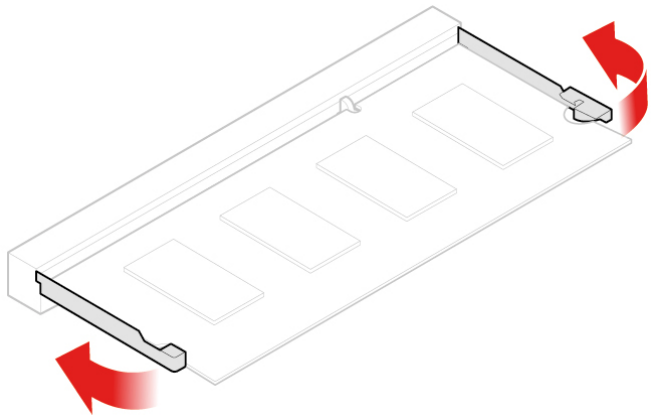

Figure 88. Opening the memory module retainer

   b. Remove the memory module.

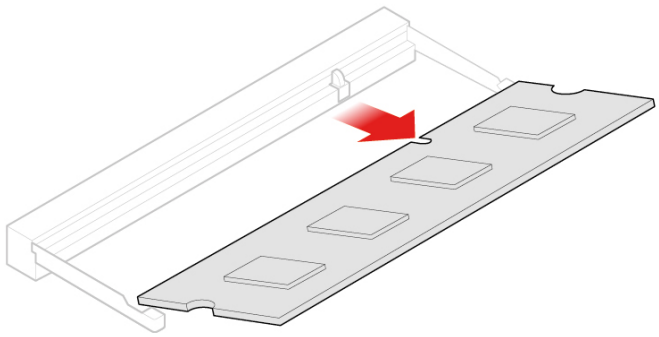

Figure 89. Removing the memory module

c. Install the memory module.

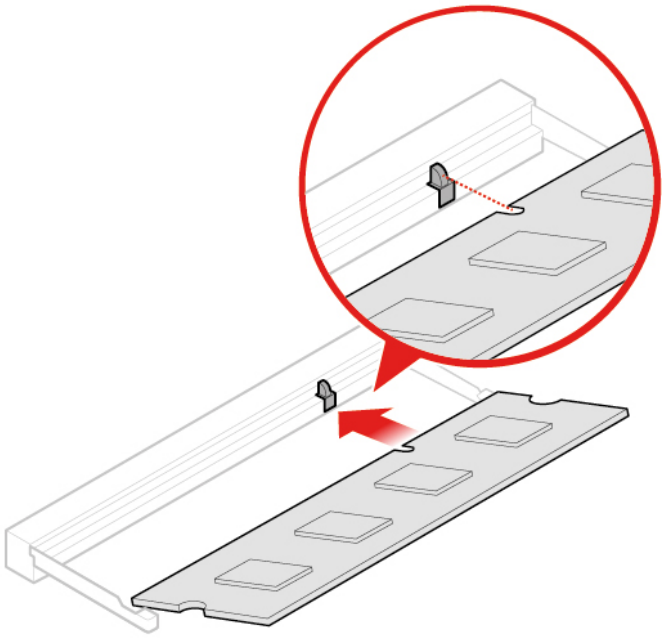

Figure 90. Installing the memory module

d. Close the memory module retainer.

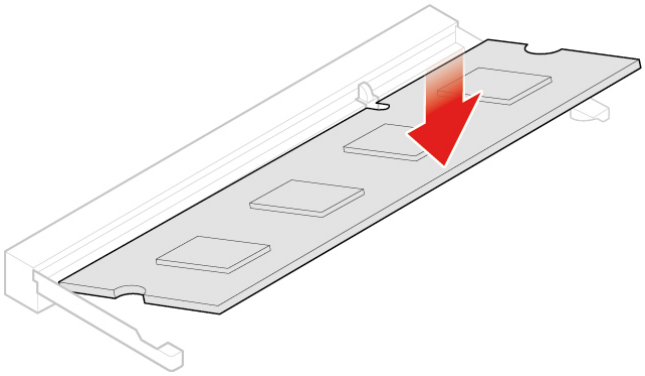

Figure 91. Closing the memory module retainer

6. Reinstall the computer cover and reconnect the cables. For details, see “Completing the parts replacement” on page 131.

M.2 storage drive

Attention: Do not open your computer or attempt any repair before reading and understanding the Chapter 1 “Read this first: Important safety information” on page 1.

The instructions on how to install or replace a M.2 solid-state drive also apply to the Intel® Optane™ memory. Before replacing the Intel Optane memory, ensure that you disable the Intel Optane memory from the Intel Rapid Storage Technology (Intel RST) Console. Otherwise, all data on the storage drive will be lost. For more information about the Optane memory, go to:
https://www.intel.com/content/www/us/en/support/memory-and-storage/intel- optane-memory/000023989.html

If your computer supports one M.2 storage drive, install the drive into the M.2 storage drive slot 1. If your computer supports two M.2 storage drives, install one drive into the M.2 storage drive slot 1 first and then install the other into the slot 2. See “Parts on the system board” on page 32 for the locations of the slots.

1. Remove any media from the drives and turn off all connected devices and the computer.
2. Disconnect all power cords from electrical outlets and disconnect all cables that are connected to the computer.
3. Remove the computer cover. For details, see “Computer cover” on page 95.
4. Remove the bottom cover. For details, see “Bottom cover” on page 124.
5. Replace the M.2 storage drive.
   a. Unlock the M.2 storage drive clip.

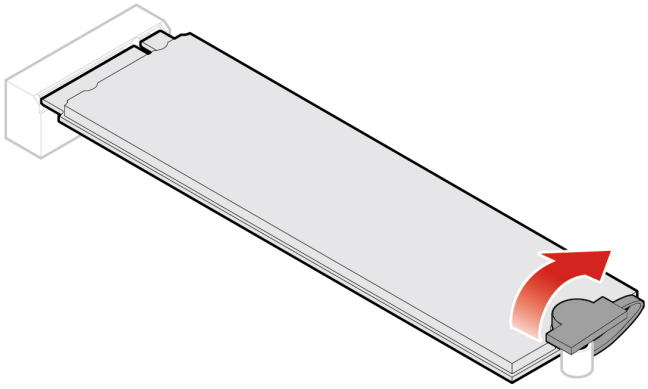

Figure 92. Unlocking the M.2 storage drive clip

   b. Remove the M.2 storage drive.

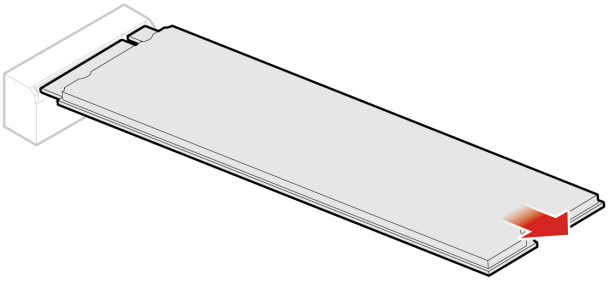

Figure 93. Removing the M.2 storage drive

c. Install the M.2 storage drive.

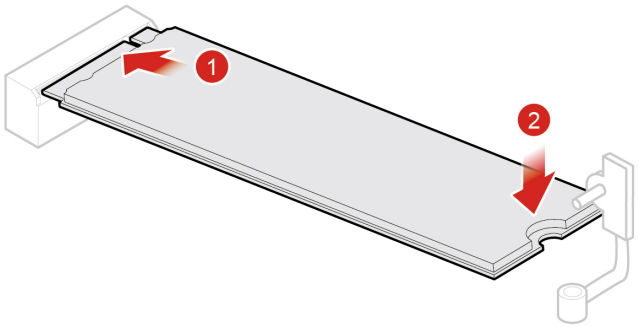

Figure 94. Installing the M.2 storage drive

d. Lock the M.2 storage drive clip.

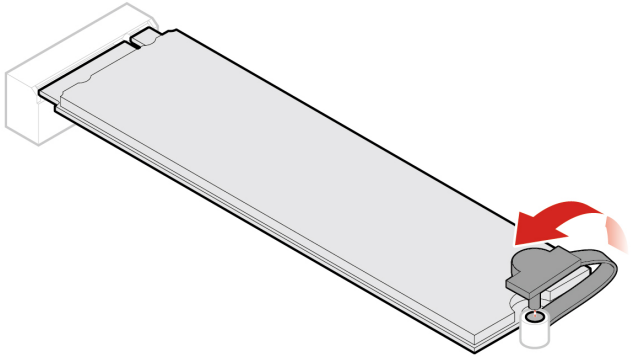

Figure 95. Locking the M.2 storage drive clip

6. Reinstall the computer cover and reconnect the cables. For details, see “Completing the parts replacement” on page 131.

System board and chassis

Attention: Do not open your computer or attempt any repair before reading and understanding the Chapter 1 “Read this first: Important safety information” on page 1.

Note: Each computer has a unique Vital Product Data (VPD) code stored in the nonvolatile memory on the system board. After you replace the system board, the VPD must be updated. To update the VPD, see “Updating and recovering the BIOS” on page 60.

1. Remove any media from the drives and turn off all connected devices and the computer.
2. Disconnect all power cords from electrical outlets and disconnect all cables that are connected to the computer.
3. Remove the computer cover. For details, see “Computer cover” on page 95.
4. Remove the storage drive or graphics card. For details, see “Storage drive” on page 96 or “Graphics card” on page 101.
5. Remove the internal speaker if necessary. For details, see “Internal speaker” on page 100.
6. Remove the advanced speaker if necessary. For details, see “Advanced speaker” on page 101.
7. Remove the system fan. For details, see “System fan” on page 106.
8. Remove the heat sink. For details, see “Heat sink” on page 107.

9. Remove the microprocessor. For details, see “Microprocessor” on page 110.
10. Remove the Wi-Fi antennas. For details, see “Wi-Fi antennas” on page 114.
11. Remove the antenna bracket. For details, see “Antenna bracket” on page 118.
12. Remove the Wi-Fi card. For details, see “Wi-Fi card” on page 119.
13. Remove the bottom cover. For details, see “Bottom cover” on page 124.
14. Remove the memory module. For details, see “Memory module” on page 124.
15. Remove the M.2 solid-state drive. For details, see “M.2 storage drive” on page 126.
16. Record the cable routing and cable connections, and then disconnect all cables from the system board.
17. Replace the system board and the chassis.

    Note: Carefully handle the system board by its edges.

    a. Remove the screws that secure the system board.

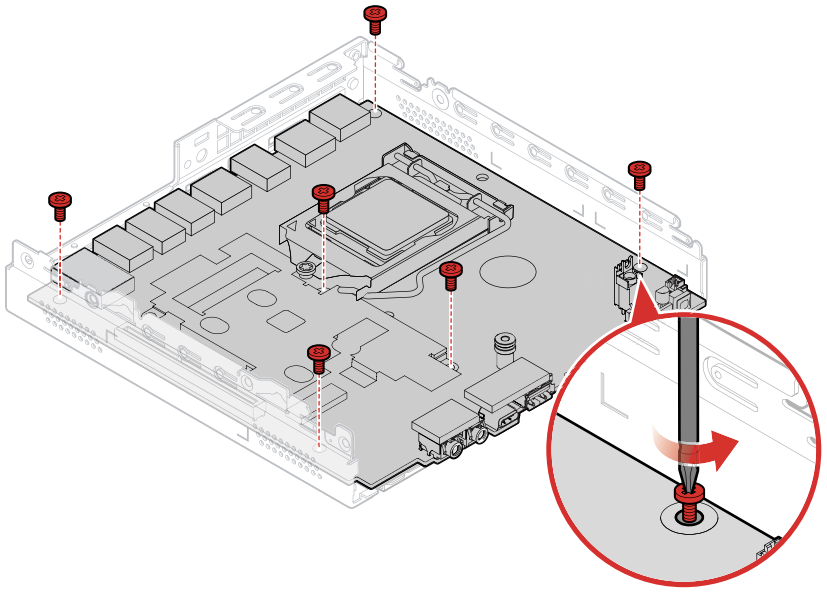

Figure 96. Removing the screws that secure the system board

b. Remove the system board.

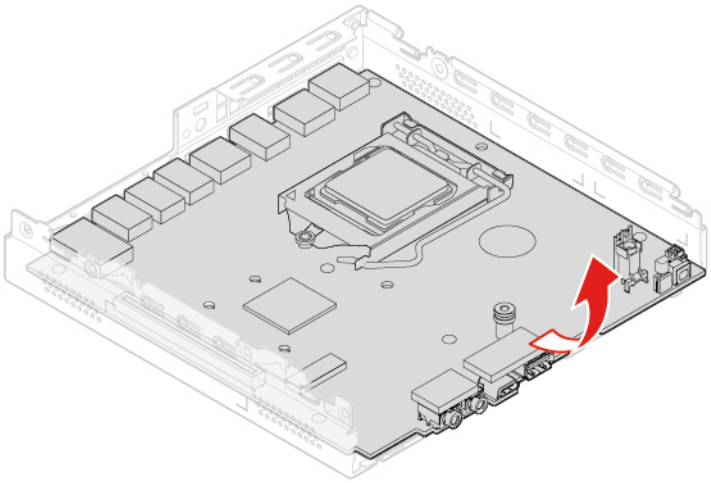

Figure 97. Removing the system board

c. Install the system board.

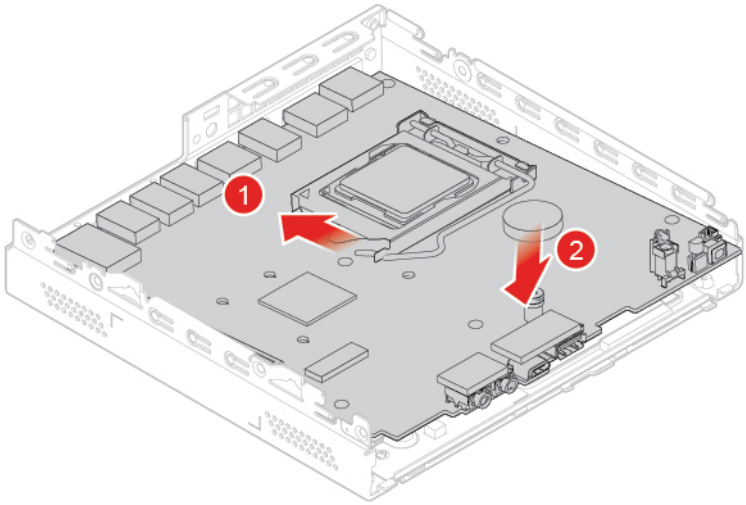

Figure 98. Installing the system board

d. Install the screws to secure the system board.

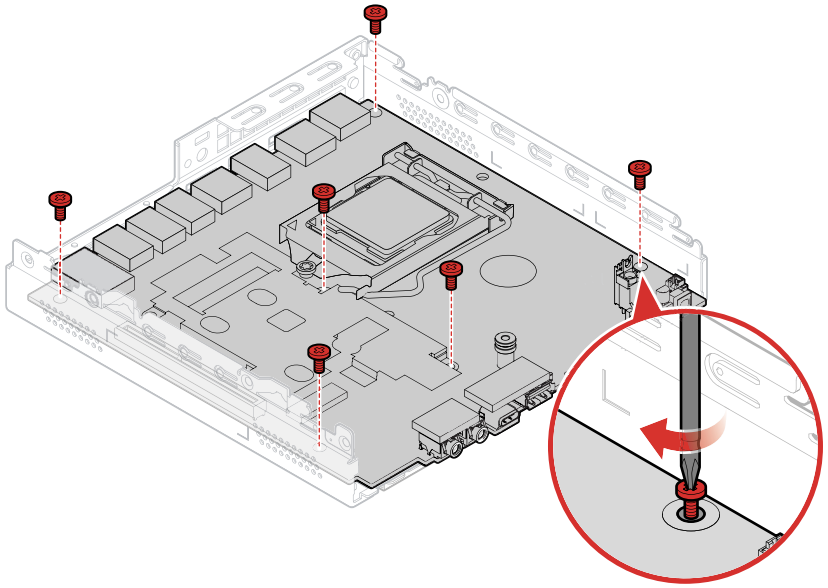

Figure 99. Installing the screws to secure the system board

18. Route all the cables that you disconnected from the failing system board, and then reconnect the cables to the new system board. See “Parts on the system board” on page 32.
19. Reinstall the computer cover and reconnect the cables. For details, see “Completing the parts replacement” on page 131.

The failing system board must be returned with a microprocessor socket cover to protect the pins during shipping and handling.

To install the microprocessor socket cover, do the following:

1. After you have removed the microprocessor from the failing system board, close the microprocessor retainer. Then, put the lever to the locked position to secure the retainer in place.
2. Note the orientation of the socket cover, and install one side of the socket cover into the microprocessor socket. Carefully press the other side of the socket cover downward until the socket cover snaps into position.
3. Carefully check the four corners of the socket cover to ensure that the cover is seated securely.
4. Follow any additional instructions that are included with the replacement part you received.

Completing the parts replacement

CAUTION:



After replacing a CRU, reinstall all protective covers, including the computer cover, before connecting power and operating the computer. This action is important to help prevent unexpected electrical shock and help ensure the containment of an unexpected fire that could happen under extremely rare conditions.

After completing the installation or replacement for all parts, reinstall the computer cover and reconnect cables. Depending on the parts you installed or replaced, you might need to confirm the updated information in the Setup Utility program. Refer to “Using the Setup Utility program” on page 55.

To reinstall the computer cover and reconnect cables to your computer, do the following:

1. Ensure that all components have been reassembled correctly and that no tools or loose screws are left inside your computer. See “Parts on the system board” on page 32 for the locations of various components in your computer.
2. Ensure that the cables are routed correctly before reinstalling the computer cover. Keep cables clear of the hinges and sides of the computer chassis to avoid interference with reinstalling the computer cover.

3. Reinstall the computer cover.

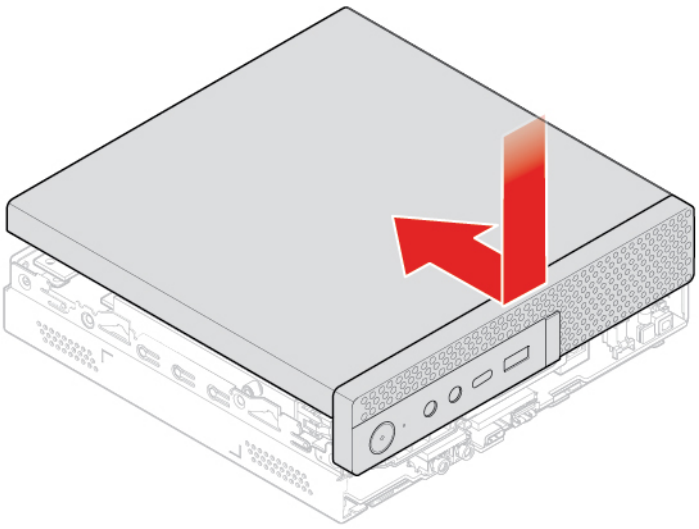

Figure 100. Installing the computer cover

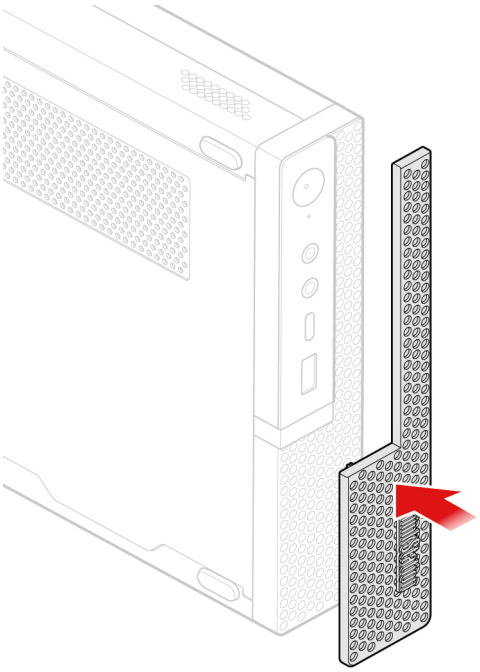

Figure 101. Reinstalling the dust shield

4. Install the screw to secure the computer cover.
5. Place the computer in an upright position.
6. If there is any locking device available, lock the computer cover. See “Tips on using the computer” on page 51.
7. Reconnect the external cables and power cords to the corresponding connectors on the computer. See “Hardware locations” on page 29.

8. Update the configuration of your computer if necessary. See “Using the Setup Utility program” on page 55.
9. If a newly installed hardware component does not work correctly, update the device driver. See “Keeping your computer current” on page 50.

Chapter 10. Getting information, help, and service

This chapter provides information about getting help and support from Lenovo.

Information resources

You can use the information in this section to access useful resources relating to your computing needs.

Accessing the user guide in various languages

To access the user guide in various languages, go to:
https://support.lenovo.com

Windows help system

The Windows help system provides you with detailed information about using the Windows operating system.

Note: Using the help for Windows 10 requires an active Internet connection.

To access the Windows help system, do the following:

1. Click the Start button to open the Start menu.
2. Click **Get Help**.

Safety and warranty

The *Safety and Warranty Guide* provided with your computer contains important safety information, product warranty terms, and legal notices. Ensure that you read and understand all safety information in the *Safety and Warranty Guide* before using your computer.

In addition, read and understand Chapter 1 “Read this first: Important safety information” on page 1 before using your computer. This preface provides additional safety information that applies to topics and tasks described in this *User Guide*.

Lenovo Web site

The Lenovo Web site (https://www.lenovo.com) provides up-to-date information and services to help you buy, upgrade, and maintain your computer. You also can do the following:

- Shop for desktop and notebook computers, monitors, projectors, upgrades, and accessories for your computer, and special offers.
- Purchase additional services, such as support for hardware, operating systems, programs, network setup and configuration, and custom installations.
- Purchase upgrades and extended hardware repair services.
- Access troubleshooting and support information for your computer model and other supported products.
- Find a Service Provider located near you.

Lenovo Support Web site

Technical support information is available on the Lenovo Support Web site at:
https://support.lenovo.com

© Copyright Lenovo 2018, 2019

This Web site is updated with the latest support information such as the following:

- Drivers and software
- Diagnostic solutions
- Product and service warranty
- Product and parts details
- User guides and manuals
- Knowledge base and frequently asked questions
- Lenovo Support phone numbers

Help and service

This section provides information about obtaining help and service.

Calling for service

During the warranty period, you can get help and information by telephone through the Customer Support Center. For the warranty period of your computer, go to https://www.lenovo.com/warranty-status. For a list of Lenovo Support phone numbers, go to https://pcsupport.lenovo.com/supportphonelist.

Note: Phone numbers are subject to change without notice. If the number for your country or region is not provided, contact your Lenovo reseller or Lenovo marketing representative.

The following services are available during the warranty period:

- **Problem determination** - Trained service personnel are available to assist you with determining a hardware problem and deciding what action is necessary to fix the problem.
- **Hardware repair** - If the problem is caused by hardware under warranty, trained service personnel are available to provide the applicable level of service.
- **Engineering Change management** - There might be changes that are required after a product has been sold. Lenovo or your reseller will make selected Engineering Changes (ECs) that apply to your hardware available.

These items are not covered by the warranty:
- Replacement or use of parts not manufactured for or by Lenovo or non-warranted Lenovo parts
- Identification of software problem sources
- Configuration of BIOS as part of an installation or upgrade
- Changes, modifications, or upgrades to device drivers
- Installation and maintenance of network operating systems (NOS)
- Installation and maintenance of programs

If possible, be at your computer when you call. Have the following information available:
- Machine type and model
- Serial numbers of your hardware products
- Description of the problem
- Exact wording of any error messages
- Hardware and software configuration information

Using other services

You might travel with your computer or relocate it to a country or region where the machine type for your desktop or notebook computer is sold. In such a situation, your computer might be eligible for International

Warranty Service, which automatically entitles you to obtain warranty service throughout the warranty period. Service will be performed by service providers authorized to perform warranty service.

Service methods and procedures vary by country, and some services might not be available in all countries. International Warranty Service is delivered through the method of service (such as depot, carry-in, or on-site service) that is provided in the servicing country. Service centers in certain countries might not be able to service all models of a particular machine type. In some countries, fees and restrictions might apply at the time of service.

To determine whether your computer is eligible for International Warranty Service and to view a list of the countries or regions where service is available, go to https://support.lenovo.com.

For technical assistance with the installation of or questions related to Service Packs for your preinstalled Microsoft Windows product, go to https://support.microsoft.com. You also can contact the Lenovo Customer Support Center for help. Some fees might apply.

Purchasing additional services

During and after the warranty period, you can purchase additional services. Examples of these additional services include:

- Support for hardware, operating systems, and programs
- Network setup and configuration services
- Upgraded or extended hardware repair services
- Custom installation services

Service availability and service name might vary by country or region. For more information about these services, go to the Lenovo Web site at:
https://www.lenovo.com

Appendix A. System memory speed

The Intel Core™ microprocessor families compatible with this ThinkStation computer feature an integrated memory controller. The memory controller provides the microprocessor with direct access to the system memory. Therefore, the system memory speed will be determined by the memory module type, frequency, size (capacity), the number of memory modules installed, and the microprocessor model.

Notes:

- The actual system memory speed of the memory modules varies depending on the microprocessor model. For example, your computer comes with 2666 MT/s memory modules, but the microprocessor only supports up to 2400 MT/s memory modules. Then the system memory speed will be no faster than 2400 MT/s.
- The microprocessor models supported in your computer might vary. For a list of supported microprocessor models, contact the Lenovo Customer Support Center.

Refer to the following information about the system memory speed:

- **Memory module types**: SODIMM
- **Memory module operating voltage**: 1.2 V
- **Memory module frequency**:
  - 2400 MT/s
  - 2666 MT/s
- **Microprocessor models**:
  - Intel Xeon i3-8100T, i3-8300T
  - Intel Xeon i5-8400T, i5-8500T, i5-8600T
  - Intel Xeon i7–8700T

© Copyright Lenovo 2018, 2019

Appendix B. Supplemental information about the Ubuntu operating system

In limited countries or regions, Lenovo offers customers an option to order computers with the preinstalled Ubuntu® operating system.

If the Ubuntu operating system is available on your computer, read the following information before you use the computer. Ignore any information related to Windows-based programs, utilities, and Lenovo preinstalled applications in this documentation.

Accessing the Lenovo Limited Warranty

This product is covered by the terms of the Lenovo Limited Warranty (LLW), version L505-0010-02 08/2011. You can view the LLW in a number of languages from the following Web site. Read the Lenovo Limited Warranty at:
https://www.lenovo.com/warranty/llw_02

The LLW also is preinstalled on the computer. To access the LLW, go to the following directory:

```
/usr/share/doc/lenovo-doc
```

If you cannot view the LLW either from the Web site or from your computer, contact your local Lenovo office or reseller to obtain a printed version of the LLW.

Accessing the Ubuntu help system

The Ubuntu help system provides information about how to use the Ubuntu operating system. To access the help system from the Unity, move your pointer to the Launch bar, and then click the **Help** icon. If you cannot find the **Help** icon from the Launch bar, click the **Search** icon, and type Help to search it.

To learn more about the Ubuntu operating system, go to:
https://www.ubuntu.com

Getting support information

If you need help, service, technical assistance, or more information about the Ubuntu operating system or other applications, contact the provider of the Ubuntu operating system or the provider of the application. If you need the service and support for hardware components shipped with your computer, contact Lenovo. For more information about how to contact Lenovo, refer to the *User Guide* and *Safety and Warranty Guide*.

To access the latest *User Guide*, *Setup Guide*, and *Safety and Warranty Guide*, go to:
https://support.lenovo.com

© Copyright Lenovo 2018, 2019

Appendix C. Regulatory information

The latest compliance information is available at:
https://www.lenovo.com/compliance

Export classification notice

This product is subject to the United States Export Administration Regulations (EAR) and has an Export Classification Control Number (ECCN) of 5A992.c. It can be re-exported except to any of the embargoed countries in the EAR E1 country list.

Electronic emissions notices

Federal Communications Commission Declaration of Conformity

The following information refers to ThinkStation P330 Tiny, machine types: 30CE, 30CF, 30CG, 30D5, 30D6, and 30D7.

This equipment has been tested and found to comply with the limits for a Class B digital device, pursuant to Part 15 of the FCC Rules. These limits are designed to provide reasonable protection against harmful interference in a residential installation. This equipment generates, uses, and can radiate radio frequency energy and, if not installed and used in accordance with the instructions, may cause harmful interference to radio communications. However, there is no guarantee that interference will not occur in a particular installation. If this equipment does cause harmful interference to radio or television reception, which can be determined by turning the equipment off and on, the user is encouraged to try to correct the interference by one or more of the following measures:

- Reorient or relocate the receiving antenna.
- Increase the separation between the equipment and receiver.
- Connect the equipment into an outlet on a circuit different from that to which the receiver is connected.
- Consult an authorized dealer or service representative for help.

Lenovo is not responsible for any radio or television interference caused by using other than recommended cables and connectors or by unauthorized changes or modifications to this equipment. Unauthorized changes or modifications could void the user's authority to operate the equipment.

This device complies with Part 15 of the FCC Rules. Operation is subject to the following two conditions: (1) this device may not cause harmful interference, and (2) this device must accept any interference received, including interference that may cause undesired operation.

Responsible Party:
Lenovo (United States) Incorporated
7001 Development Drive
Morrisville, NC 27560
Email: FCC@lenovo.com

Industry Canada Class B emission compliance statement

CAN ICES-3(B)/NMB-3(B)

© Copyright Lenovo 2018, 2019

European Union conformity

EU contact: Lenovo, Einsteinova 21, 851 01 Bratislava, Slovakia

CE

EMC Directive Statement: This product is in conformity with the protection requirements of EU Council EMC Directive 2014/30/EU on the approximation of the laws of the Member States relating to electromagnetic compatibility.

This product has been tested and found to comply with the limits for Class B equipment according to European Standards harmonized in the Directives in compliance. The Class B requirements for equipment are intended to offer adequate protection to broadcast services within residential environments.

Radio Equipment Directive Statement: This product is in conformity with all the requirements and essential norms that apply to EU Council Radio Equipment Directive 2014/53/EU on the approximation of the laws of the Member States relating to radio equipment. The full text of the system EU declaration of conformity and the EU wireless module declarations are available at following Internet addresses: https://www.lenovo.com/eu-doc-workstations

Lenovo cannot accept responsibility for any failure to satisfy the protection requirements resulting from a non-recommended modification of the product, including the installation of option cards from other manufacturers.

German Class B compliance statement

Deutschsprachiger EU Hinweis:

Hinweis für Geräte der Klasse B EU-Richtlinie zur Elektromagnetischen Verträglichkeit

Dieses Produkt entspricht den Schutzanforderungen der EU-Richtlinie 2014/30/EU zur Angleichung der Rechtsvorschriften über die elektromagnetische Verträglichkeit in den EU-Mitgliedsstaaten und hält die Grenzwerte der Klasse B der Norm gemäß Richtlinie.

Um dieses sicherzustellen, sind die Geräte wie in den Handbüchern beschrieben zu installieren und zu betreiben. Des Weiteren dürfen auch nur von der Lenovo empfohlene Kabel angeschlossen werden. Lenovo übernimmt keine Verantwortung für die Einhaltung der Schutzanforderungen, wenn das Produkt ohne Zustimmung der Lenovo verändert bzw. wenn Erweiterungskomponenten von Fremdherstellern ohne Empfehlung der Lenovo gesteckt/eingebaut werden.

Deutschland:

Einhaltung des Gesetzes über die elektromagnetische Verträglichkeit von Betriebsmitteln

Dieses Produkt entspricht dem „Gesetz über die elektromagnetische Verträglichkeit von Betriebsmitteln“ EMVG (früher „Gesetz über die elektromagnetische Verträglichkeit von Geräten“). Dies ist die Umsetzung der EMV EU-Richtlinie 2014/30/EU in der Bundesrepublik Deutschland.

Zulassungsbescheinigung laut dem Deutschen Gesetz über die elektromagnetische Verträglichkeit von Betriebsmitteln, EMVG vom 20. Juli 2007 (früher Gesetz über die elektromagnetische Verträglichkeit von Geräten), bzw. der EMV EU Richtlinie 2014/30/EU, für Geräte der Klasse B.

Dieses Gerät ist berechtigt, in Übereinstimmung mit dem Deutschen EMVG das EG-Konformitätszeichen - CE - zu führen. Verantwortlich für die Konformitätserklärung nach Paragraf 5 des EMVG ist die Lenovo (Deutschland) GmbH, Meitnerstr. 9, D-70563 Stuttgart.

Informationen in Hinsicht EMVG Paragraf 4 Abs. (1) 4:

Das Gerät erfüllt die Schutzanforderungen nach EN 55024 und EN 55032 Klasse B.

Korean wireless-radio compliance information

무선설비 전파 혼신 (사용주파수 **2400**～**2483.5**, **5725**～**5825** 무선제품해당)
해당 무선설비가 전파혼신 가능성이 있으므로 인명안전과 관련된 서비스는 할 수 없음

Japan VCCI Class B compliance statement

この装置は、クラスB情報技術装置です。この装置は家庭環境で使用する事を目的としていますが、この装置がラジオやテレビジョン受信機に近接して使用されると、受信障害を引き起こすことがあります。取扱書に従って正しい取り扱いをして下さい。

VCCI-B

Japan compliance statement for products which connect to the power mains with rated current less than or equal to 20 A per phase

日本の定格電流が 20A/相 以下の機器に対する高調波電流規制
高調波電流規格 JIS C 61000-3-2 適合品

Japan notice for ac power cord

The ac power cord shipped with your product can be used only for this specific product. Do not use the ac power cord for other devices.

本製品およびオプションに電源コード・セットが付属する場合は、
それぞれ専用のものになっていますので他の電気機器には使用し
ないでください。

Lenovo product service information for Taiwan

委製商/進口商名稱: 荷蘭商聯想股份有限公司台灣分公司
進口商地址:台北市中山區北安路780號7樓
進口商電話: 0800-000-702 (代表號)

Keyboard and mouse compliance statement for Taiwan

本產品隨貨附已取得經濟部標準檢驗局認可之PS/2或USB的鍵盤與滑鼠一組

Eurasian compliance mark

EAC

Brazil audio notice

Ouvir sons com mais de 85 decibéis por longos períodos pode provocar danos ao sistema auditivo.

Mexico wireless-radio compliance information

Advertencia: En Mexico la operación de este equipo estásujeta a las siguientes dos condiciones: (1) es posible que este equipo o dispositivo no cause interferencia perjudicial y (2) este equipo o dispositivo debe aceptar cualquier interferencia, incluyendo la que pueda causar su operación no deseada.

Additional regulatory information

For additional regulatory information, refer to the *Regulatory Notice* shipped with your computer. Depending on the configuration of your computer and the country or region where the computer was purchased, you might have received additional printed regulatory notices. All regulatory notices are available on the Lenovo Support Web site in electronic format. To access electronic copies of the documentation, go to https://support.lenovo.com.

Appendix D. WEEE and recycling information of countries and regions

Lenovo encourages owners of information technology (IT) equipment to responsibly recycle their equipment when it is no longer needed. Lenovo offers various programs and services to assist equipment owners in recycling their IT products. The latest environmental information is available at:
https://www.lenovo.com/ecodeclaration

Important WEEE information

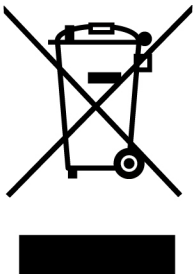

The WEEE marking on Lenovo products applies to countries with WEEE and e-waste regulations (for example, the European WEEE Directive, India E-Waste Management Rules). Appliances are labeled in accordance with local regulations concerning waste electrical and electronic equipment (WEEE). These regulations determine the framework for the return and recycling of used appliances as applicable within each geography. This label is applied to various products to indicate that the product is not to be thrown away, but rather put in the established collection systems for reclaiming these end of life products.

Users of electrical and electronic equipment (EEE) with the WEEE marking must not dispose of end of life EEE as unsorted municipal waste, but use the collection framework available to them for the return, recycle, and recovery of WEEE and to minimize any potential effects of EEE on the environment and human health due to the presence of hazardous substances. Lenovo electrical and electronic equipment (EEE) may contain parts and components, which at end-of-life might qualify as hazardous waste.

EEE and waste electrical and electronic equipment (WEEE) can be delivered free of charge to the place of sale or any distributor that sells electrical and electronic equipment of the same nature and function as the used EEE or WEEE.

For additional WEEE information, go to:
https://www.lenovo.com/recycling

WEEE information for Hungary

Lenovo, as a producer, bears the cost incurred in connection with the fulfillment of Lenovo's obligations under Hungary Law No. 197/2014 (VIII.1.) subsections (1)-(5) of section 12.

Recycling information for Japan

Collecting and recycling a disused Lenovo computer or monitor

If you are a company employee and need to dispose of a Lenovo computer or monitor that is the property of the company, you must do so in accordance with the Law for Promotion of Effective Utilization of Resources. Computers and monitors are categorized as industrial waste and should be properly disposed of by an

© Copyright Lenovo 2018, 2019

industrial waste disposal contractor certified by a local government. In accordance with the Law for Promotion of Effective Utilization of Resources, Lenovo Japan provides, through its PC Collecting and Recycling Services, for the collecting, reuse, and recycling of disused computers and monitors. For details, visit the Lenovo Web site at https://www.lenovo.com/recycling/japan. Pursuant to the Law for Promotion of Effective Utilization of Resources, the collecting and recycling of home-used computers and monitors by the manufacturer was begun on October 1, 2003. This service is provided free of charge for home-used computers sold after October 1, 2003. For details, visit the Lenovo Web site at https://www.lenovo.com/recycling/japan.

Disposing of Lenovo computer components

Some Lenovo computer products sold in Japan may have components that contain heavy metals or other environmental sensitive substances. To properly dispose of disused components, such as a printed circuit board or drive, use the methods described above for collecting and recycling a disused computer or monitor.

Disposing of disused lithium batteries from Lenovo computers

A button-shaped lithium battery is installed inside your Lenovo computer to provide power to the computer clock while the computer is off or disconnected from the main power source. If you need to replace it with a new one, contact your place of purchase or contact Lenovo for service. If you need to dispose of a disused lithium battery, insulate it with vinyl tape, contact your place of purchase or an industrial-waste-disposal operator, and follow their instructions. Disposal of a lithium battery must comply with local ordinances and regulations.

Recycling information for Brazil

Declarações de Reciclagem no Brasil

Descarte de um Produto Lenovo Fora de Uso

Equipamentos elétricos e eletrônicos não devem ser descartados em lixo comum, mas enviados à pontos de coleta, autorizados pelo fabricante do produto para que sejam encaminhados e processados por empresas especializadas no manuseio de resíduos industriais, devidamente certificadas pelos orgãos ambientais, de acordo com a legislação local.

A Lenovo possui um canal específico para auxiliá-lo no descarte desses produtos. Caso você possua um produto Lenovo em situação de descarte, ligue para o nosso SAC ou encaminhe um e-mail para: reciclar@lenovo.com, informando o modelo, número de série e cidade, a fim de enviarmos as instruções para o correto descarte do seu produto Lenovo.

Battery recycling information for Taiwan



Battery recycling information for the European Union

EU

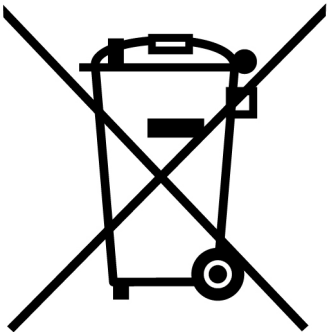

Notice: This mark applies only to countries within the European Union (EU).

Batteries or packaging for batteries are labeled in accordance with European Directive 2006/66/EC concerning batteries and accumulators and waste batteries and accumulators. The Directive determines the framework for the return and recycling of used batteries and accumulators as applicable throughout the European Union. This label is applied to various batteries to indicate that the battery is not to be thrown away, but rather reclaimed upon end of life per this Directive.

In accordance with the European Directive 2006/66/EC, batteries and accumulators are labeled to indicate that they are to be collected separately and recycled at end of life. The label on the battery may also include a chemical symbol for the metal concerned in the battery (Pb for lead, Hg for mercury, and Cd for cadmium). Users of batteries and accumulators must not dispose of batteries and accumulators as unsorted municipal waste, but use the collection framework available to customers for the return, recycling, and treatment of batteries and accumulators. Customer participation is important to minimize any potential effects of batteries and accumulators on the environment and human health due to the potential presence of hazardous substances.

Before placing electrical and electronic equipment (EEE) in the waste collection stream or in waste collection facilities, the end user of equipment containing batteries and/or accumulators must remove those batteries and accumulators for separate collection.

Disposing of lithium batteries and battery packs from Lenovo products

A coin-cell type lithium battery might be installed inside your Lenovo product. You can find details about the battery in the product documentation. If the battery needs to be replaced, contact your place of purchase or contact Lenovo for service. If you need to dispose of a lithium battery, insulate it with vinyl tape, contact your place of purchase or a waste-disposal operator, and follow their instructions.

Disposing of battery packs from Lenovo products

Your Lenovo device might contain a lithium-ion battery pack or a nickel metal hydride battery pack. You can find details on the battery pack in the product documentation. If you need to dispose of a battery pack, insulate it with vinyl tape, contact Lenovo sales, service, or your place of purchase, or a waste-disposal operator, and follow their instructions. You also can refer to the instructions provided in the user guide for your product.

For proper collection and treatment, go to:
https://www.lenovo.com/environment

Appendix E. Restriction of Hazardous Substances (RoHS) Directive of countries and regions

The latest environmental information is available at:
https://www.lenovo.com/ecodeclaration

European Union RoHS

This Lenovo product, with included parts (cables, cords, and so on) meets the requirements of Directive 2011/65/EU on the restriction of the use of certain hazardous substances in electrical and electronic equipment (“RoHS recast” or “RoHS 2”).

For more information about Lenovo worldwide compliance on RoHS, go to:
https://www.lenovo.com/rohs-communication

China RoHS

产品中有害物质的名称及含量

部件名称	有害物质					
	铅(Pb)	汞(Hg)	镉(Cd)	六价铬 (Cr(VI))	多溴连苯 (PBB)	多溴二苯醚 (PBDE)
印刷电路板组件*	X	O	O	O	O	O
硬盘	X	O	O	O	O	O
光驱	X	O	O	O	O	O
内存	X	O	O	O	O	O
电脑I/O 附件	X	O	O	O	O	O
电源	X	O	O	O	O	O
键盘	X	O	O	O	O	O
鼠标	X	O	O	O	O	O
机箱/ 附件	X	O	O	O	O	O
电池	X	O	O	O	O	O

本表格依据 SJ/T 11364 的规定编制。
O：表示该有害物质在该部件所有均质材料中的含量均在 GB/T 26572 规定的限量要求以下。
X：表示该有害物质至少在该部件的某一均质材料中的含量超出 GB/T 26572 规定的限量要求。
注：表中标记“X”的部件，皆因全球技术发展水平限制而无法实现有害物质的替代。
印刷电路板组件*：包括印刷电路板及其零部件、电容和连接器
根据型号的不同，可能不会含有以上的所有部件，请以实际购买机型为准



在中华人民共和国境内销售的电子信息产品必须标识此标志，标志内的数字代表在正常使用状态下的产品的环保使用期限

Turkish RoHS

The Lenovo product meets the requirements of the Republic of Turkey Directive on the Restriction of the Use of Certain Hazardous Substances in Waste Electrical and Electronic Equipment (WEEE).

© Copyright Lenovo 2018, 2019

Türkiye AEEE Yönetmeliğine Uygunluk Beyanı

Bu Lenovo ürünü, T.C. Çevre ve Orman Bakanlığı'nın “Atık Elektrik ve Elektronik Eşyalarda Bazı Zararlı Maddelerin Kullanımının Sınırlandırılmasına Dair Yönetmelik (AEEE)” direktiflerine uygundur.

AEEE Yönetmeliğine Uygundur.

Ukraine RoHS

Цим підтверджуємо, що продукція Леново відповідає вимогам нормативних актів України, які обмежують вміст небезпечних речовин

India RoHS

RoHS compliant as per E-Waste (Management) Rules.

Taiwan RoHS

單元	限用物質及其化學符號					
	鉛 (Pb)	汞 (Hg)	鎘 (Cd)	六價鉻 (Cr^{+6})	多溴聯苯 (PBB)	多溴二苯醚 (PBDE)
印刷電路板組件	−	○	○	○	○	○
硬碟	−	○	○	○	○	○
光碟機	−	○	○	○	○	○
記憶體	−	○	○	○	○	○
電腦I/O配件	−	○	○	○	○	○
電源供應器	−	○	○	○	○	○
鍵盤	−	○	○	○	○	○
滑鼠	−	○	○	○	○	○
機殼/配件	−	○	○	○	○	○

備考1. 〝超出0.1 wt %〞及〝超出0.01 wt %〞係指限用物質之百分比含量超出百分比含量基準值。
備考2. 〝○〞係指該項限用物質之百分比含量未超出百分比含量基準值。
備考3. 〝−〞係指該項限用物質為排除項目。

Appendix F. ENERGY STAR model information

ENERGY STAR® is a joint program of the U.S. Environmental Protection Agency and the U.S. Department of Energy aimed at saving money and protecting the environment through energy efficient products and practices.

Lenovo is proud to offer our customers products with an ENERGY STAR compliant designation. Some models of the following machine types have been designed and tested to conform to the ENERGY STAR program requirement for computers at the time of manufacture: 30CE, 30CF, 30CG, 30D5, 30D6, and 30D7. For more information about ENERGY STAR ratings for Lenovo computers, go to:
https://www.lenovo.com

By using ENERGY STAR compliant products and taking advantage of the power-management features of your computer, you reduce the consumption of electricity. Reduced electrical consumption contributes to potential financial savings, a cleaner environment, and the reduction of greenhouse gas emissions.

For more information about ENERGY STAR, go to:
https://www.energystar.gov/

Lenovo encourages you to make efficient use of energy an integral part of your day-to-day operations. To help in this endeavor, set the following power-management features to take effect when your computer has been inactive for a specified duration:

Table 2. ENERGY STAR power-management features

Windows 10 operating system
Power plan: Default • Turn off the display: After 10 minutes • Put the computer to sleep: After 25 minutes • Advanced power settings: – Turn off hard disk drives: After 20 minutes – Hibernate: Never

To awaken your computer from a Sleep mode, press any key on your keyboard.

To change power settings, do the following:

1. Click the Start button to open the Start menu.
2. Click **Windows System → Control Panel**.
3. View Control Panel by Large icons or Small icons, and then click **Power Options**.
4. Follow the instructions on the screen.

© Copyright Lenovo 2018, 2019

Appendix G. Notices

Lenovo may not offer the products, services, or features discussed in this document in all countries. Consult your local Lenovo representative for information on the products and services currently available in your area. Any reference to a Lenovo product, program, or service is not intended to state or imply that only that Lenovo product, program, or service may be used. Any functionally equivalent product, program, or service that does not infringe any Lenovo intellectual property right may be used instead. However, it is the user's responsibility to evaluate and verify the operation of any other product, program, or service.

Lenovo may have patents or pending patent applications covering subject matter described in this document. The furnishing of this document does not give you any license to these patents. You can send license inquiries, in writing, to:

Lenovo (United States), Inc.
1009 Think Place - Building One
Morrisville, NC 27560
U.S.A.
Attention: Lenovo Director of Licensing

LENOVO PROVIDES THIS PUBLICATION "AS IS" WITHOUT WARRANTY OF ANY KIND, EITHER EXPRESS OR IMPLIED, INCLUDING, BUT NOT LIMITED TO, THE IMPLIED WARRANTIES OF NON-INFRINGEMENT, MERCHANTABILITY OR FITNESS FOR A PARTICULAR PURPOSE. Some jurisdictions do not allow disclaimer of express or implied warranties in certain transactions, therefore, this statement may not apply to you.

This information could include technical inaccuracies or typographical errors. Changes are periodically made to the information herein; these changes will be incorporated in new editions of the publication. Lenovo may make improvements and/or changes in the products and/or the programs described in this publication at any time without notice.

The products described in this document are not intended for use in implantation or other life support applications where malfunction may result in injury or death to persons. The information contained in this document does not affect or change Lenovo product specifications or warranties. Nothing in this document shall operate as an express or implied license or indemnity under the intellectual property rights of Lenovo or third parties. All information contained in this document was obtained in specific environments and is presented as an illustration. The result obtained in other operating environments may vary.

Lenovo may use or distribute any of the information you supply in any way it believes appropriate without incurring any obligation to you.

Any references in this publication to non-Lenovo Web sites are provided for convenience only and do not in any manner serve as an endorsement of those Web sites. The materials at those Web sites are not part of the materials for this Lenovo product, and use of those Web sites is at your own risk.

Any performance data contained herein was determined in a controlled environment. Therefore, the result obtained in other operating environments may vary significantly. Some measurements may have been made on development-level systems and there is no guarantee that these measurements will be the same on generally available systems. Furthermore, some measurements may have been estimated through extrapolation. Actual results may vary. Users of this document should verify the applicable data for their specific environment.

© Copyright Lenovo 2018, 2019

Appendix H. Trademarks

LENOVO, the LENOVO logo, the THINKSTATION logo, and THINKSTATION are trademarks of Lenovo. Microsoft, Windows, and Windows Media are trademarks of the Microsoft group of companies. Intel and Xeon are trademarks of Intel Corporation in the U.S. and/or other countries. DisplayPort and Mini DisplayPort are trademarks of the Video Electronics Standards Association. Ubuntu is a registered trademark of Canonical Ltd. All other trademarks are the property of their respective owners. © 2019 Lenovo.

© Copyright Lenovo 2018, 2019