STATUS:
PJO 08/06/2019 - RELEASED ON ECO: 500019428

TECH-001011

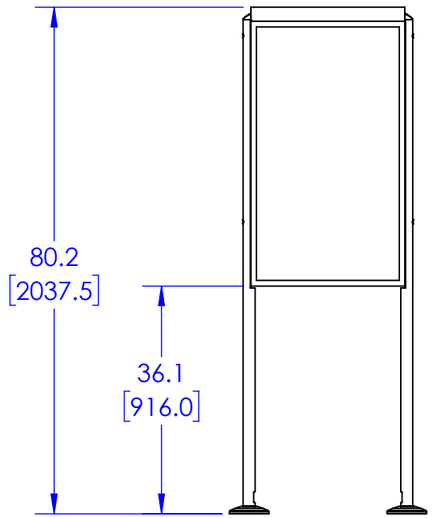

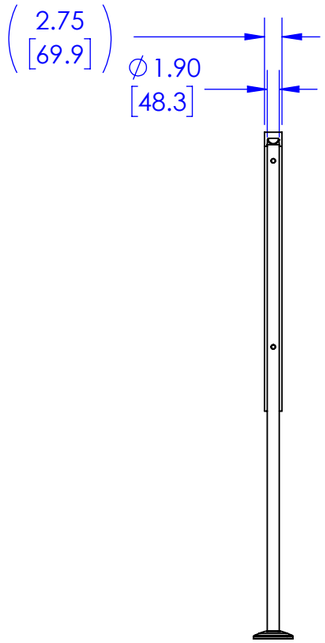

46" SAMSUNG OMN
DISPLAY SHOWN
NOT INCLUDED

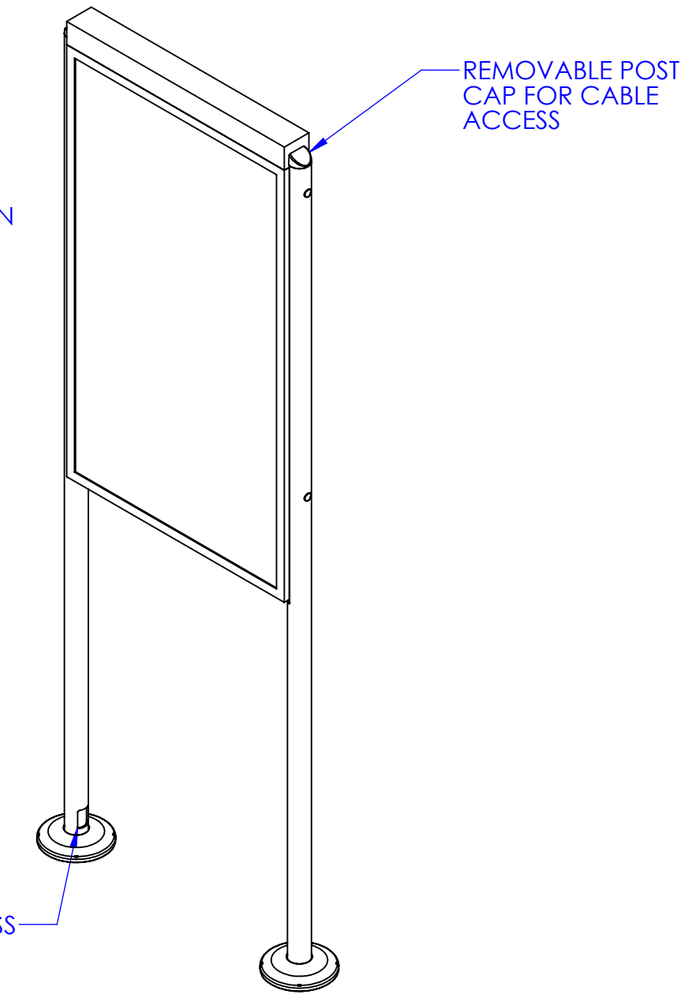

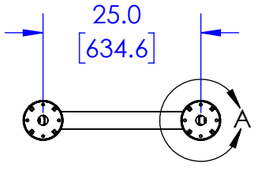

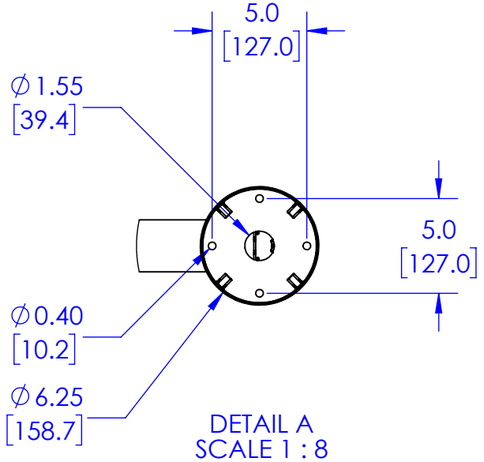

DETAIL A
SCALE 1 : 8

THE INFORMATION AND DESIGNS CONTAINED IN THIS DRAWING ARE CONFIDENTIAL AND THE PROPRIETARY PROPERTY OF MILESTONE AV TECHNOLOGIES NEITHER THIS DESIGN NOR ANY INFORMATION CONTAINED IN THIS DRAWING MAY BE REPRODUCED OR DISCLOSED TO OTHERS WITHOUT THE EXPRESS WRITTEN CONSENT OF MILESTONE AV TECHNOLOGIES.

CAD GENERATED DRAWING, DO NOT MANUALLY UPDATE.		
DRAWN BY	PJO	8/6/2019
ENG APPROVAL		
MFG APPROVAL		
QA APPROVAL		

CHIEF
6436 CITY WEST PKWY
EDEN PRAIRIE MN, 55344
PHONE: 866-977-3901
FAX: 877-894-6918

DESCRIPTION: CUSTOMER PRINT FOR OMNDBF46

MODEL NO.: OMNDBF46

SHEET 1 OF 1 | SCALE 1:24 | SIZE B | DWG. NO. TECH-001011 | REV. 00