SMART OPC PC modules **PCM8 series**

PCM8-i5
PCM8-i7 vPro™



OVERVIEW

SMART Open Pluggable Specification (OPS) PC modules provide a hassle-free Windows® 10 Pro solution based on the latest eighth generation Intel® Core™ processors, and are designed specifically to work with SMART Board® interactive displays. Available in two standard configurations, all OPS PC modules in the PCM8 series are WHQL (Windows Hardware Quality Labs) certified and fully licensed with Windows 10 Pro out of the box. Install the OPS PC module in a SMART Board interactive display's OPS slot to provide a complete 4K UHD Windows 10 solution at your fingertips, without the need for an external device or additional cables.

Install familiar Windows software applications such as SMART Notebook® collaborative learning software, SMART TeamWorks™ visual collaboration software, and SMART Meeting Pro® software, and access the internet directly through your existing interactive display's network connection. Upgrades and service for the OPS PC module can be easily performed without removing the interactive display from its mounting.

SPECIFICATIONS

Processor (Kaby Lake R)	PCM8-i5: Intel Core i5 8250U PCM8-i7 vPro: Intel Core i7 8650U vPro
Memory	8 GB DDR4
Storage	128 GB M.2 SSD
Graphics	Intel HD Graphics 620
4K UHD video	Yes, Full 4K UHD, 60 Hz
Operating system	Windows 10 Pro full license
LAN	PCM8-i5: Gigabit Ethernet RTL8111 PCM8-i7 vPro: Gigabit Ethernet Intel I219
Wireless	PCM8-i5: Intel AC3165 (2.4 GHz / 5 GHz / BT) PCM8-i7 vPro: Intel AC8265 vPro (2.4 GHz / 5 GHz / BT) Wi-Fi 802.11A/B/G/N/AC Bluetooth® 4.2
Other features	Antennae (×2) Power and recovery buttons Power and hard drive status lights Kensington® Security Slot Internal 2.5" drive bay to allow for additional storage

smarttech.com
smarttech.com/contact

© 2021 SMART Technologies ULC. All rights reserved. SMART Board, SMART Notebook, SMART TeamWorks, SMART Meeting Pro, smarttech, the SMART logo and all SMART taglines are trademarks or registered trademarks of SMART Technologies ULC in the U.S. and/or other countries. Windows is either a registered trademark or trademark of Microsoft Corporation in the United States and/or other countries. Intel, Core, and vPro are trademarks of Intel Corporation in the U.S. and/or other countries. The Bluetooth word mark is owned by the Bluetooth SIG, Inc. and any use of such marks by SMART Technologies ULC is under license. The Adopted Trademarks HDMI, HDMI High-Definition Multimedia Interface, and the HDMI Logo are trademarks or registered trademarks of HDMI Licensing Administrator, Inc. in the United States and other countries. All other third-party product and company names may be trademarks of their respective owners. This product and/or use thereof is covered by one or more of the following U.S. patents: www.smarttech.com/patents. Contents are subject to change without notice. March 3, 2021.

SMART DISPLAYS AND SOFTWARE[1]

Supported SMART Board interactive display series	GX MX100 MX (V2) and MX (V2) Pro 6000S and 6000S Pro 7000-V2 and 7000-V2 Pro 7000R and 7000R Pro
Installation in displays	Installs in OPS slots of supported SMART Board interactive displays
Available SMART software	SMART Notebook SMART TeamWorks SMART Meeting Pro SMART Remote Management

STORAGE AND OPERATING REQUIREMENTS

Power requirements	12V to 19V DC
Operating temperature	32–104°F (0–40°C)
Storage temperature	-4–140°F (-20–60°C)
Humidity	10–90% relative humidity, non-condensing

POWER CONSUMPTION

Standby	<0.5 W
Maximum	35 W

CERTIFICATION AND COMPLIANCE[2]

US / Canada	UL Recognized, FCC, ISED, CONEG Packaging, California Prop 65
EU / EEA / EFTA / UK	CE Mark, REACH, RoHS, Battery, Packaging, POP
Australia / New Zealand	RCM Mark
Performance / interoperability certifications	WHQL

PURCHASING INFORMATION

Order number: UGK-PCM8-i5	OPS PC module with Windows 10 Pro, i5 processor
Order number: UGK-PCM8-i7v	OPS PC module with Windows 10 Pro, i7 vPro processor

WARRANTY

Included warranty	Three-year limited equipment warranty
EWY1-PCM8-i5	One-year warranty extension for PCM8 series OPS PC module, i5 processor
EWY2-PCM8-i5	Two-year warranty extension for PCM8 series OPS PC module, i5 processor
EWY1-PCM8-i7v	One-year warranty extension for PCM8 series OPS PC module, i7 vPro processor
EWY2-PCM8-i7v	Two-year warranty extension for PCM8 series OPS PC module, i7 vPro processor

INPUTS AND OUTPUTS

		Qty
1.	USB Type-C	1
2.	USB 2.0 Type-A	2
3.	USB 3.0 Type-A	2
4.	RJ45 (including indicator lights)	1
5.	HDMI® 1.4 out	1
6.	Stereo 3.5 mm out	1
7.	Stereo 3.5 mm in	1

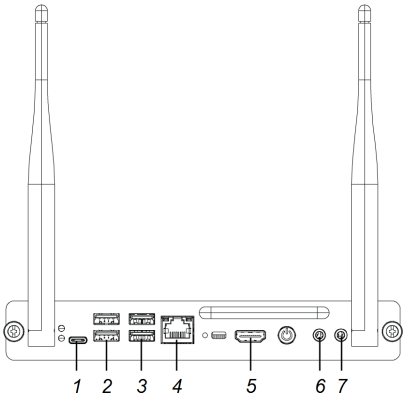

NOTE

Charge a maximum of two devices at a time using USB receptacles. The USB Type-C connector provides up to 1.5 A for charging.

[1]Sold separately

[2]Product availability may vary by region.
This product has received additional certifications not listed here.

DIMENSIONS AND WEIGHTS

NOTE

All dimensions and weights ±10%.

Dimensions

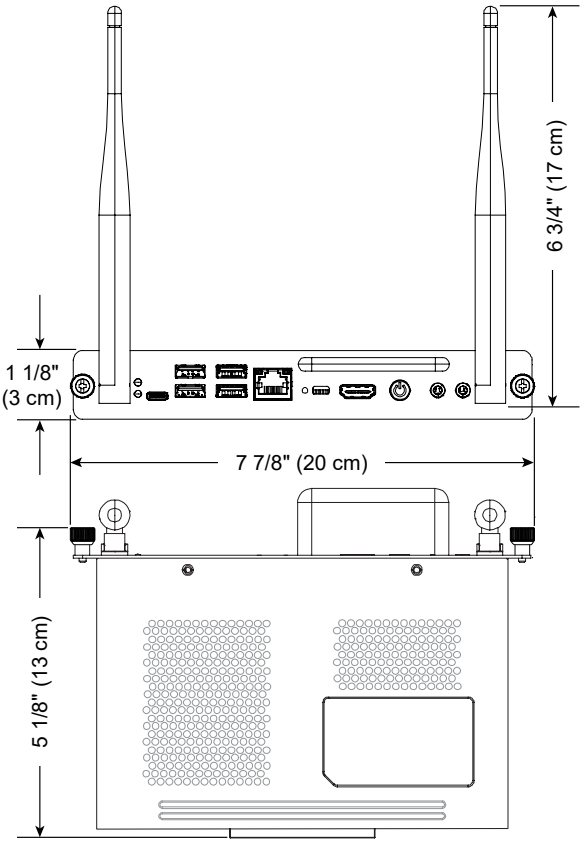

Weight

2 lb. (910 g)

Shipping dimensions

10 5/8" × 8 5/8" × 2 3/4" (27 cm × 22 cm × 7 cm)