ARG 9021 A+

12NC: 859991571300

GTIN (EAN) code: 8003437237980

SENSING THE DIFFERENCE



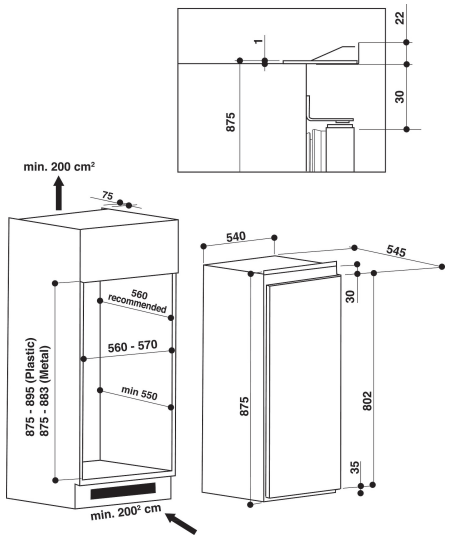

Whirlpool integrated fridge - ARG 9021 A+

This Whirlpool integrated Fridge features: dedicated bottle balcony.

115 - 185 l capacity
All the space you need. This Whirlpool Refrigerator is designed to provide all the space you need to comfortably store your food and drinks.

Energy class A+
Greater energy efficiency. With its A+ energy rating, this Whirlpool appliance will allow you to enjoy both ideal performance and excellent energy consumption.

Reversible Door
For your convenience. This Whirlpool Refrigerator features a reversible door, that can be opened from left or right, for your convenience.

Bottle balcony
Safe storage. This Whirlpool Refrigerator provides perfect storage for your bottles, with its dedicated bottle balcony.

Glass shelves
A passion for beauty in every detail. This Whirlpool Refrigerator includes toughened glass shelves with lipped edges that prevent spills, designed to combine beauty and functionality, and providing you the most fulfilling user experience imaginable.

- Energy class: A+
- Total net capacity: 131 l
- Product dimensions (HxWxD): 875x540x545 mm
- Reversible door
- Noise level: 39 dB(A)
- Temperature adjustable
- Cooling System for Fridge Compartment: Static
- 3 adjustable balconies
- Incandescent bulb lighting
- 1 drawer
- 4 shelves in fridge compartment
- Mechanical controls
- Annual energy consumption 118 kWh/annum
- Slided mounted cover door installation system
- Total gross capacity: 132 l
- Niche dimensions (HxWxD): 875 x 560 x 550 mm
- Right reversible door

ARG 9021 A+

12NC: 859991571300

GTIN (EAN) code: 8003437237980

Whirlpool
SENSING THE DIFFERENCE

MAIN FEATURES

Product group	Refrigerator
Commercial code	ARG 9021 A+
GTIN (EAN) code	8003437237980
Construction type	Built-in
Installation type	Built-in
Type of control	Mechanical
Type of control settings	Mechanic
Main colour of product	N/A
Electrical connection rating (W)	46
Current (A)	16
Voltage (V)	220-240
Frequency (Hz)	50
Length of Electrical Supply Cord (cm)	200
Plug type	Schuko
Total unit net capacity (l)	131
Star Rating	N/A
Number of independent cooling systems	1
Height of the product	875
Width of the product	540
Depth of the product	545
Depth with open door 90 degree (mm)	-
Maximum adjustability feet	0
Net weight (kg)	30
Door hinge	Right reversible

TECHNICAL FEATURES

Temperature adjustable	Yes
Warning signal / Malfunction	No signal
Defrost process fridge section	N/A
Fast cooling possibility	No
Interior ventilator fridge section	No
Shelves for Bottles	No
Lockable door	-
Number of shelves in fridge compartment	4
Number of Adjustable Shelves in fridge compartment	3
Material of the shelves	Glass
Thermometer fridge section	Analog

PERFORMANCES

Energy efficiency class - NEW (2010/30/EU)	A+
Energy consumption annual (kWh/annum) - NEW (2010/30/EU)	118
Refrigerator Net capacity (l) - NEW (2010/30/EU)	131
Freezer Net capacity (l) - NEW (2010/30/EU)	0
Freezing capacity (kg/24h) - NEW (2010/30/EU)	0
Temperature rise time (h)	0
Climate class	N
Noise level (dB(A) re 1 pW)	39
Frost free system	No
Maximum ambient temperature	32
Minimum ambient temperature	16

