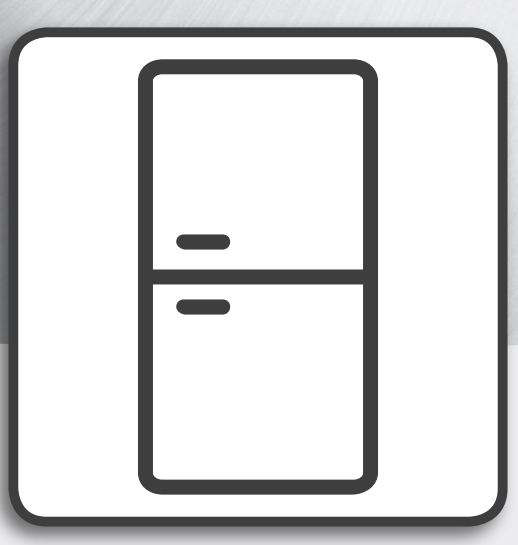

Health & Safety and **Installation** guide

EN *ENGLISH*

Health and Safety guide ***3***
Installation guide ***6***

SAFETY INSTRUCTIONS

IMPORTANT TO BE READ AND OBSERVED

Before using the appliance read these safety instructions.
Keep them for future reference.
These instructions and the appliance itself provide important safety warnings, to be observed at all times.
The manufacturer declines any liability for failure to observe these safety instructions, for inapropriate use of the appliance or incorrect setting of controls.

SAFETY WARNINGS

Very young (0-3 years) and young children (3-8 years) shall be kept away from the appliance unless continuously supervised.
Children from 8 years old and above and persons with reduced physical, sensory or mental capabilities or lack of experience and knowledge can use this appliance only if they are supervised or have been given instructions on safe use and understand the hazards involved. Children must not play with the appliance. Cleaning and user maintenance must not be carried out by children without supervision.

PERMITTED USE

CAUTION: The appliance is not intended to be operated by means of an external timer or separate remote controlled system.
This appliance is solely for domestic, not professional use.
Do not use the appliance outdoors.
Do not store explosive or flammable substances such as aerosol cans and do not place or use gasoline or other flammable materials in or near the appliance: a fire may break out if the appliance is inadvertently switched on.
This appliance is intended to be used in household and similar applications such as:
– staff kitchen areas in shops, offices and other working environments;
– farm houses and by clients in hotels, motels and other residential type environments;
– bed and breakfast type environments;
– catering and similar non-retail applications.
The bulb used inside the appliance is specifically designed for domestic appliances and is not suitable for general room lighting within the home (EC Regulation 244/2009).
The appliance is arranged for operation in places where the temperature comes within the following ranges, according to the climatic class given on the rating plate. The appliance may not work properly if it is left for a long time at a temperature outside the specified range.
Climatic Class Amb. T. (°C)
SN From 10 to 32
N From 16 to 32
ST From 16 to 38
T From 16 to 43
This appliance does not contain CFCs. The refrigerant circuit contains R600a (HC).
Appliances with Isobutane (R600a): isobutane is a natural gas without environmental impact, but is flammable. Therefore, make sure the refrigerant circuit pipes are not damaged. Keep special attention in case of damaged pipes emptying the refrigerant circuit.
WARNING : Do not damage the appliance refrigerant circuit pipes.
WARNING : Keep ventilation openings, in the appliance enclosure or in the built-instructure, clear of obstruction.
WARNING : Do not use mechanical, electric or chemical means other than those recommended by the Manufacturer to speed up the defrost process.
WARNING : Do not use or place electrical devices inside the appliance compartments if they are ot of the type expressly authorised by the Manufacturer.
WARNING : Ice makers and or water dispencers not directly connected to the water supply must be filled with potable water only.
WARNING : Automatic ice-makers and/or water dispensers must be connected to a water supply that delivers potable water only, with main water pressure between 0,17 and 0,81 MPa (1,7 and 8,1 bar).
Do not swallow the contents (non-toxic) of the ice packs (in some models).
Do not eat ice cubes or ice lollies immediately after taking them out of the freezer since they may cause cold burns.
For products designed to use an air filter inside an accessible fan cover, the filter shall be always in position when the refrigerator is in function.
Do not store glass containers with liquids in the freezer compartment since they may break.
Do not obstruct the fan (if available) with food items.
After placing the food check if the door of compartments closes properly, especially the freezer door.
Damaged gasket must be replaced as soon as possible.
Use the refrigerator compartment only for storing fresh food and the freezer compartment only for storing frozen food, freezing fresh food and making ice cubes.
Avoid storing unwrapped food in direct contact with internal surfaces of the refrigerator or freezer compartments.

Appliances could have special compartments (Fresh Food Compartment, Zero Degree Box,...).In case not differently specified in the specific booklet of product, they can be removed, maintaining equivalent performances.
C-Pentane is used as blowing agent in the insulation foam and it is a flammable gas.

INSTALLATION

The appliance must be handled and installed by two or more persons. Use protective gloves to unpack and install the appliance.
Installation and repairs must be carried out by a qualified technician, in compliance with the manufacturer's instructions and local safety regulations. Do not repair or replace any part of the appliance unless specifically stated in the user manual.
Children should not perform installation operations. Keep children away during installation. Keep the packaging materials (plastic bags, polystyrene parts, etc.) out of reach of children, during and after the installation.
Be careful not to damage the floors (e.g. parquet) when moving the appliance. Install the appliance on a floor or support strong enough to take its weight and in a place suitable for its size and use.
After unpacking the appliance, make sure that it has not been damaged during transport. In the event of problems, contact the dealer or your nearest After-sales Service.
The appliance must be disconnected from the power supply before any installation operation.
During installation, make sure the appliance does not damage the power cable.
To guarantee adequate ventilation, leave a space on both sides and above the appliance. The distance between the rear of the appliance and the wall behind the appliance should be 50mm, to avoid access to hot surfaces. A reduction of this space will increase the Energy consumption of product.
Only activate the appliance when the installation has been completed.
Wait at least two hours before switching the appliance on, to ensure that the refrigerant circuit is fully efficient.
Make sure the appliance is not near a heat source.

ELECTRICAL WARNINGS

For installation to comply with current safety regulations, an omnipolar switch with minimum contact gap of 3 mm is required and the appliance must be earthed.
If the power cable is damaged, replace with an identical one.
The power cable must only be replaced by a qualified technician in compliance with the manufacturer instruction and current safety regulations.
Contact an authorized service center.
If the fitted plug is not suitable for your socket outlet, contact a qualified technician.
The power cable must be long enough to connect the appliance, once fitted in its housing, to the main power supply. Do not pull the power supply cable.
Do not use extension leads, multiple sockets or adapters.
Do not operate this appliance if it has a damaged mains cord or plug, if it is not working properly, or if it has been damaged or dropped. Keep the cord away from hot surfaces.
The electrical components must not be accessible to the user after installation.
Do not touch the appliance with any wet part of the body and do not operate it when barefoot.

CLEANING AND MAINTENANCE

Never use steam cleaning equipment.
Wear protective gloves for cleaning and maintenance.
The appliance must be disconnected from the power supply before any maintenance operation.
Do not use abrasive or harsh cleaners such as window sprays, scouring cleansers, flammable fluids, cleaning waxes, concentrated detergents, bleaches or cleansers containing petroleum products on plastic parts, interior and door liners or gaskets. Do not use paper towels, scouring pads, or other harsh cleaning tools.

SAFEGUARDING THE ENVIRONMENT

DISPOSAL OF PACKAGING MATERIALS

The packaging material is 100% recyclable and is marked with the recycle symbol.
The various parts of the packaging must therefore be disposed of responsibility and in full compliance with local authority regulations governing waste disposal.

SCRAPPING OF HOUSEHOLD APPLIANCES

When scrapping the appliance, make it unusable by cutting off the power cable and removing the doors and shelves (if present) so that children cannot easily climb inside and become trapped.
This appliance is manufactured with recyclable or reusable materials.
Dispose of it in accordance with local waste disposal regulations.
For further information on the treatment, recovery and recycling of household electrical appliances, contact your competent local authority, the collection service for household waste or the store where you purchase the appliance.

This appliance is marked in compliance with European Directive 2012/19/EU, Waste Electrical and Electronic Equipment (WEEE).
By ensuring this product is disposed of correctly, you will help prevent potential negative consequences for the environment and human health, which could otherwise be caused by inappropriate waste handling of this product.
The symbol on the product or on the accompanying documentation indicates that it should not be treated as domestic waste but must be taken to an appropriate collection center for the recycling of electrical and electronic equipment.

ENERGY SAVING TIPS

Install the appliance in a dry, well ventilated room far away from any heat source (eg. radiator, cooker, etc.) and in place not exposed directly to the sun. If required, use an insulating plate.
To guarantee adequate ventilation follow installation instructions.
Insufficient ventilation on back of the product increases energy consumption and decreases cooling efficiency.

Frequent door opening might cause an increase in Energy consumption.
The internal temperatures of the appliance and the Energy Consumption may be affected by the ambient temperature, frequency of door opening, as well as location of the appliance. Temperature setting should take into consideration these factors.
Reduce to a minimum door opening.
When thawing frozen food, place them in the refrigerator. The low temperature of the frozen products cools the food in the refrigerator.
Allow warm food and drinks to cool down before placing in the appliance.
Positioning of the shelves in the refrigerator has no impact on the efficient usage of energy. Food should be placed on the shelves in such way to ensure proper air circulation (food should not touch each other and distance between food and rear wall should be kept).
You can increase storage capacity of frozen food by removing baskets and, if present, Stop Frost shelve, maintaining an equivalent energy consumption.
High energy class products are fitted with high efficiency motors that remain operational for longer, but have a low power consumption. Do not worry if the engine continues to run for longer periods.

DECLARATION OF CONFORMITY

This appliance has been designed, constructed and distributed in compliance with the requirements of European Directives:
LVD 2014/35/EU, EMC 2014/30/EU and RoHS 2011/65/EU.

This appliance has been designed, constructed and distributed in compliance with the Ecodesign and energy Labeling Requirements of EC Directives: 2009/125/EC and 2010/30/EU.

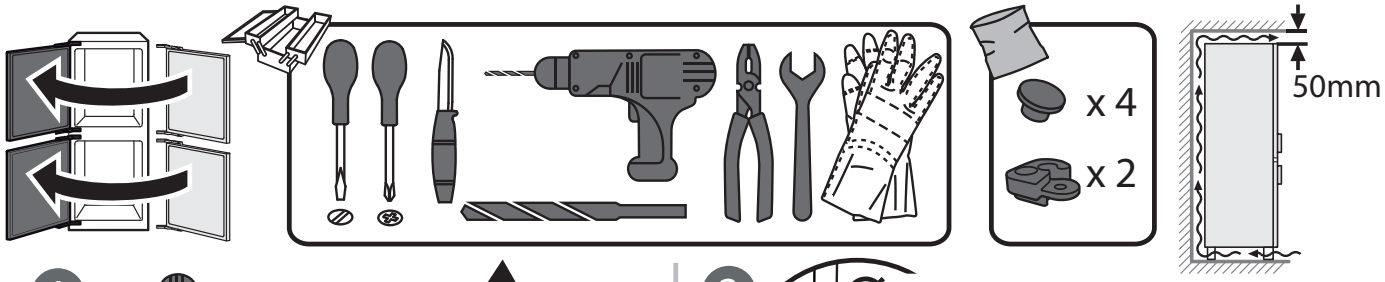

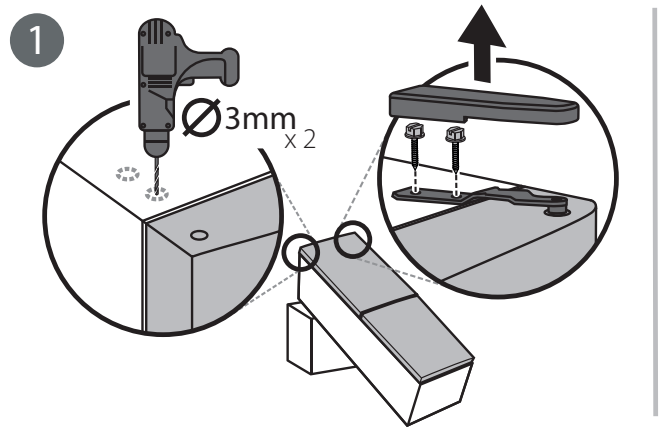

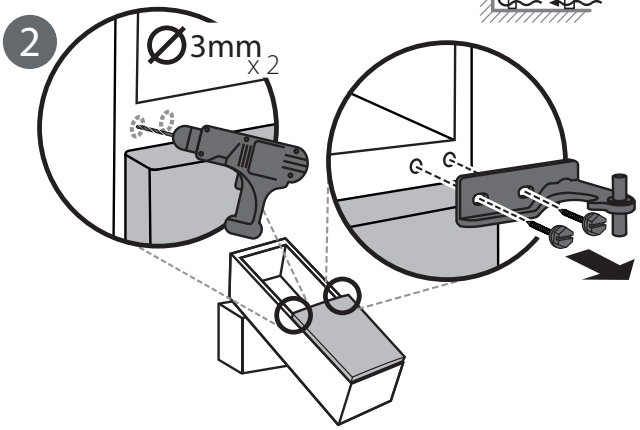

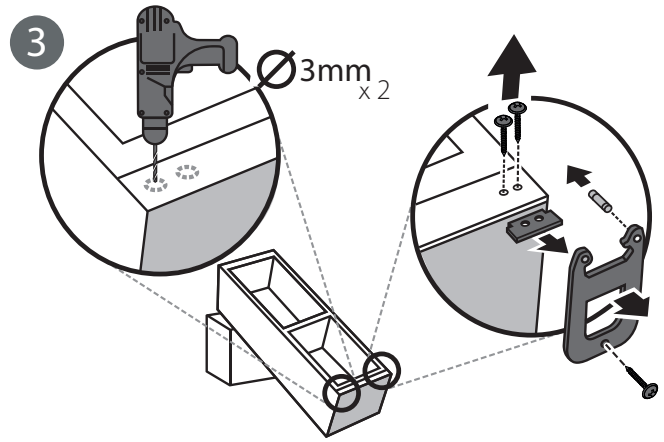

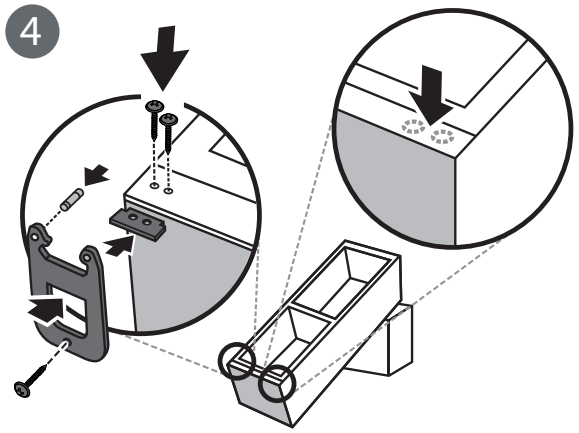

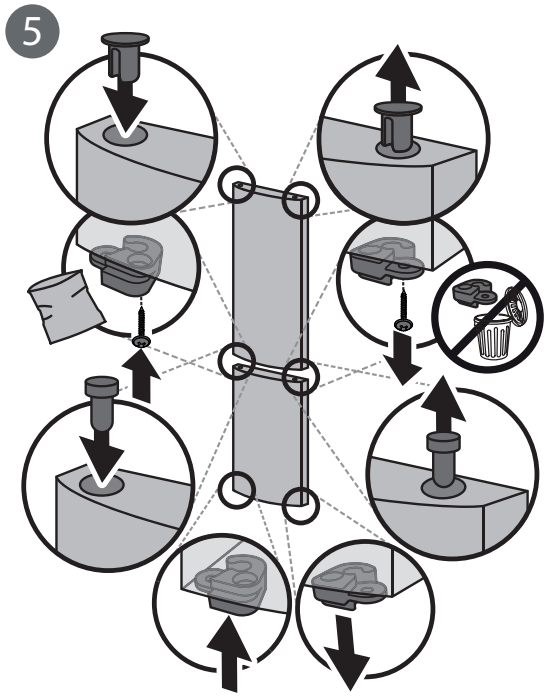

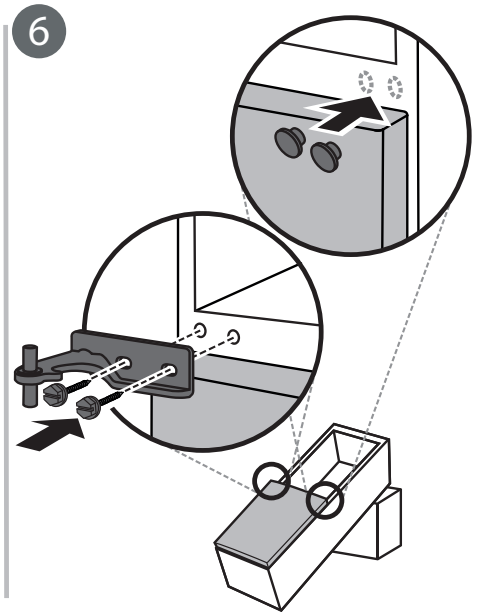

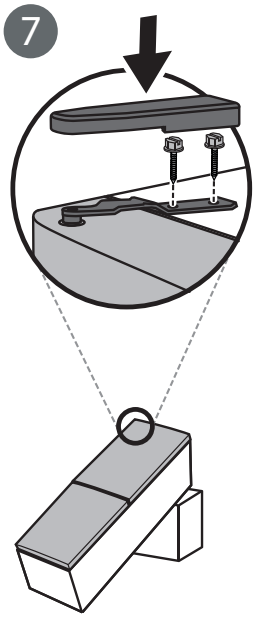





19515253800