



ICY BOX
IB-MS202-T

Vertical Monitor stand for two monitors up to 30"



Key features

- IB-MS202-T remains the classic multiple stand design and makes it more slim and ergonomic
- Easy Cable™ Management cover & column to make the cables tidy & well arranged
- Smart Torque Adjust™ is always available at every hinge module to meet various weights implemented
- Vertically adjustable VESA™ support for a wide range of screen dimensions
- For screens size up to 30" (76 cm) diagonal screen measurement
- Special metal foot design to guarantee stability
- Simple monitor height setup
- Supports 200x100, 100x100 and 75x75 VESA standards

Packing content
IB-MS202-T, allen wrench, set of screws, quick installation guide

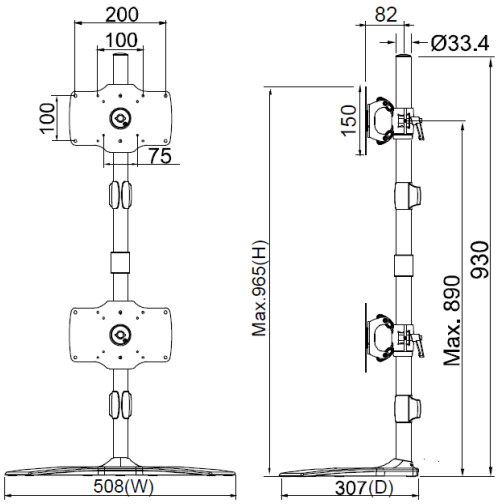

Technical data

Model	IB-MS202-T
Article no.	60562
EAN	4250078169376
Brand	ICY BOX
Colour	Black
Material	Steel / plastic / aluminum alloy
Maximum size of monitor	30" (76 cm)
Number of monitors	2
Max. weight of monitor	12 kg/monitor
VESA® - tilt (hinge)	+/- 15° vertical
VESA® - rotate (pivot)	360° horizontal
VESA® compatible	200x100, 100x100 and 75x75
Mounting	Full metall freestanding base

RaidSonic Technology GmbH • Kurt-Fischer-Straße 50 • 22926 Ahrensburg / Germany
Telephone: +49-(0)4102 – 468 900 (Sales) • Fax: +49-(0)4102 – 468 901 • info@raidsonic.de • www.raidsonic.de
Offers and deliveries are only done under our General Terms and Conditions. Errors and omissions excepted.

RaidSonic Technology GmbH

ICY BOX®

www.raidsonic.de





ICY BOX **IB-MS202-T**
Vertical Monitor stand for two monitors up to 30"



Slim and ergonomically designed

The stand for two monitors, each with a maximum screen size of 30" (screen diagonal: 76 cm, max 12 kg per monitor) is made entirely of high quality steel and an aluminum alloy and provides very high stability. The design has also been taken to ensure that it doesn't take up too much space on the table, and that the use of screens is ergonomically.

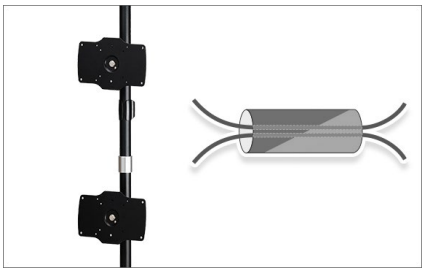

For optimal order...

At work or at home on your PC, the monitor holder has an Easy Cable™ cable guide on the back. In order to balance the weights of different weighted screens well, a Smart Torque Adjust™ torque adjustment ensures that each VESA® mount is stable.

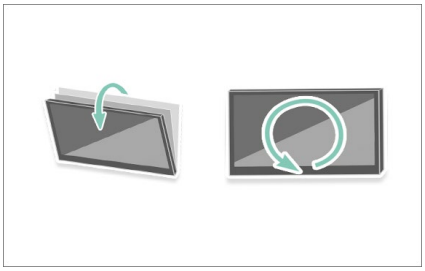

User-friendly orientation

The various components of the mount can be rotated in different angles up to 360°. It also has the ability to shift the entire screen mounts up or down and direct the screens with an inclination angle of up to 15° depending on your own wishes.

Logistical data

Packing unit:	1 pcs./carton	**Dimension/carton:**	560x350x170 mm
Total weight:	4.86 kg/carton	**Dimension** (with packing)**:**	560x350x170 mm
Gross weight (with packing)**:**	4.86 kg	**Dimension of article:**	240x423x730 mm
Net weight:	3.66 kg	**Country of origin:**	China

RaidSonic Technology GmbH • Kurt-Fischer-Straße 50 • 22926 Ahrensburg / Germany
Telephone: +49-(0)4102 – 468 900 (Sales) • Fax: +49-(0)4102 – 468 901 • info@raidsonic.de • www.raidsonic.de
Offers and deliveries are only done under our General Terms and Conditions. Errors and omissions excepted.

RaidSonic Technology GmbH