EN **User Manual**
Dishwasher

F55210VI0



AEG

CONTENTS

1. SAFETY INFORMATION....3
2. SAFETY INSTRUCTIONS....4
3. PRODUCT DESCRIPTION....5
4. CONTROL PANEL....6
5. PROGRAMMES....6
6. DAILY USE....8
7. HINTS AND TIPS....11
8. CARE AND CLEANING....12
9. TROUBLESHOOTING....13
10. INSTALLATION....15
11. TECHNICAL INFORMATION....18

FOR PERFECT RESULTS

Thank you for choosing this AEG product. We have created it to give you impeccable performance for many years, with innovative technologies that help make life simpler features you might not find on ordinary appliances. Please spend a few minutes reading to get the very best from it.
Visit our website for:



Get usage advice, brochures, trouble shooter, service information:
www.aeg.com/webselfservice



Register your product for better service:
www.registeraeg.com



Buy Accessories, Consumables and Original spare parts for your appliance:
www.aeg.com/shop

CUSTOMER CARE AND SERVICE

Always use original spare parts.
When contacting our Authorised Service Centre, ensure that you have the following data available: Model, PNC, Serial Number.
The information can be found on the rating plate.

Warning / Caution-Safety information

General information and tips

Environmental information

Subject to change without notice.

1. ⚠ SAFETY INFORMATION

Before the installation and use of the appliance, carefully read the supplied instructions. The manufacturer is not responsible if an incorrect installation and use causes injuries and damages. Always keep the instructions with the appliance for future reference.

1.1 General Safety

- This appliance is intended to be used in household and similar applications such as:
  - farm houses; staff kitchen areas in shops, offices and other working environments;
  - by clients in hotels, motels, bed & breakfast and other residential type environments.
- Do not change the specification of this appliance.
- The operating water pressure (minimum and maximum) must be between 0.3 (0.03) / 10 (1) bar (Mpa)
- Obey the maximum number of 6 place settings.
- If the supply cord is damaged, it must be replaced by the manufacturer, its Authorised Service Centre or similarly qualified persons in order to avoid a hazard.
- Put knives and cutlery with sharp points in the cutlery basket with the points down or in a horizontal position.
- Do not keep the appliance door open without supervision to prevent to fall on it.
- Before maintenance, deactivate the appliance and disconnect the mains plug from the mains socket.
- Do not use water spray and steam to clean the appliance.
- The ventilation openings in the base (if applicable) must not be obstructed by a carpet.
- The appliance is to be connected to the water mains using the new supplied hose-sets. Old hose sets must not be reused.

1.2 Children and vulnerable people safety

- This appliance can be used by children aged from 8 years and above and persons with reduced physical, sensory or mental capabilities or lack of experience and knowledge if they have been given supervision or instruction concerning use of the appliance in a safe way and understand the hazards involved.
- Do not let children play with the appliance.
- Keep all detergents away from children.
- Keep children and pets away from the appliance door when it is open.
- Cleaning and user maintenance shall not be made by children without supervision.

2. SAFETY INSTRUCTIONS

2.1 Installation

- Remove all the packaging.
- Do not install or use a damaged appliance.
- Do not install or use the appliance where the temperature is less than 0 °C.
- Obey the installation instruction supplied with the appliance.
- Do not move the appliance without disconnecting it from the electrical supply.
- The appliance must be installed in a cabinet.
- Do not use the appliance without a wooden panel, assembled on the door.

2.2 Electrical connection



WARNING!
Risk of fire and electrical shock.

- The appliance must be earthed.
- Make sure that the electrical information on the rating plate agrees with the power supply. If not, contact an electrician.
- Always use a correctly installed shockproof socket.
- Do not use multi-plug adapters and extension cables.
- Make sure not to cause damage to the mains plug and to the mains cable. Should the mains cable need to be replaced, this must be carried out by our Authorised Service Centre.
- Connect the mains plug to the mains socket only at the end of the installation. Make sure that there is access to the mains plug after the installation.
- Do not pull the mains cable to disconnect the appliance. Always pull the mains plug.
- This appliance complies with the E.E.C. Directives.
- Only for UK and Ireland. The appliance has a 13 amp mains plug. If it is necessary to change the fuse in the mains plug, use fuse: 13 amp ASTA (BS 1362).

2.3 Water connection

- Make sure not to cause damage to the water hoses.
- Before you connect the appliance to new pipes or pipes not used for a long time, let the water flow until it is clean.
- The first time you use the appliance, make sure that there is no leakage.

- If the water inlet hose is damaged, immediately disconnect the mains plug from the mains socket. Contact the Authorised Service Centre to replace the water inlet hose.

2.4 Use

- Do not sit or stand on the open door.
- Dishwasher detergents are dangerous. Obey the safety instructions on the detergent packaging.
- Do not drink and play with the water in the appliance.
- Do not remove the dishes from the appliance until the programme is completed. There can be detergent on the dishes.
- The appliance can release hot steam if you open the door while a programme operates.
- Do not put flammable products or items that are wet with flammable products in, near or on the appliance.

2.5 Disposal

WARNING!
Risk of injury or suffocation.

- Disconnect the appliance from the mains supply.
- Cut off the mains cable and discard it.
- Remove the door catch to prevent children and pets to get closed in the appliance.

3. PRODUCT DESCRIPTION

3.1 General overview

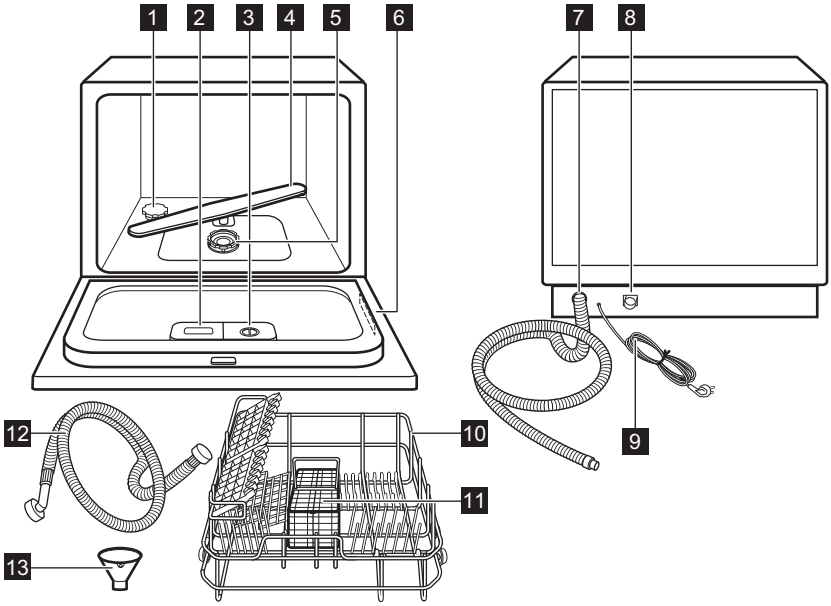

1 Salt container
2 Detergent dispenser
3 Rinse aid dispenser
4 Spray arm
5 Filters
6 Rating plate
7 Drain hose
8 Inlet hose connection

9 Mains cable
10 Basket
11 Cutlery basket
12 Inlet hose
13 Funnel

4. CONTROL PANEL

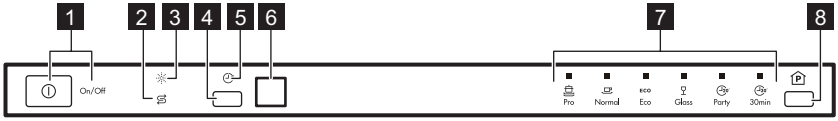

1 On/off button and indicator
2 Salt indicator
3 Rinse aid indicator
4 Delay Start
5 Delay Start indicator
6 Display
7 Programmes indicators
8 Programmes

5. PROGRAMMES

5.1 Programmes

Programme	Degree of soiling Type of load	Phases in the cycle	Detergent pre-wash / main wash	Duration (min)	Energy (kWh)	Water (l)	Rinse aid
Pro	Heavy , dried-on soiling Pans, pots, casserole dishes	• Pre-wash 50°C • Wash 70 °C • Rinse • Rinse 70 °C • Drying	3g / 15g	145	0.94	11	YES
Normal	Normal soiling Pots, plates, glasses, pans	• Pre-wash • Wash 60 °C • Rinse • Rinse 70 °C • Drying	3g / 15g	125	0.70	8.4	YES

Programme	Degree of soiling Type of load	Phases in the cycle	Detergent pre-wash / main wash	Duration (min)	Energy (kWh)	Water (l)	Rinse aid
ECO Eco EN 50242	Normal soiling Crockery, cutlery	• Pre-wash • Wash 50 °C • Rinse • Rinse 70 °C • Drying	3g / 15g	170	0.61	7.0	YES
Glass	Normal or light soiling Glasses, crystal, fine china	• Wash 45 °C • Rinse • Rinse 60 °C • Drying	15g	75	0.48	6.8	YES
Party	Fresh soiling Coffee cup, glasses	• Wash 45 °C • Rinse 40 °C	5g	20	0.30	7.0	
30min	Light soiling All	• Wash 40 °C • Rinse • Rinse	15g	30	0.30	6.0	

5.2 Setting and starting a programme

Starting a programme

Open the water tap.

1. Open the appliance door.
2. Press the on/off button to activate the appliance.

The on/off indicator comes on.

3. To set a programme, press Programmes until the indicator of the selected programme comes on.
4. Close the door.

Programme starts automatically after 10 seconds.

Starting a programme with Delay Start

1. Open the water tap.
2. Press the on/off button to activate the appliance.

The on/off indicator comes on.

3. Set a programme.
4. Press Delay Start to delay start of a programme by up to 24 hours.

The pre-wash indicator comes on.

5. Close the door to start the countdown.

When the countdown is completed, the programme starts automatically.

Cancelling Delay Start

1. Press Start / Pause.
2. Press Delay Start until 0 comes on.
3. Press Start / Pause. The programme starts automatically.

Interrupting a programme

1. Open the appliance door.

The appliance stops.

2. Close the appliance door.
The programme continues from the point of interruption.

Cancelling a programme

Press and hold Programmes for about 3 seconds to cancel the programme.

Make sure that there is detergent in the detergent dispenser before you start a new programme.

End of a programme

When a programme is completed, an intermittent acoustic signal sounds for approximately 8 seconds.

1. Press the on/off button to deactivate the appliance.
2. Close the water tap.

- Let the dishes become cold before you remove them from the appliance. Hot dishes can be easily damaged.
- There can be water on the sides and on the door of the appliance. Stainless steel becomes cool more quickly than the dishes.

6. DAILY USE

6.1 Use of the appliance

1. Fill the salt container with salt for dishwashers.
2. Fill the rinse aid dispenser with rinse aid.
3. Load the basket.
4. Open the water tap.
5. Set the correct programme for the type of load and the degree of soil.
6. Add the detergent.
7. Start the programme.

6.2 Use of dishwasher salt

Hard water contains a high quantity of minerals that can cause damage to the appliance and bad washing results. The water softener neutralises these minerals.

Contact your local water authority for information about the hardness of the water in your area.

CAUTION!
Only use salt specifically designed for dishwashers. Other types of salt will cause damage to the appliance.

Filling the salt container

1. Turn the cap of the salt container counterclockwise and remove it.
2. Put 1 litre of water in the salt container (Only for the first time).
3. Use the funnel to fill the salt container with dishwasher salt.

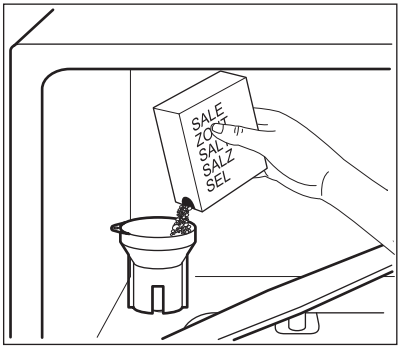

4. Remove the salt around the opening of the salt container.
5. Turn the cap of the salt container clockwise to close the salt container.

Water and salt can come out from the salt container when you fill it which poses a risk of corrosion. To prevent it, start a programme immediately after filling the salt container.

Refill the salt container when salt indicator on the display comes on.

The water softener

The water softener removes minerals from the water supply, which would have a detrimental effect on the washing results and on the appliance.

The higher the content of these minerals, the harder your water is. Water hardness is measured in equivalent scales.

The water softener should be adjusted according to the hardness of the water in your area. Your local water authority can advise you on the hardness of the water in your area. It is important to set the right level of the water softener to assure good washing results.

To change the water softener setting:

1. Open the door
2. Press and hold Programme for 5 seconds . Current water softener level appears.
3. Press Programme to set the necessary water softener level
4. Do not change the setting for 5 seconds to confirm the choice.

Water hardness

Water hardness		Water softener level
German degrees (°dH)	International unit (mmol/l)	
0 - 5	0.0 - 0.9	H1
6 - 11	1.0 - 2.0	H2
12 - 17	2.1 - 3.0	H3
18 - 22	3.1 - 4.0	H4
23 - 34	4.1 - 6.1	H5
35 - 45	6.2 - 8.0	H6[1)]

1) Factory setting.

If you use standard detergent, set a proper water hardness level to keep the salt refill indicator active.

6.3 Use of detergent

CAUTION!
Use only detergents for dishwashers.

To help the environment, do not use more than the recommended quantity of detergent given by the detergent manufacturer.

Refill the detergent dispenser before each wash cycle.

Filling the detergent dispenser

1. Press the release button to open the lid of the detergent dispenser.

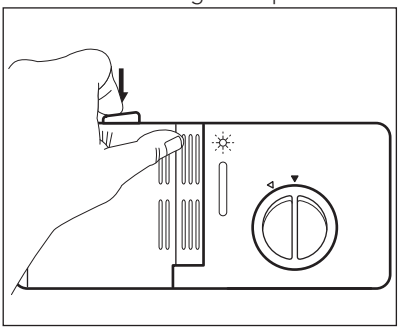

2. Put the detergent (approximately 15 g) in the compartment (**C**). The compartment has 2 parts (**D**) and (**E**) that refer to different quantities of detergent (15 g and 25 g). Put

detergent tablets in part (**E**) of the compartment.

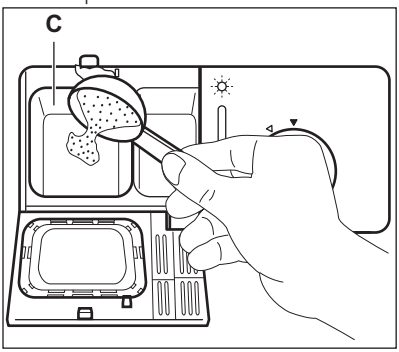

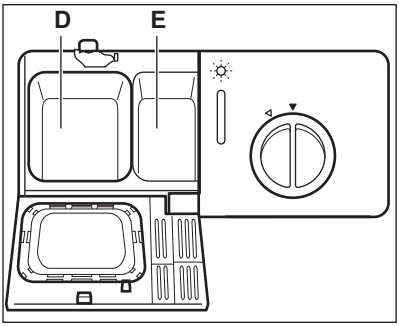

3. Close the detergent dispenser. Press the lid until the release button locks into position.
4. If the programme has a prewash phase, put a small quantity of detergent (approximately 3 g) on the lid of the detergent dispenser.

Detergent tablets do not fully dissolve with short programmes and detergent residues can remain on the dishes when the programme is completed.
We recommend that you use detergent tablets with long programmes.

6.4 Using again separately detergent, salt and rinse aid

1. Fill the salt container and the rinse aid dispenser.
2. Start a programme without loading dishes.
3. When the programme is completed, adjust the position of the rinse aid dispenser.

6.5 Use of rinse aid

CAUTION!
Only use rinse aid specifically designed for dishwashers.

Rinse aid helps to dry the dishes without streaks and stains.
The rinse aid is automatically released during the last rinsing phase.

Filling the rinse aid dispenser

1. Turn the cap (**A**) counterclockwise and remove it.

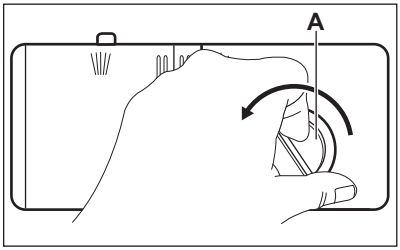

2. Fill the rinse aid dispenser (**B**) with rinse aid. The mark ''MAX'' shows the maximum level.

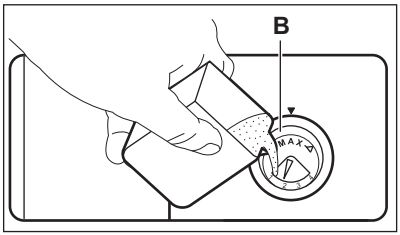

3. Remove the spilled rinse aid with an absorbent cloth to prevent too much foam during the programme.
4. Put the cap on again and turn it clockwise until it locks. Make sure that the signs on the cap and on the dispenser are aligned.

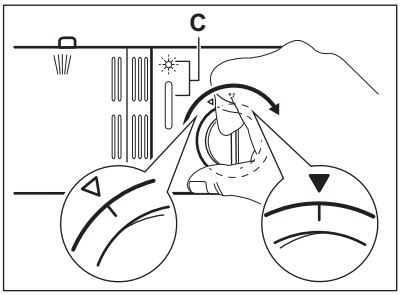

Refill the rinse aid dispenser when the rinse aid indicator (**C**)on the display comes on.

Adjust the rinse aid dosage

Factory setting: position 3.

You can set the rinse aid dosage between position 1 (lowest dosage) and position 4 (highest dosage).

Turn the rinse aid selector (**A**) to increase or decrease the dosage.

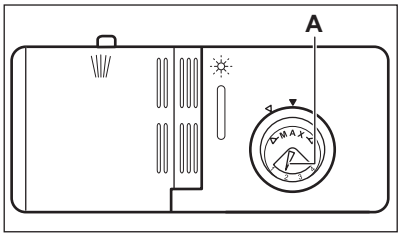

7. HINTS AND TIPS

7.1 Loading the basket

The rows of prongs in the basket can be lowered to load pots, pans and bowls.

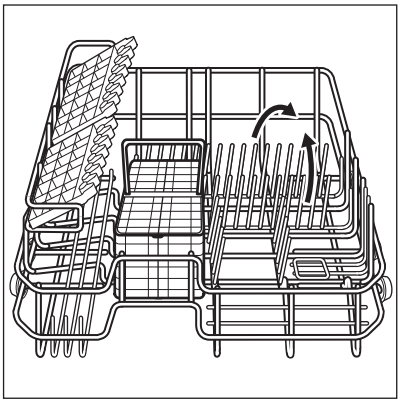

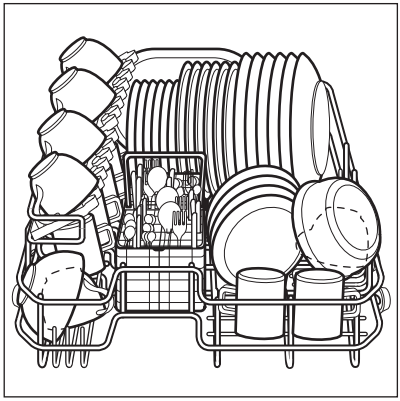

Mix spoons with other cutlery to prevent them from bonding together.

The cutlery basket has 2 cutlery grids that can be easily removed.

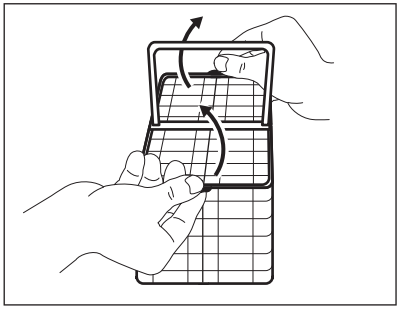

CAUTION!
Make sure that the spray arm can turn freely before you start a programme.

7.2 Hints and tips

- Do not put in the appliance items that can absorb water (sponges, household cloths).
- Remove the remaining food from the items.
- Make soft the remaining burned food on the items.
- Put hollow items (cups, glasses and pans) with the opening down.
- Make sure that water does not collect in containers or in bowls.
- Make sure that cutlery and dishes do not bond together.
- Make sure that the glasses do not touch with each other.
- Put small items in the cutlery basket.
- Mix the spoons with other cutlery to prevent them to bond together.
- When you put items in the basket make sure that water can reach all surfaces.
- Make sure that light items cannot move.
- Water droplets can collect on plastic items and non-stick pans.
- Long bladed knives are potential hazard when positioned vertically.

8. CARE AND CLEANING

8.1 Maintenance

WARNING!
Before maintenance, deactivate the appliance and disconnect the mains plug from the mains socket.

CAUTION!
Do not use the appliance without filters.
Make sure that the filters are correctly positioned. An incorrect positioning of the filters will cause bad washing results and damage to the appliance.

Dirty filters and a clogged spray arm decrease the washing results. Regularly check and if necessary, clean the filters.

8.2 Removing and cleaning the filters

The filter consists of three parts.
A. Coarse filter
B. Fine filter
C. Main filter

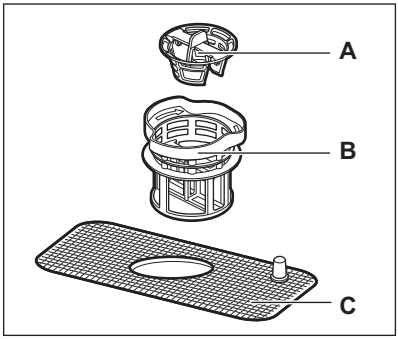

1. Turn the fine filter (**B**) counterclockwise and remove the filter assembly.
2. Remove the coarse filter (**A**) by pulling it out from the fine filter (**B**).
3. Fully wash the filters with water and a brush.
4. Put the coarse filter (**A**) into the fine filter (**B**).
5. Put the filter assembly into the tub and turn the fine filter (**B**) clockwise until it locks.

8.3 To clean the spray arm

Do not remove the spray arm. If the holes in the spray arm are clogged, remove remaining parts of soil with a thin pointed object.

8.4 To clean the external surfaces

Clean the external surfaces of the appliance and the control panel with a moist soft cloth.

Only use neutral detergents.

Do not use abrasive products, abrasive cleaning pads or solvents (e.g. acetone).

8.5 Protecting against frost

Protect the appliance from frost, for example in winter. After each cycle:

1. Disconnect the appliance from the electrical supply.
2. Shut off water supply and disconnect the water inlet pipe from the water valve.
3. Drain water from the inlet pipe and water valve.
4. Connect the water inlet pipe to the water valve.
5. Remove the filter at the bottom of the tub and use a sponge to collect water from the sump.

9. TROUBLESHOOTING

WARNING!
Refer to Safety chapters.

9.1 What to do if...

If the appliance does not start or it stops during operation, before you contact an Authorised Service Centre, check if you can solve the problem by yourself with the help of the information in the table.

With some problems programme indicators flash intermittently indicating a malfunction.

Problem and alarm code	Possible solution
The appliance does not fill with water. • The programme indicator ''Rinse & Hold'' flashes very quickly. • An intermittent acoustic signal sounds for approximately 30 seconds.	• Make sure that the water tap is open. • Make sure that the pressure of the water supply is not too low. For this information, contact your local water authority. • Make sure that the water tap is not clogged.
The anti-flood device is on. • The programme indicator ''Delicate 45°'' flashes very quickly. • An intermittent acoustic signal sounds for approximately 30 seconds.	• Close the water tap and contact an Authorised Service Centre.
You cannot activate the appliance.	• Make sure that the mains plug is connected to the mains socket. • Make sure that there is no damaged fuse in the fuse box.
The programme does not start.	• Make sure that the appliance door is closed. • Press the start button. • If the delay start is set, cancel the setting or wait for the end of the countdown.

Problem and alarm code	Possible solution
The appliance does not drain the water.	• Make sure that the drain hose is correctly connected. • Make sure that the filters in the appliance are clean. • Make sure that the kitchen sink drains correctly.

Once you have checked the appliance, set and start the programme again. If the problem occurs again, contact an Authorised Service Centre.

For alarm codes not described in the table, contact an Authorised Service Centre.

The necessary information for the Service Centre is on the rating plate. record this information:

- Model .....
- Serial number (SN.) .....

9.2 The washing and drying results are not satisfactory

Problem	Possible cause	Possible solution
The dishes are not clean.	The selected programme was not applicable for the type of load and/or for the degree of soil.	Make sure that the programme is applicable for the type of load and/or for the degree of soil.
	The basket was not loaded correctly, water did not reach all surfaces.	Load the basket correctly.
	The spray arm could not turn freely because of the incorrect arrangement of the load.	Make sure that the spray arm can turn freely before you start a programme.
	The filters are clogged.	Make sure that the filters are clean.
	The filters are not correctly assembled and installed.	Make sure that the filters are correctly assembled and installed.
	The quantity of detergent was not enough or no detergent was used.	Make sure that a correct amount of detergent is used.
Scale particles on the dishes.	The salt container is empty.	Fill the salt container with specific salt for dishwashers.
	The cap of the salt container is not closed correctly.	Make sure that the salt container is correctly closed.
There are streaks or milky stains on glasses and dishes.	The level of the water softener is too high.	Set the water softener to a lower level.

Problem	Possible cause	Possible solution
There are bluish layers on glasses and dishes.	The rinse aid dosage is too high.	Set the rinse aid dispenser to a lower position.
	The detergent can be the cause.	Try a different brand of detergent.
The dishes are wet and dull.	A programme without a drying phase has been selected.	Set a programme with a drying phase.
	The rinse aid dispenser is empty.	Fill the rinse aid dispenser with rinse aid.

9.3 Error codes

Code	Meaning	Possible cause
E1	Longer inlet time	Tap is not open or water intake is restricted or water pressure is too low
E4	Overfilled	Too much inlet water or some dishwasher element leaks

10. INSTALLATION

10.1 Assembly

Make sure to position the appliance with minimum space of 50mm on both sides of fully open door.

Keep 5 mm distance between both sides of the appliance and the cabinet. There are two possibilities for the cabinet hole for the appliance.

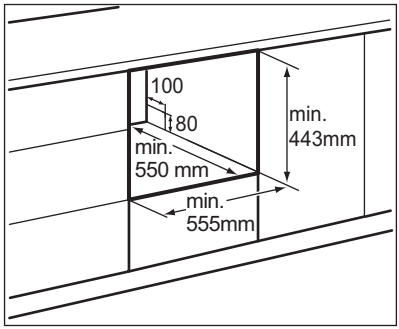

1 Power cord, drain hose and water supply line hole. To facilitate a proper installation, position the hole to the right or the the left of the appliance.

10.2 Aesthetic panel

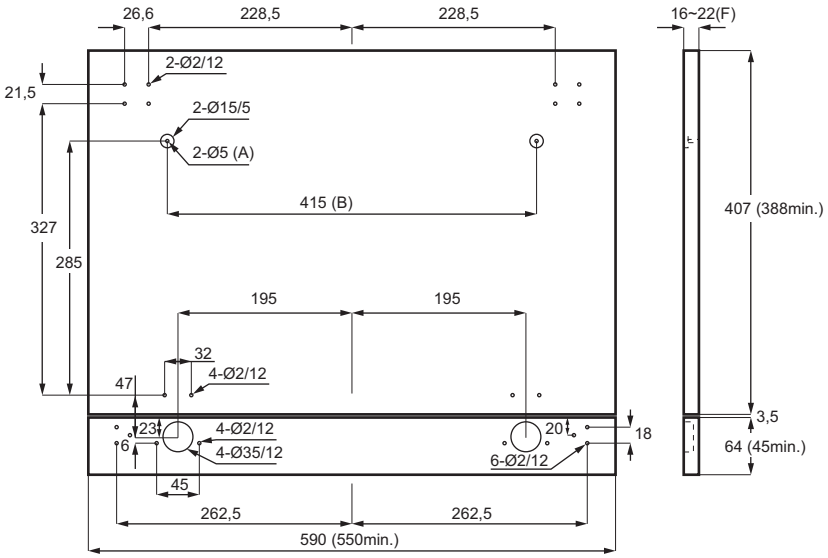

Aesthetic panel dimensions

Dimension	Value (mm)
Width	590 (min. 550)
Height	407 (min. 388)
Thickness	16 - 22

Installation of aesthetic panel

1. Assemble the handle, hinge and bracket.

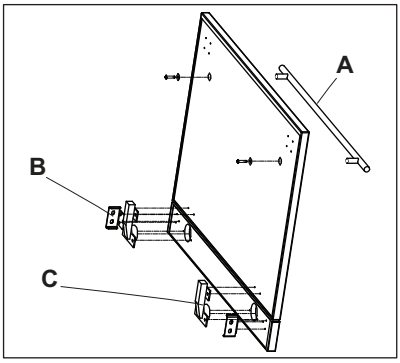

A. Handle
B. Bracket, screws 4*12
C. Hinge, screws 4.2*16

2. Fix the panel onto the door with screws.

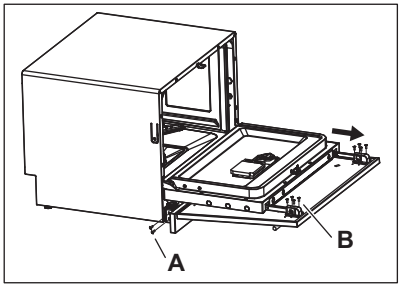

A. Screw 4*12
B. Screw 4.2*16

10.3 Tension adjustment of the door spring

CAUTION!
To adjust the door spring call an Authorised Service Centre.

The door springs are set at the factory to the proper tension for the outer door. If you install aesthetic panel, adjust the door spring tension. To strain or relax the steel cable, rotate the adjusting screws.

Door spring tension is correct when the door remains horizontal in the fully open position, yet, you can close them with a slight move of a finger .

10.4 Electrical connection

WARNING!
Do not use an extension cord or and adapter plug with this appliance.

WARNING!
Do not cut or remove the earthing.

WARNING!
Make the electrical connection with the power cord.

For rating voltage check the rating plate.

10.5 Water drain connection

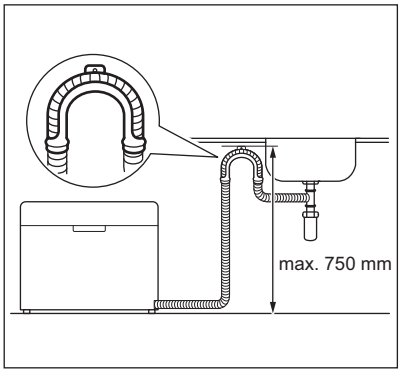

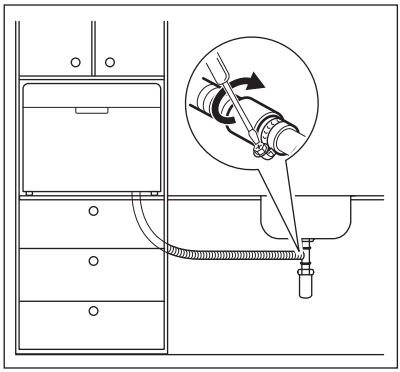

- Connect the water drain hose into a drain pipe with minimum diameter of 40 mm.
- Put the water drain hose directly into the sink. use the special plastic support.

The water drain hose must be less than 750 mm from the bottom of the appliance to prevent problems during the draining phases.

Remove the sink plug when the appliance drains water to prevent that the water goes back into the appliance.

The extension of the water drain hose must not be longer than 2 m. The internal diameter must not be smaller than the diameter of the drain hose.

If you connect the water drain hose to a trap spigot under the sink, remove the plastic membrane (**A**). If you do not remove the membrane, remaining food can cause a blockage in the drain hose spigot.

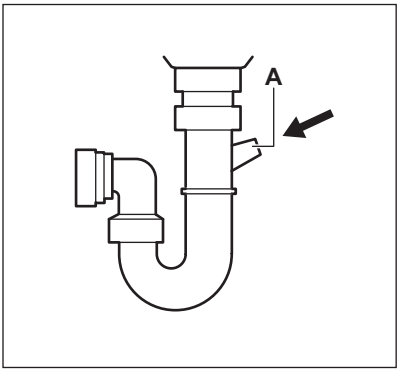

11. TECHNICAL INFORMATION

11.1 Technical table

Water pressure	0.04 - 1.0 MPa
Power supply	Refer to rating plate
Capacity	6 place settings
Type / Description	WQP6-3305E
Standard place settings	6
Energy efficiency class [1)]	A+
Annual energy consumption [2)]	174 kWh
Energy consumption of the standard cleaning cycle	0.61 kWh
Power consumption of off-mode	0 W
Power consumption of left-on mode	0.4 W
Annual water consumption [3)]	1820 l
Drying efficiency class [4)]	B
Standard cleaning cycle [5)]	ECO 50°C
Programme duration of the standard cleaning cycle	170 min
Noise level	54 dB (A) re 1 pW
Mounting	build under
Build-in possibility	Yes
Power consumption	1280 W

Rated voltage / frequency	230 V~/ 50 Hz
Water pressure (flow pressure)	0.4 - 10bar = 0.04 - 1 MPa

1) A+++ (highest efficiency) to D (lowest efficiency)

2) Energy consumption "180" kWh per year, based on 280 standard cleaning cycles using cold water fill and the consumption of the low power modes. Actual energy consumption will depend on how the appliance is used.

3) Water consumption "1960" litres per year, based on 280 standard cleaning cycles. Actual water consumption will depend on how the appliance is used.

4) A (highest efficiency) to G (lowest efficiency)

5) This program is suitable for cleaning soiled normally soiled tableware and that it is the most efficient program in terms of its combined energy and water consumption for that type of tableware.

12. ENVIRONMENT CONCERNS

Please recycle all materials marked with the symbol . Dispose of all packaging materials appropriately and help to protect the environment, and future generations. Do not dispose of electrical equipment marked with the symbol along with the general house hold waste. Dispose all electrical goods via applicable local authority collections, or at local authority or, commercial recycling centres.

www.aeg.com/shop



100001027-A-132016

CE

AEG