FSE83710P

EN **User Manual**
Dishwasher

USER MANUAL

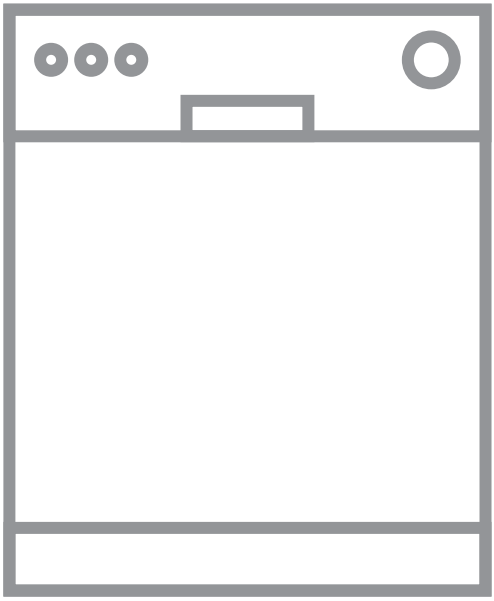

AEG

CONTENTS

1. SAFETY INFORMATION....2
2. SAFETY INSTRUCTIONS....4
3. PRODUCT DESCRIPTION....6
4. CONTROL PANEL....7
5. PROGRAMMES....7
6. SETTINGS....9
7. OPTIONS....13
8. BEFORE FIRST USE....14
9. DAILY USE....15
10. HINTS AND TIPS....17
11. CARE AND CLEANING....18
12. TROUBLESHOOTING....20
13. TECHNICAL INFORMATION....23

FOR PERFECT RESULTS

Thank you for choosing this AEG product. We have created it to give you impeccable performance for many years, with innovative technologies that help make life simpler features you might not find on ordinary appliances. Please spend a few minutes reading to get the very best from it.
Visit our website for:



Get usage advice, brochures, trouble shooter, service information:
www.aeg.com/webselfservice



Register your product for better service:
www.registeraeg.com



Buy Accessories, Consumables and Original spare parts for your appliance:
www.aeg.com/shop

CUSTOMER CARE AND SERVICE

Always use original spare parts.
When contacting our Authorised Service Centre, ensure that you have the following data available: Model, PNC, Serial Number.
The information can be found on the rating plate.

⚠ Warning / Caution-Safety information

ⓘ General information and tips

Environmental information

Subject to change without notice.

1. ⚠ SAFETY INFORMATION

Before the installation and use of the appliance, carefully read the supplied instructions. The

manufacturer is not responsible for any injuries or damages that are the result of incorrect installation or usage. Always keep the instructions in a safe and accessible location for future reference.

1.1 Children and vulnerable people safety

- This appliance can be used by children aged from 8 years and above and persons with reduced physical, sensory or mental capabilities or lack of experience and knowledge if they have been given supervision or instruction concerning the use of the appliance in a safe way and understand the hazards involved.
- Do not let children play with the appliance.
- Keep detergents away from children.
- Keep children and pets away from the appliance when the door is open.
- Children shall not carry out cleaning and user maintenance of the appliance without supervision.

1.2 General Safety

- This appliance is intended to be used in household and similar applications such as:
  - farm houses; staff kitchen areas in shops, offices and other working environments;
  - by clients in hotels, motels, bed & breakfast and other residential type environments.
- Do not change the specification of this appliance.
- The operating water pressure (minimum and maximum) must be between 0.5 (0.05) / 8 (0.8) bar (MPa)
- Obey the maximum number of 15 place settings.
- If the supply cord is damaged, it must be replaced by the manufacturer, its Authorised Service Centre or similarly qualified persons in order to avoid a hazard.
- Put the cutlery in the cutlery basket with the sharp ends pointing down or put them in the cutlery drawer in a horizontal position with the sharp edges down.

- Do not leave the appliance with the open door unattended to avoid stepping accidentally onto it.
- Before any maintenance operation, deactivate the appliance and disconnect the mains plug from the socket.
- Do not use high pressure water sprays and/or steam to clean the appliance.
- If the appliance has ventilation openings in the base, they must not be covered e.g. by a carpet.
- The appliance is to be connected to the water mains using the new supplied hose-sets. Old hose sets must not be reused.

2. SAFETY INSTRUCTIONS

2.1 Installation

WARNING!
Only a qualified person must install this appliance.

- Remove all the packaging.
- Do not install or use a damaged appliance.
- Do not install or use the appliance where the temperature is less than 0 °C.
- Follow the installation instruction supplied with the appliance.
- Always take care when moving the appliance as it is heavy. Always use safety gloves and enclosed footwear.
- Make sure that the appliance is installed below and adjacent to safe structures.

2.2 Electrical connection

WARNING!
Risk of fire and electrical shock.

- The appliance must be earthed.
- Make sure that the parameters on the rating plate are compatible with the electrical ratings of the mains power supply.
- Always use a correctly installed shockproof socket.
- Do not use multi-plug adapters and extension cables.
- Make sure not to cause damage to the mains plug and to the mains cable. Should the mains cable need to be replaced, this must be carried out by our Authorised Service Centre.
- Connect the mains plug to the mains socket only at the end of the installation. Make sure that there is access to the mains plug after the installation.
- Do not pull the mains cable to disconnect the appliance. Always pull the mains plug.
- This appliance complies with the E.E.C. Directives.
- Only for UK and Ireland. The appliance has a 13 amp mains plug. If it is necessary to change the fuse in the mains plug, use fuse: 13 amp ASTA (BS 1362).

2.3 Water connection

- Do not cause damage to the water hoses.
- Before connection to new pipes, pipes not used for a long time, where repair work has been carried out or new devices fitted (water meters, etc.), let the water flow until it is clean and clear.

- Ensure that there are no visible water leaks during and after the first use of the appliance.
- The water inlet hose has a safety valve and a sheath with an inner mains cable.

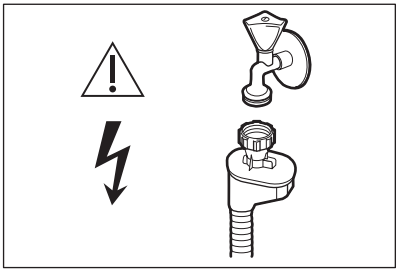

WARNING!
Dangerous voltage.

- If the water inlet hose is damaged, immediately close the water tap and disconnect the mains plug from the mains socket. Contact the Authorised Service Centre to replace the water inlet hose.

2.4 Use

- Do not sit or stand on the open door.
- Dishwasher detergents are dangerous. Obey the safety instructions on the detergent packaging.
- Do not drink and play with the water in the appliance.
- Do not remove the dishes from the appliance until the programme is complete. Some detergent may remain on the dishes.
- The appliance can release hot steam if you open the door while a programme operates.
- Do not put flammable products or items that are wet with flammable products in, near or on the appliance.

2.5 Internal light

WARNING!
Risk of injury.

- This appliance has an internal lamp that comes on when you open the door and goes off when the door is closed.
- The lamp in this appliance is not suitable for household room illumination.
- To replace the lamp, contact the Service.

2.6 Service

- Contact the Authorised Service Centre to repair the appliance. We recommend only the use of original spare parts.
- When you contact the Authorised Service Centre, ensure that you have the following information that is available on the rating plate.
  Model :
  PNC :
  Serial Number :

2.7 Disposal

WARNING!
Risk of injury or suffocation.

- Disconnect the appliance from the mains supply.
- Cut off the mains cable and discard it.
- Remove the door catch to prevent children and pets to get closed in the appliance.

3. PRODUCT DESCRIPTION

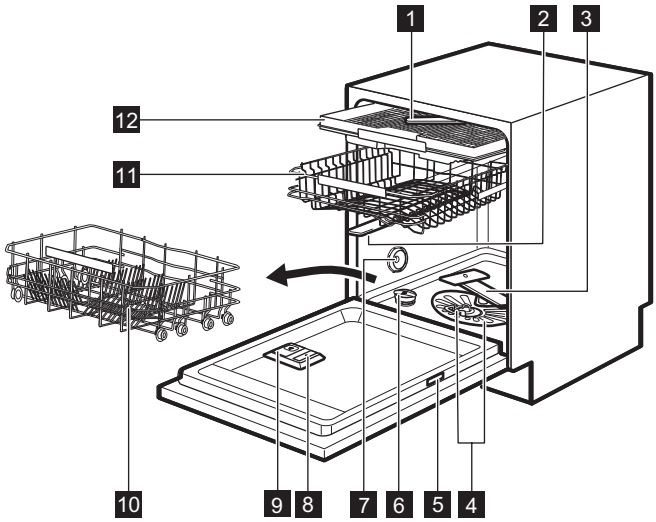

1 Top spray arm
2 Upper spray arm
3 Lower spray arm
4 Filters
5 Rating plate
6 Salt container
7 Air vent
8 Rinse aid dispenser
9 Detergent dispenser
10 Lower basket
11 Upper basket
12 Cutlery drawer

3.1 TimeBeam

The TimeBeam is a display that is shown on the floor below the appliance door.

- When the programme starts, the programme duration comes on.
- When the programme is completed, **0:00** and **CLEAN** come on.
- When the delay start starts, the countdown duration and **DELAY** come on.
- When the appliance has a malfunction, an alarm code appears.

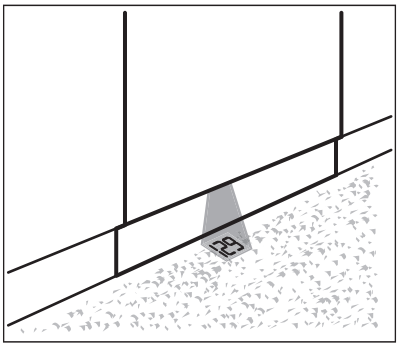

When AirDry is activated during the drying phase, the projection on the floor may not be completely visible. To check the remaining time of the running programme, look at the control panel display.

4. CONTROL PANEL

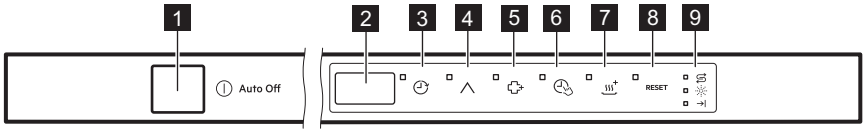

1 On/off button
2 Display
3 **Delay** button
4 **Program** button
5 **ExtraHygiene** button
6 **TimeSaver** button
7 **XtraDry** button
8 **Reset** button
9 Indicators

4.1 Indicators

Indicator	Description
→|	End indicator.
	Rinse aid indicator. It is always off while the programme operates.
	Salt indicator. It is always off while the programme operates.

5. PROGRAMMES

Programme	Degree of soil Type of load	Programme phases	Options
P1 ECO 1)	• Normal soil • Crockery and cutlery	• Prewash • Wash 50 °C • Rinses • Dry	• ExtraHygiene • TimeSaver • XtraDry

Programme	Degree of soil Type of load	Programme phases	Options
P2 AUTO SENSE 2)	• All • Crockery, cutlery, pots and pans	• Prewash • Wash from 45 °C to 70 °C • Rinses • Dry	• ExtraHygiene • XtraDry
P5 PRO ZONE 3)	• Mixed soil • Crockery, cutlery, pots and pans	• Prewash • Wash 50 °C and 65 °C • Rinses • Dry	• TimeSaver • XtraDry
P3	• Heavy soil • Crockery, cutlery, pots and pans	• Prewash • Wash 70 °C • Rinses • Dry	• TimeSaver • XtraDry • ExtraHygiene
P6	• Normal or light soil • Delicate crockery and glassware	• Wash 45 °C • Rinses • Dry	• XtraDry
P4 30 MIN 4)	• Fresh soil • Crockery and cutlery	• Wash 60 °C or 65 °C • Rinses	• ExtraHygiene • XtraDry
P8 5)	• All	• Prewash	
P7 SILENT 6)	• Normal soil • Crockery and cutlery	• Prewash • Wash 50 °C • Rinses • Dry	• XtraDry

1) With this programme, you have the most efficient use of water and energy consumption for crockery and cutlery with normal soil. This is the standard programme for test institutes.

2) The appliance senses the degree of soil and the quantity of items in the baskets . It automatically adjusts the temperature and the quantity of water, the energy consumption and the programme duration.

3) With this programme, you can wash a load with mixed soil. Very heavy soil in the lower basket and normal soil in the upper basket. The pressure and the temperature of the water in the lower basket are higher than in the upper basket.

4) With this programme, you can wash a half-load dishwasher with fresh soil. It gives good washing results in a short time.

5) With this programme, you can quickly rinse dishes to prevent remains of food to bond on dishes and odours to form in the appliance. Do not use detergent with this programme.

6) This is the most silent programme. The pump works at a very low speed to decrease the level of noise. Because of the low speed, the programme duration is long.

5.1 Consumption values

Programme [1]	Water (l)	Energy (kWh)	Duration (min)
P1 ECO	11	0.857	232
P2 AUTO SENSE	7 - 14	0.6 - 1.6	40 - 170
P5 PRO ZONE	14 - 16	1.2 - 1.5	160 - 180
P3	12.5-14.5	1.4-1.7	170-190
P6	12 - 14	0.7 - 0.9	82-92
P4 30 MIN	10	0.9	30
P8	4	0.1	14
P7 SILENT	9 - 10	1.1 - 1.3	230 - 250

[1] The pressure and the temperature of the water, the variations of the mains supply, the options and the quantity of dishes can change the values.

5.2 Information for test institutes

For all the necessary information for test performance, send an email to:

info.test@dishwasher-production.com

Write down the product number (PNC) that is on the rating plate.

6. SETTINGS

6.1 Programme selection mode and user mode

When the appliance is in programme selection mode it is possible to set a programme and to enter the user mode.

Settings available in the user mode:

- The level of water softener according to the water hardness.
- Activation or deactivation of the acoustic signal for the end of a programme.
- Selection of the colour of the TimeBeam.
- Activation or deactivation of the rinse aid empty notification.
- The level of rinse aid according to the required dosage.
- Activation or deactivation of AirDry.

As the appliance stores the saved settings, there is no need to configure it before every cycle.

How to set the programme selection mode

The appliance is in programme selection mode when the display shows the programme number **P1**.

After activation, the appliance is in programme selection mode by default. If not, set the programme selection mode the following way:

Press and hold **Reset** until the appliance is in programme selection mode.

6.2 The water softener

The water softener removes minerals from the water supply, which would have a detrimental effect on the washing results and on the appliance.

The higher the content of these minerals, the harder your water is. Water hardness is measured in equivalent scales.

The water softener should be adjusted according to the hardness of the water in your area. Your local water authority can advise you on the hardness of the water in your area. It is important to set the right level of the water softener to assure good washing results.

Water hardness

German degrees (°dH)	French degrees (°fH)	mmol/l	Clarke degrees	Water softener level
47 - 50	84 - 90	8.4 - 9.0	58 - 63	10
43 - 46	76 - 83	7.6 - 8.3	53 - 57	9
37 - 42	65 - 75	6.5 - 7.5	46 - 52	8
29 - 36	51 - 64	5.1 - 6.4	36 - 45	7
23 - 28	40 - 50	4.0 - 5.0	28 - 35	6
19 - 22	33 - 39	3.3 - 3.9	23 - 27	5 **1)**
15 - 18	26 - 32	2.6 - 3.2	18 - 22	4
11 - 14	19 - 25	1.9 - 2.5	13 - 17	3
4 - 10	7 - 18	0.7 - 1.8	5 - 12	2
<4	<7	<0.7	< 5	1 **2)**

1) Factory setting.

2) Do not use salt at this level.

Whether you use a standard detergent or multi-tabs (with or without salt), set the proper water hardness level to keep the salt refill indicator active.

Multi-tabs containing salt are not effective enough to soften hard water.

How to set the water softener level

The appliance must be in programme selection mode.

1. To enter the user mode, press and hold simultaneously and until the indicators , , , , and **RESET** flash and the display is blank.

2. Press .
   - The indicators , , , and **RESET** are off.
   - The indicator still flashes.
   - The display shows the current setting: e.g. 5 L = level 5.
3. Press repeatedly to change the setting.
4. Press the on/off button to confirm the setting.

6.3 The rinse aid dispenser

The rinse aid helps to dry the dishes without streaks and stains.

The rinse aid is automatically released during the hot rinse phase.

It is possible to set the released quantity of rinse aid between level 1 (minimum quantity) and level 6 (maximum quantity). Level 0 deactivates the rinse aid dispenser and no rinse aid is released.

Factory setting: level 4.

How to set the rinse aid level

The appliance must be in programme selection mode.

1. To enter the user mode, press and hold simultaneously and until the indicators , , , , and **RESET** start flashing and the display is blank.
2. Press .
   - The indicators , , , and **RESET** are off.
   - The indicator continues to flash.
   - The display shows the current setting: e.g. 4A = level 4.
     – The levels of rinse aid range from 0A to 6A where level 0A means rinse aid is not used.
3. Press repeatedly to change the setting.
4. Press on/off to confirm the setting.

6.4 The rinse aid empty notification

The rinse aid helps to dry the dishes without streaks and stains.

The rinse aid is automatically released during the hot rinse phase.

When rinse aid chamber is empty, the rinse aid indicator is turned on notifying to refill rinse aid. If the drying results are satisfactory while using multi-tablets only, it is possible to deactivate the notification for refilling rinse aid. However, for best drying performance, always use rinse aid.

If standard detergent or multi-tablets without rinse aid are used, activate the notification to keep the rinse aid refill indicator active.

How to deactivate the rinse aid empty notification

The appliance must be in programme selection mode.

1. To enter the user mode, press and hold simultaneously and until the indicators , , , , and **RESET** start flashing and the display is blank.
2. Press .
   - The indicators , , , and **RESET** are off.
   - The indicator still flashes.
   - The display shows the current setting: 1 d = the rinse aid empty notification is activated (factory setting).
3. Press to change the setting.

0 d = the rinse aid empty notification is deactivated.

4. Press on/off to confirm the setting.

6.5 Acoustic signals

Acoustic signals sound when a malfunction of the appliance occurs. It is not possible to deactivate these acoustic signals.

There is also an acoustic signal that sounds when the programme is completed. By default this acoustic signal is deactivated but it is possible to activate it.

How to activate the acoustic signal for the end of programme

The appliance must be in programme selection mode.

1. To enter the user mode, press and hold simultaneously ∧ and + until the indicators ⏲, ∧, +, ⏲, ♨+ and **RESET** flash and the display is blank.
2. Press ⏲
   - The indicators ⏲, ∧, +, ♨+ and **RESET** are off.
   - The indicator ⏲ still flashes.
   - The display shows the current setting: 0b = Acoustic signal off.
3. Press ⏲ to change the setting.

1b = Acoustic signal on.

4. Press on/off to confirm the setting.

6.6 How to set the colour of the TimeBeam

It is possible to change the colour of the TimeBeam to match the colour of the kitchen floor. There are several colours available. The TimeBeam can also be deactivated.

The appliance must be in programme selection mode.

1. To enter the user mode, press and hold simultaneously ∧ and + until the indicators ⏲, ∧, +, ⏲, ♨+ and **RESET** flash and the display is blank.
2. Press ♨+.
   - The indicators ⏲, ∧, +, ⏲ and **RESET** are off.
   - The indicator ♨+ still flashes.
   - The display shows a number and letter C. Each number refers to a different colour.
     – 0C = TimeBeam deactivated.
3. Press ♨+ repeatedly to change the colour.
4. Press on/off to confirm the setting.

6.7 AirDry

AirDry improves the drying results with less energy consumption.

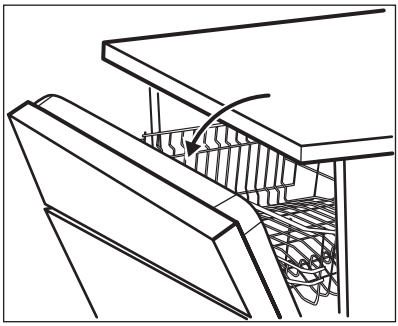

While the drying phase operates, a device opens the appliance door. The door is then kept ajar.

CAUTION!
Do not try to close the appliance door within 2 minutes after automatic open. This can cause damage to the appliance.

CAUTION!
In case of presence of children, the AirDry system can be deactivated if you want to keep the door closed in the end of the cycle.

AirDry is automatically activated with all programmes excluding 🚿

To improve the drying performance refer to the XtraDry option or activate AirDry.

How to deactivate AirDry

The appliance must be in programme selection mode.

1. To enter the user mode, press and hold simultaneously ∧ and ⊕+ until the indicators ⏲, ∧, ⊕+, ⏲, ♨+ and **RESET** start flashing and the display is blank.
2. Press **RESET**.
   - The indicators ⏲, ∧, ⊕+, ⏲ and ♨+ are off.
   - The indicator **RESET** still flashes.
   - The display shows the current setting: 1o = AirDry activated.
3. Press **RESET** to change the setting: 0o = AirDry deactivated.
4. Press on/off to confirm the setting.

7. OPTIONS

ⓘ Desired options must be activated every time before you start a programme.
It is not possible to activate or deactivate options while a programme is running.

ⓘ Not all options are compatible with each other.
If you have selected non compatible options, the appliance will automatically deactivate one or more of them. Only the indicators of the options still active will stay on.

7.1 XtraDry

Activate this option when you want to boost the drying performance. With use of this option, the duration of some programmes, water consumption and the last rinse temperature can be affected.

The XtraDry option is a permanent option for all programmes other than **ECO** and need not to be selected at every cycle.

Every time **ECO** is activated, XtraDry option is off and needs to be chosen manually. In other programmes, the setting of XtraDry is permanent and it is automatically used in next cycles. This configuration can be changed at any time.

Activating XtraDry option deactivates TimeSaver.

How to activate XtraDry

Press ♨+. The related indicator comes on.
If the option is not applicable to the programme, the related indicator does not appear or it flashes quickly for a few seconds and then goes off.
The display shows the updated programme duration.

7.2 TimeSaver

The TimeSaver allows to reduce the time of the selected programme.

The total programme duration decreases by approximately 50%.

The washing results are the same as with the normal programme duration. The drying results can decrease.

This option increases the pressure and the temperature of the water. The washing and the drying phases are shorter.

By default, TimeSaver is off, but it is possible to activate it manually. This option cannot be combined with XtraDry at the same time.

How to activate TimeSaver

Press ⏲, the related indicator comes on.
If the option is not applicable to the programme, the related indicator does not come on or it flashes quickly for a few seconds and then goes off.
The display shows the updated programme duration.

7.3 ExtraHygiene

This option provides better hygiene results by keeping the temperature at 70 °C for at least 10 minutes during the last rinsing phase.

How to activate ExtraHygiene

Press , the related indicator comes on

If the option is not applicable to the programme, the related indicator does not come on or it flashes quickly for a few seconds and then goes out.
The display shows the updated programme duration.

8. BEFORE FIRST USE

1. **Make sure that the current level of the water softener agrees with the hardness of the water supply. If not, adjust the level of the water softener.**
2. Fill the salt container.
3. Fill the rinse aid dispenser.
4. Open the water tap.
5. Start a programme to remove any processing residuals that can still be inside the appliance. Do not use detergent and do not load the baskets.

After starting a programme, it may take up to 5 minutes for the appliance to recharge the resin in the water softener. It seems that the appliance is not working. The washing phase starts only after this procedure is completed. The procedure is repeated periodically.

8.1 The salt container

CAUTION!
Use rough salt designed for dishwashers only. Fine salt increases the risk of corrosion.

The salt is used to recharge the resin in the water softener and to assure good washing results in daily use.

How to fill the salt container

1. Turn the cap of the salt container counterclockwise and remove it.
2. Put 1 litre of water in the salt container (Only for the first time).
3. Fill the salt container with dishwasher salt.

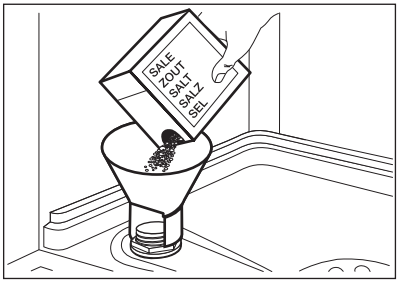

4. Remove the salt around the opening of the salt container.

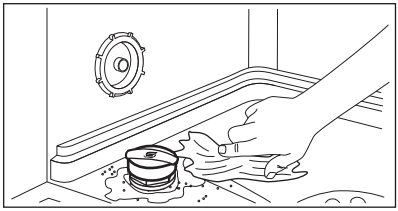

5. Turn the cap of the salt container clockwise to close the salt container.

CAUTION!
Water and salt can come out of the salt container when you fill it. After you fill the salt container, immediately start a programme to prevent corrosion.

8.2 How to fill the rinse aid dispenser

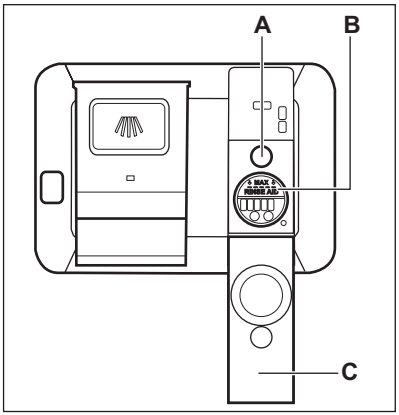

CAUTION!
Only use rinse aid specifically designed for dishwashers.

1. Open the lid (**C**).
2. Fill the dispenser (**B**) until the rinse aid reaches the marking ''MAX''.
3. Remove the spilled rinse aid with an absorbent cloth to prevent too much foam.
4. Close the lid. Make sure that the lid locks into position.

Fill the rinse aid dispenser when the indicator (**A**) becomes clear.

If you use multi-tablets and the drying performance is satisfactory, the rinse aid refill indication can be disabled.
We recommend to always use rinse aid for better drying performance, also in combination with multi-tablets containing rinsing agent.

9. DAILY USE

1. Open the water tap.
2. Press the on/off button to activate the appliance.

Make sure that the appliance is in programme selection mode.

- If the salt indicator is on, fill the salt container.
- If the rinse aid indicator is on, fill the rinse aid dispenser.

3. Load the baskets.
4. Add the detergent.
5. Set and start the correct programme for the type of load and the degree of soil.

9.1 Using the detergent

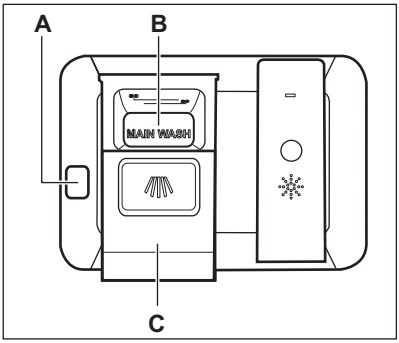

CAUTION!
Only use detergent specifically designed for dishwashers.

1. Press the release button (**A**) to open the lid (**C**).
2. Put the detergent, in powder or tablets, in the compartment (**B**).
3. If the programme has a prewash phase, put a small quantity of

detergent on the inner part of the appliance door.
4. Close the lid. Make sure that the lid locks into position.

9.2 Setting and starting a programme

The Auto Off function

This function decreases energy consumption by deactivating automatically the appliance when it is not operating.

The function comes into operation:
- 5 minutes after the completion of the programme.
- After 5 minutes if the programme has not started.

Starting a programme

1. Keep the appliance door ajar.
2. Press the on/off button to activate the appliance. Make sure that the appliance is in programme selection mode.
3. Press repeatedly ∧ until the display shows the number of the chosen programme. The display shows the programme number for approximately 3 seconds and then shows the programme duration.
4. Set the applicable options.
5. Close the appliance door to start the programme.

Starting a programme with delay start

1. Set a programme.
2. Press ◷ again and again until the display shows the delay time you want to set (from 1 to 24 hours).

The delay indicator comes on.

3. Close the appliance door to start the countdown.

While a countdown is running it is possible to increase the delay time but not to change the selection of the programme and options.
When the countdown is completed, the programme starts.

Opening the door while the appliance operates

If you open the door while a programme is running, the appliance stops. It may affect the energy consumption and the programme duration. When you close the door, the appliance continues from the point of interruption.

If the door is opened for more than 30 seconds during the drying phase, the running programme will end. This will not happen if the door is opened by AirDry.

CAUTION!
Do not try to close the appliance door within 2 minutes after AirDry automatically opens it, as this may cause damage to the appliance. If, afterwards, the door is closed for another 3 minutes, the running programme ends.

Cancelling the delay start while the countdown operates

When you cancel the delay start you have to set the programme and options again.

Press and hold **Reset** until the appliance is in programme selection mode.

Cancelling the programme

Press and hold **Reset** until the appliance is in programme selection mode.
Make sure that there is detergent in the detergent dispenser before you start a new programme.

End of programme

When the programme is completed and you open the door, the appliance is automatically deactivated.

Close the water tap.

10. HINTS AND TIPS

10.1 General

The following hints will ensure optimal cleaning and drying results in daily use and also help to protect the environment.

- Remove larger residues of food from the dishes into the waste bin.
- Do not pre-rinse dishes by hand. When needed, use the prewash programme (if available) or select a programme with a prewash phase.
- Always use the whole space of the baskets.
- When loading the appliance, make sure that the dishes can be completely reached and washed by the water released from the spray arm nozzles. Make sure that items do not touch or cover each other.
- You can use dishwasher detergent, rinse aid and salt separately or you can use the multi-tablets (e.g. ''3in1'', ''4in1'', ''All in 1''). Follow the instructions written on the packaging.
- Select the programme according to the type of load and degree of soil. With the ECO programme you have the most efficient use of water and energy consumption for crockery and cutlery with normal soil.

10.2 Using salt, rinse aid and detergent

- Only use salt, rinse aid and detergent for dishwasher. Other products can cause damage to the appliance.
- In areas with hard and very hard water we recommend to use plain dishwasher detergent (powder, gel, tablets containing no additional agents), rinse aid and salt separately for optimal cleaning and drying results.
- At least once a month run the appliance with the use of appliance cleaner which is particularly suitable for this purpose.
- Detergent tablets do not fully dissolve with short programmes. To prevent detergent residues on the tableware, we recommend that you use the tablets with long programmes.
- Do not use more than the correct quantity of detergent. Refer to the instructions on the detergent packaging.

10.3 What to do if you want to stop using multi-tablets

Before you start to use separately detergent, salt and rinse aid do the following procedure.

1. Set the highest level of the water softener.
2. Make sure that the salt and rinse aid containers are full.
3. Start the shortest programme with a rinsing phase. Do not add detergent and do not load the baskets.
4. When the programme is completed, adjust the water softener according to the water hardness in your area.
5. Adjust the released quantity of rinse aid.
6. Activate the rinse aid empty notification.

10.4 Loading the baskets

- Only use the appliance to wash items that are dishwasher-safe.
- Do not put in the appliance items made of wood, horn, aluminium, pewter and copper.
- Do not put in the appliance items that can absorb water (sponges, household cloths).
- Remove larger residues of food from the dishes into the waste bin.
- Make soft the remaining burned food on the items.
- Put hollow items (cups, glasses and pans) with the opening down.
- Make sure that glasses do not touch other glasses.
- Put cutlery and small items in the cutlery drawer.
- Put light items in the upper basket. Make sure that the items do not move.

- Make sure that the spray arms can move freely before you start a programme.

10.5 Before starting a programme

Make sure that:

- The filters are clean and correctly installed.
- The cap of the salt container is tight.
- The spray arms are not clogged.
- There is dishwasher salt and rinse aid (unless you use multi- tablets).
- The position of the items in the baskets is correct.
- The programme is applicable for the type of load and for the degree of soil.
- The correct quantity of detergent is used.

10.6 Unloading the baskets

1. Let the tableware cool down before you remove it from the appliance. Hot items can be easily damaged.
2. First remove items from the lower basket, then from the upper basket.

At the end of the program water can still remain on the sides and on the door of the appliance.

11. CARE AND CLEANING

WARNING!
Before maintenance, deactivate the appliance and disconnect the mains plug from the main socket.

Dirty filters and clogged spray arms decrease the washing results. Make a check regularly and, if necessary, clean them.

11.1 Cleaning the filters

The filter system is made of 3 parts.

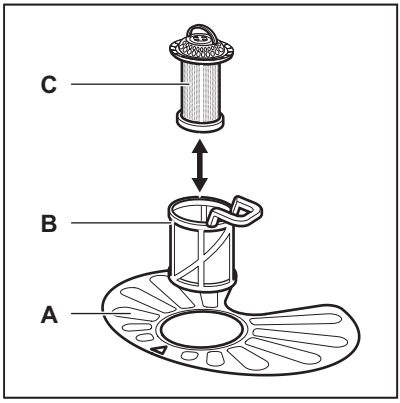

1. Turn the filter (**B**) counterclockwise and remove it.

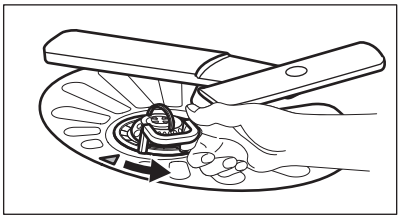

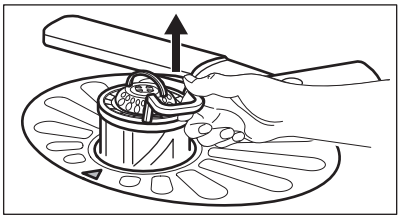

2. Remove the filter (**C**) out of filter (**B**).
3. Remove the flat filter (**A**).

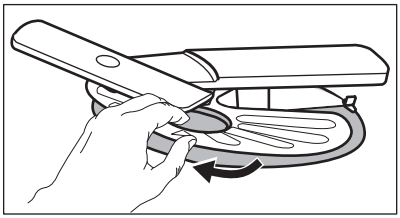

4. Wash the filters.

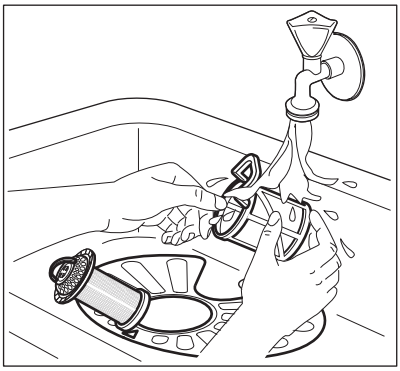

5. Make sure that there are no residues of food or soil in or around the edge of the sump.
6. Put back in place the flat filter (**A**). Make sure that it is correctly positioned under the 2 guides.

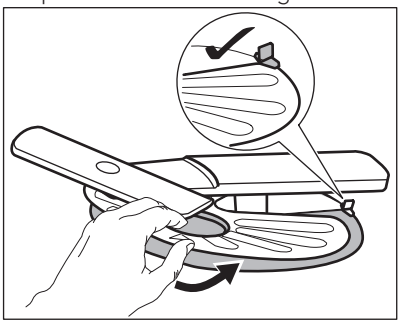

7. Reassemble the filters (**B**) and (**C**).
8. Put back the filter (**B**) in the flat filter (**A**). Turn it clockwise until it locks.

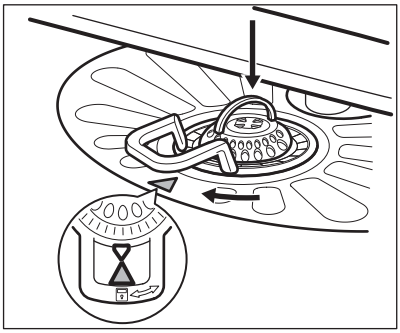

CAUTION!
An incorrect position of the filters can cause bad washing results and damage to the appliance.

11.2 Cleaning the upper spray arm

We recommend to clean regularly the upper spray arm to avoid soil to clog the holes.

Clogged holes can cause unsatisfactory washing results.

1. Pull out the upper basket.
2. To disengage the spray arm from the basket, press the spray arm upwards in the direction indicated by the lower arrow and simultaneously turn it clockwise.

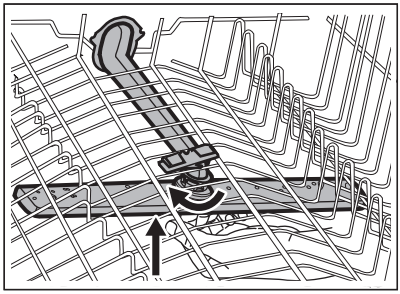

3. Wash the spray arm under running water. Use a thin pointed tool, e.g. toothpick, to remove particles of soil from the holes.

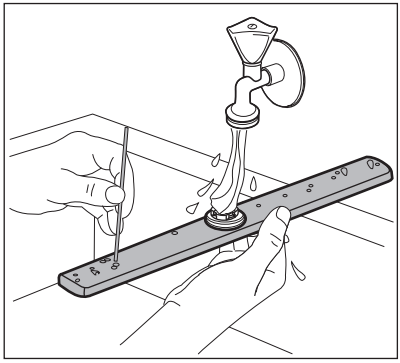

4. To engage again the spray arm to the basket, press the spray arm upwards in the direction indicated by the lower arrow and simultaneously turn it counterclockwise until it locks into place.

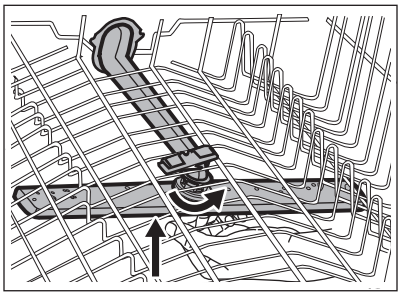

11.3 External cleaning

- Clean the appliance with a moist soft cloth.
- Only use neutral detergents.
- Do not use abrasive products, abrasive cleaning pads or solvents.

11.4 Internal cleaning

- Carefully clean the appliance, including the rubber gasket of the door, with a soft damp cloth.
- If you use short duration programmes regularly, these can leave deposits of grease and limescale inside the appliance. To prevent this, we recommend running long duration programmes at least twice a month.
- To maintain the performance of your appliance at its best, we recommend using a specific cleaning product for dishwashers (at least once a month). Follow carefully the instructions on the packaging of the product.

12. TROUBLESHOOTING

If the appliance does not start or it stops during operation, first check if you can solve the problem by yourself with the help of the information in the table or contact an Authorised Service Centre.

WARNING!
Repairs not properly done may result in serious risk to the safety of the user. Any repairs must be performed by qualified personnel.

With some problems, the display shows an alarm code.

The majority of problems that can occur can be solved without the need to contact an Authorised Service Centre.

Problem and alarm code	Possible cause and solution
You cannot activate the appliance.	• Make sure that the mains plug is connected to the mains socket. • Make sure that there is no damaged fuse in the fuse box.
The program does not start.	• Make sure that the appliance door is closed. • If the delay start is set, cancel the setting or wait for the end of the countdown. • The appliance has started the procedure to recharge the resin inside the water softener. The duration of the procedure is approximately 5 minutes.

Problem and alarm code	Possible cause and solution
The appliance does not fill with water. The display shows i10.	• Make sure that the water tap is open. • Make sure that the pressure of the water supply is not too low. For this information, contact your local water authority. • Make sure that the water tap is not clogged. • Make sure that the filter in the inlet hose is not clogged. • Make sure that the inlet hose has no kinks or bends.
The appliance does not drain the water. The display shows i20.	• Make sure that the sink spigot is not clogged. • Make sure that the filter in the outlet hose is not clogged. • Make sure that the interior filter system is not clogged. • Make sure that the drain hose has no kinks or bends.
The anti-flood device is on. The display shows i30.	• Close the water tap and contact an Authorised Service Centre.
The appliance stops and starts more times during operation.	• It is normal. It provides optimal cleaning results and energy savings.
The program lasts too long.	• Select the TimeSaver option to shorten the program time. • If the delayed start option is set, cancel the delay setting or wait for the end of the countdown.
The remaining time in the display increases and skips nearly to the end of program time.	• This is not a defect. The appliance is working correctly.
Small leak from the appliance door.	• The appliance is not levelled. Loosen or tighten the adjustable feet (if applicable). • The appliance door is not centred on the tub. Adjust the rear foot (if applicable).
The appliance door is difficult to close.	• The appliance is not levelled. Loosen or tighten the adjustable feet (if applicable). • Parts of the tableware are protruding from the baskets.
Rattling/knocking sounds from inside the appliance.	• The tableware is not properly arranged in the baskets. Refer to basket loading leaflet. • Make sure that the spray arms can rotate freely.
The appliance trips the circuit-beaker.	• The amperage is insufficient to supply simultaneously all the appliances in use. Check the socket amperage and the capacity of the meter or turn off one of the appliances in use. • Internal electrical fault of the appliance. Contact an Authorised Service Centre.

Refer to **"Before first use"**, **"Daily use"**, or **"Hints and tips"** for other possible causes.

Once you have checked the appliance, deactivate and activate the appliance. If the problem occurs again, contact an Authorised Service Centre.

For alarm codes not described in the table, contact an Authorised Service Centre.

12.1 The washing and drying results are not satisfactory

Problem	Possible cause and solution
Poor washing results.	• Refer to **"Daily use"**, **"Hints and tips"** and basket loading leaflet. • Use more intensive washing programmes. • Clean spray arm jets and filter. Refer to **"Care and Cleaning"**.
Poor drying results.	• Tableware has been left for too long inside a closed appliance. • There is no rinse aid or the dosage of rinse aid is not enough. Set the rinse aid dispenser to a higher level. • Plastic items may need to be towel dried. • For the best drying performance activate the option XtraDry and set AirDry. • We recommend to always use rinse aid, even in combination with multi-tablets.
There are whitish streaks or bluish layers on glasses and dishes.	• The release quantity of rinse aid is too much. Adjust the rinse aid level to a lower level. • The quantity of detergent is too much.
There are stains and dry water drops on glasses and dishes.	• The released quantity of rinse aid is not sufficient. Adjust the rinse aid level to a higher level. • The quality of the rinse aid can be the cause.
The dishes are wet.	• For the best drying performance activate the option XtraDry and set AirDry . • The programme does not have a drying phase or has a drying phase with low temperature. • The rinse aid dispenser is empty. • The quality of the rinse aid can be the cause. • The quality of the multi-tablets can be the cause. Try a different brand or activate the rinse aid dispenser and use rinse aid and multi-tablets together.
The interior of the appliance is wet.	• This is not a defect of the appliance. it is caused by the humidity in the air that condenses on the walls.
Unusual foam during washing.	• Use the detergent for dishwashers only. • There is a leak in the rinse aid dispenser. Contact an Authorised Service Centre.

Problem	Possible cause and solution
Traces of rust on cutlery.	• There is too much salt in the water used for washing. Refer to **"The water softener"**. • Silver and stainless steel cutlery were placed together. Avoid to put silver and stainless steel items close together.
There are residues of detergent in the dispenser at the end of the programme.	• The detergent tablet got stuck in the dispenser and therefore was not completely washed away by water. • Water cannot wash away the detergent from the dispenser. Make sure that the spray arm is not blocked or clogged. • Make sure that items in the baskets do not impede the lid of the detergent dispenser from opening.
Odours inside the appliance.	• Refer to **"Internal cleaning"**.
Limescale deposits on the tableware, on the tub and on the inside of the door.	• The level of salt is low, check the refill indicator. • The cap of the salt container is loose. • Your tap water is hard. Refer to **"The water softener"**. • Even using multi-functional tabs use salt and set regeneration of the water softener. Refer to **"The water softener"**. • If lime scale deposits still remain, clean the appliance with appliance cleaners which are particularly suitable for this purpose. • Try different detergent. • Contact the detergent manufacturer.
Dull, discoloured or chipped tableware.	• Make sure that only dishwasher-safe items are washed in the appliance. • Load and unload the basket carefully. Refer to basket loading leaflet. • Place delicate items in the upper basket.

Refer to **"Before first use"**, **"Daily use"** or **"Hints and tips"** for other possible causes.

13. TECHNICAL INFORMATION

Dimensions	Width / height / depth (mm)	596 / 818 - 898 / 550
Electrical connection [1)]	Voltage (V)	200 - 240
	Frequency (Hz)	50 / 60
Water supply pressure	bar (minimum and maximum)	0.5 - 8
	MPa (minimum and maximum)	0.05 - 0.8

Water supply	Cold water or hot water 2)	max 60 °C
Capacity	Place settings	15
Power consumption	Left-on mode (W)	5.0
Power consumption	Off-mode (W)	0.10

1) Refer to the rating plate for other values.

2) If the hot water comes from alternative source of energy, (e.g. solar panels, aeolian energy), use the hot water supply to decrease energy consumption.

14. ENVIRONMENTAL CONCERNS

Recycle the materials with the symbol ♺. Put the packaging in applicable containers to recycle it. Help protect the environment and human health and to recycle waste of electrical and electronic appliances. Do not dispose appliances marked with the symbol with the household waste. Return the product to your local recycling facility or contact your municipal office.

www.aeg.com/shop



117883340-A-112017

CE

AEG