P330
User Guide



Machine Types (2nd Gen): 30D1, 30D2, and 30D4

Note: Before using this information and the product it supports, be sure to read and understand the “Read this first: Important safety information” on page iii and Appendix G “Notices” on page 113.

Fourth Edition (March 2020)

© Copyright Lenovo 2020.

LIMITED AND RESTRICTED RIGHTS NOTICE: If data or software is delivered pursuant to a General Services Administration “GSA” contract, use, reproduction, or disclosure is subject to restrictions set forth in Contract No. GS-35F-05925.

Contents

Read this first: Important safety information iii
Before using this manual iii
Service and upgrades iii
Power cords and power adapters iv
Power cord notice iv
Extension cords and related devices. v
Plugs and outlets vi
Power supply statement vi
External devices vi
Lithium coin-cell battery notice vii
Heat and product ventilation vii
Electrical current safety information viii
Laser safety information ix
Liquid crystal display (LCD) notice x
Use earphones, headphones, or a headset x
Choking hazard notice xi
Plastic bag notice xi
Glass parts notice xi
Computer placement notices xi
Hazardous energy statement xii
Eye comfort xii
Tip-over hazard prevention notice. xii
Remote control xiii
Static electricity prevention xiii
Operating environment xiii
Cleaning and maintenance xiv

Chapter 1. Product overview 1
Hardware locations 1
Front view 1
Rear view 3
Computer components 5
Parts on the system board 6
Internal storage drives 8
Machine type and model label 9
Computer features. 10
Statement on USB transfer rate 13
Computer specifications 13
Programs 14
Accessing a program on your computer . . . 14
An introduction to Lenovo programs 14

Chapter 2. Using your computer . . . 15
Registering your computer 15
Get started with Windows 10 15
Windows account 15
Windows user interface 16
Setting the computer volume 17
Using a disc 17
Guidelines about using the optical drive . . . 17
Handling and storing a disc 17
Playing and removing a disc 18
Recording a disc 18
Connecting to a network 19

Chapter 3. You and your computer . . 21
Arranging your workspace 21
Glare and lighting 21
Air circulation 21
Electrical outlet locations and cable lengths . . 21
Comfort 21
Keeping your computer current. 22
Accessibility information 23

Chapter 4. Security 27
Locking your computer 27
Enabling or disabling the E-lock. 27
Locking the computer cover 27
Attaching a Kensington-style cable lock . . . 29
Attaching a cable lock 29
Viewing and changing security settings in the Setup Utility program 30
Using passwords and Windows accounts 30
Using the cover presence switch 31
Using firewalls 31
Protecting data against viruses 31
Using the Smart USB Protection function 32
Computrace Agent software embedded in firmware (for selected models) 32
Trusted Platform Module (TPM). 32

Chapter 5. Advanced configuration 33
Using the Setup Utility program 33
Starting the Setup Utility program 33
Changing the display language of the Setup Utility program 33
Enabling or disabling a device 33
Enabling or disabling the automatic power-on of your computer 34
Enabling or disabling the ErP LPS compliance mode 34
Switching between better acoustic and better thermal performance 34
Enabling or disabling the system to record thermal alert logs 35

© Copyright Lenovo 2020

Enabling or disabling the configuration change detection . . . 35
Changing the BIOS settings before installing a new operating system . . . 35
Using BIOS passwords . . . 36
Selecting a startup device . . . 37
Exiting the Setup Utility program . . . 38
Updating and recovering the BIOS . . . 38
Configuring RAID . . . 39
An Introduction to RAID . . . 39
RAID Level . . . 40
Configuring the system BIOS to enable SATA RAID functionality . . . 40
Configuring RAID in UEFI mode . . . 40
Configuring RAID in legacy mode . . . 41

Chapter 6. Troubleshooting, diagnostics, and recovery . . . 43
Basic procedure for resolving computer problems . . . 43
Troubleshooting . . . 43
Startup problems . . . 44
Audio problems . . . 45
Network problems . . . 46
Performance problems . . . 48
Storage drive problems . . . 49
CD or DVD problems . . . 49
Serial connector problems . . . 50
USB device problems . . . 50
Software problems . . . 51
Diagnosing problems . . . 51
Recovery information . . . 51

Chapter 7. Hardware removal and installation . . . 53
Customer Replaceable Units . . . 53
Handling static-sensitive devices . . . 54
Preparing your computer . . . 54
Removing and installing hardware . . . 56
External options . . . 56
PCIe card . . . 56
M.2 solid-state drive . . . 58
Memory module . . . 65
Slim optical drive . . . 67
Coin-cell battery . . . 70
Cover presence switch . . . 71
Power supply assembly . . . 73
Storage drive in the storage drive bay . . . 75
Storage drive cage . . . 84
E-lock . . . 88
Completing the parts replacement . . . 89

Chapter 8. Getting information, help, and service . . . 93
Information resources . . . 93
Accessing the user guide in various languages . . . 93
Windows help system . . . 93
Safety and warranty . . . 93
Lenovo Web site . . . 93
Lenovo Support Web site . . . 93
Help and service . . . 94
Calling for service . . . 94
Using other services . . . 94
Purchasing additional services . . . 95

Appendix A. System memory speed . . . 97

Appendix B. Supplemental information about the Ubuntu operating system . . . 99

Appendix C. Regulatory and TCO Certified information of countries and regions . . . 101

Appendix D. WEEE and recycling information of countries and regions . . . 105

Appendix E. Restriction of Hazardous Substances (RoHS) Directive of countries and regions . . . 109

Appendix F. ENERGY STAR model information . . . 111

Appendix G. Notices . . . 113

Appendix H. Trademarks . . . 115

Read this first: Important safety information

This chapter contains the safety information that you must be familiar with.

Before using this manual

CAUTION:
Before using this manual, be sure to read and understand all the related safety information for this product. Refer to the information in this section and the safety information in the *Safety and Warranty Guide* **that you received with this product. Reading and understanding this safety information reduces the risk of personal injury and damage to your product.**

If you no longer have a copy of the *Safety and Warranty Guide*, you can obtain a Portable Document Format (PDF) version from the Lenovo Support Web site at https://support.lenovo.com. The Lenovo Support Web site also provides the *Safety and Warranty Guide* and this *User Guide* in additional languages.

Service and upgrades

Do not attempt to service a product yourself unless instructed to do so by the Customer Support Center or your documentation. Only use a Service Provider who is approved to repair your particular product.

Note: Some computer parts can be upgraded or replaced by the customer. Upgrades typically are referred to as options. Replacement parts approved for customer installation are referred to as Customer Replaceable Units, or CRUs. Lenovo provides documentation with instructions when it is appropriate for customers to install options or replace CRUs. You must closely follow all instructions when installing or replacing parts. The Off state of a power indicator does not necessarily mean that voltage levels inside a product are zero. Before you remove the covers from a product equipped with a power cord, always ensure that the power is turned off and that the product is unplugged from any power source. If you have any questions or concerns, contact the Customer Support Center.

Although there are no moving parts in the computer after the power cord has been disconnected, the following warnings are required for your safety.



Moving Parts:

Keep fingers and other parts of your body away from hazardous, moving parts. If you suffer an injury, seek medical care immediately.



Hot Surface:

Avoid contact with hot components inside the computer. During operation, some components become hot enough to burn the skin. Before you open the computer cover, turn off the computer, disconnect power, and wait approximately 10 minutes for the components to cool.



© Copyright Lenovo 2020

After replacing a CRU, reinstall all protective covers, including the computer cover, before connecting power and operating the computer. This action is important to help prevent unexpected electrical shock and help ensure the containment of an unexpected fire that could happen under extremely rare conditions.



Sharp Edges:

When replacing CRUs, be cautious of sharp edges or corners that might cause injury. If you suffer an injury, seek medical care immediately.

Power cords and power adapters

Use only the power cords and power adapters supplied by the product manufacturer. Do not use the ac power cord for other devices.

The power cords shall be safety approved. For Germany, it shall be H05VV-F, 3G, 0.75 mm^2, or better. For other countries, the suitable types shall be used accordingly.

Never wrap a power cord around a power adapter or other object. Doing so can stress the cord in ways that can cause the cord to fray, crack, or crimp. This can present a safety hazard.

Always route power cords so that they will not be walked on, tripped over, or pinched by objects.

Protect power cord and power adapters from liquids. For instance, do not leave your power cord or power adapter near sinks, tubs, toilets, or on floors that are cleaned with liquid cleansers. Liquids can cause a short circuit, particularly if the power cord or power adapter has been stressed by misuse. Liquids also can cause gradual corrosion of power cord terminals and/or the connector terminals on a power adapter, which can eventually result in overheating.

Ensure that all power cord connectors are securely and completely plugged into receptacles.

Do not use any power adapter that shows corrosion at the ac input pins or shows signs of overheating (such as deformed plastic) at the ac input or anywhere on the power adapter.

Do not use any power cords where the electrical contacts on either end show signs of corrosion or overheating or where the power cord appears to have been damaged in any way.

Power cord notice

Note: The power cord and adapter provided with this product are intended to be used with this product only. Do not use them with any other products.

For your safety, Lenovo provides a power cord with a grounded attachment plug to use with this product. To avoid electrical shock, always use the power cord and plug with a properly grounded outlet.

Power cords provided by Lenovo in the United States and Canada are listed by Underwriter's Laboratories (UL) and certified by the Canadian Standards Association (CSA).

For units intended to be operated at 115 volts: Use a UL-listed and CSA-certified cord set consisting of a minimum 18 AWG, Type SVT or SJT, three-conductor cord, a maximum of 15 feet in length and a parallel blade, grounding-type attachment plug rated 10 amperes, 125 volts.

For units intended to be operated at 230 volts (U.S. use): Use a UL-listed and CSA-certified cord set consisting of a minimum 18 AWG, Type SVT or SJT, three-conductor cord, a maximum of 15 feet in length and a tandem blade, grounding-type attachment plug rated 10 amperes, 250 volts.

For units intended to be operated at 230 volts (outside the U.S.): Use a cord set with a grounding-type attachment plug. The cord set should have the appropriate safety approvals for the country in which the equipment will be installed.

Power cords provided by Lenovo for a specific country or region are usually available only in that country or region.

For units intended to be operated in Germany: The power cords must be safety approved. For Germany, it must be H05VV-F, 3G, 0.75 mm2, or better. For other countries, the suitable types must be used accordingly.

For units intended to be operated in Denmark: Use a cord set with a grounding-type attachment plug. The cord set should have the appropriate safety approvals for the country in which the equipment will be installed.

For units intended to be operated in Norway, Sweden, Finland: Use a cord set with a two-prong attachment plug. The cord set should have the appropriate safety approvals for the country in which the equipment will be installed.

If you intend to use your PC in a country or region that is different from your ordering location, please purchase an additional Lenovo power cord for the country or region where the PC will be used. Refer to the power cord guide provided in our Web site, https://support.lenovo.com, for details. Some countries and regions support multiple voltages, so make sure you order the appropriate power cord for the intended voltage.

Extension cords and related devices

Ensure that extension cords, surge protectors, uninterruptible power supplies, and power strips that you use are rated to handle the electrical requirements of the product. Never overload these devices. If power strips are used, the load should not exceed the power strip input rating. Consult an electrician for more information if you have questions about power loads, power requirements, and input ratings.

© Copyright Lenovo 2020

Plugs and outlets

DANGER

If a receptacle (power outlet) that you intend to use with your computer equipment appears to be damaged or corroded, do not use the outlet until it is replaced by a qualified electrician.

Do not bend or modify the plug. If the plug is damaged, contact the manufacturer to obtain a replacement.

Do not share an electrical outlet with other home or commercial appliances that draw large amounts of electricity; otherwise, unstable voltage might damage your computer, data, or attached devices.

Some products are equipped with a three-pronged plug. This plug fits only into a grounded electrical outlet. This is a safety feature. Do not defeat this safety feature by trying to insert it into a non-grounded outlet. If you cannot insert the plug into the outlet, contact an electrician for an approved outlet adapter or to replace the outlet with one that enables this safety feature. Never overload an electrical outlet. The overall system load should not exceed 80 percent of the branch circuit rating. Consult an electrician for more information if you have questions about power loads and branch circuit ratings.

Be sure that the power outlet you are using is properly wired, easily accessible, and located close to the equipment. Do not fully extend power cords in a way that will stress the cords.

Be sure that the power outlet provides the correct voltage and current for the product you are installing.

Carefully connect and disconnect the equipment from the electrical outlet.

Power supply statement

Never remove the cover on a power supply or any part that has the following label attached.



Hazardous voltage, current, and energy levels are present inside any component that has this label attached. There are no serviceable parts inside these components. If you suspect a problem with one of these parts, contact a service technician.

External devices

CAUTION:
Do not connect or disconnect any external device cables other than Universal Serial Bus (USB) and 1394 cables while the computer power is on; otherwise, you might damage your computer. To avoid possible damage to attached devices, wait at least five seconds after the computer is shut down to disconnect external devices.

Lithium coin-cell battery notice

DANGER

Danger of explosion if battery is incorrectly replaced.

If the coin-cell battery is not a CRU, do not attempt to replace the coin-cell battery. Replacement of the battery must be done by a Lenovo-authorized repair facility or technician.

The Lenovo-authorized repair facilities or technicians recycle Lenovo batteries according to local laws and regulations.



When replacing the lithium coin-cell battery, use only the same type or equivalent type that is recommended by the manufacturer. The battery contains lithium and can explode if not properly used, handled, or disposed of. Swallowing the lithium coin-cell battery will cause chocking or severe internal burns in just two hours and might even result in death.

Keep batteries away from children. If the lithium coin-cell battery is swallowed or placed inside any part of the body, seek medical care immediately.

Do not:

- Throw or immerse into water
- Heat to more than 100 °C (212°F)
- Repair or disassemble
- Leave in an extremely low air pressure environment
- Leave in an extremely high-temperature environment
- Crush, puncture, cut, or incinerate

Dispose of the battery as required by local ordinances or regulations.

The following statement applies to users in the state of California, U.S.A.

California Perchlorate Information:

Products containing manganese dioxide lithium coin-cell batteries may contain perchlorate.

Perchlorate Material - special handling may apply, see https://www.dtsc.ca.gov/hazardouswaste/perchlorate/.

Heat and product ventilation



Computers, power adapters, and many accessories can generate heat when turned on and when batteries are charging. Always follow these basic precautions:

- Do not leave your computer, power adapter, or accessories in contact with your lap or any part of your body for an extended period when the products are functioning or when the battery is charging. Your

© Copyright Lenovo 2020

computer, power adapter, and many accessories produce some heat during normal operation. Extended contact with the body could cause discomfort or, potentially, a skin burn.

- Do not charge the battery or operate your computer, power adapter, or accessories near flammable materials or in explosive environments.
- Ventilation slots, fans, and heat sinks are provided with the product for safety, comfort, and reliable operation. These features might inadvertently become blocked by placing the product on a bed, sofa, carpet, or other flexible surface. Never block, cover, or disable these features.

Inspect your desktop computer for dust accumulation at least once every three months. Before inspecting your computer, turn off the power and unplug the computer's power cord from the electrical outlet; then remove any dust from vents and perforations in the bezel. If you notice external dust accumulation, then examine and remove dust from the inside of the computer including heat sink inlet fins, power supply vents, and fans. Always turn off and unplug the computer before opening the cover. If possible, avoid operating your computer within two feet of high-traffic areas. If you must operate your computer in or near a high-traffic area, inspect and, if necessary, clean your computer more frequently.

For your safety and to maintain optimum computer performance, always follow these basic precautions with your desktop computer:

- Keep the cover closed whenever the computer is plugged in.
- Regularly inspect the outside of the computer for dust accumulation.
- Remove dust from vents and any perforations in the bezel. More frequent cleanings might be required for computers in dusty or high-traffic areas.
- Do not restrict or block any ventilation openings.
- Do not store or operate your computer inside furniture, as this might increase the risk of overheating.
- Airflow temperatures into the computer should not exceed 35°C (95°F).
- Do not install air filtration devices. They may interfere with proper cooling.

Electrical current safety information



DANGER

Electric current from power, telephone, and communication cables is hazardous.

To avoid a shock hazard:

- **Do not use your computer during a lightning storm.**
- **Do not connect or disconnect any cables or perform installation, maintenance, or reconfiguration of this product during an electrical storm.**
- **Connect all power cords to a properly wired and grounded electrical outlet.**
- **Connect properly wired outlets to any equipment that will be attached to this product.**
- **Whenever possible, use one hand only to connect or disconnect signal cables.**
- **Never turn on any equipment when there is evidence of fire, water, or structural damage.**
- **Disconnect the attached power cords, battery, and all the cables before you open the device covers, unless instructed otherwise in the installation and configuration procedures.**
- **Do not use your computer until all internal parts enclosures are fastened into place. Never use the computer when internal parts and circuits are exposed.**

DANGER

Connect and disconnect cables as described in the following procedures when installing, moving, or opening covers on this product or attached devices.

To connect:

1. **Turn everything OFF.**
2. **First, attach all cables to devices.**
3. **Attach signal cables to connectors.**
4. **Attach power cords to outlets.**
5. **Turn devices ON.**

To disconnect:

1. **Turn everything OFF.**
2. **First, remove power cords from outlets.**
3. **Remove signal cables from connectors.**
4. **Remove all cables from devices.**

The power cord must be disconnected from the wall outlet or receptacle before installing all other electrical cables connected to the computer.

The power cord may be reconnected to the wall outlet or receptacle only after all other electrical cables have been connected to the computer.

DANGER

During electrical storms, do not perform any replacement and do not connect the telephone cable to or disconnect it from the telephone outlet on the wall.

Laser safety information

CAUTION:
When laser products (such as CD-ROMs, DVD drives, fiber optic devices, or transmitters) are installed, note the following:

- **Do not remove the covers. Removing the covers of the laser product could result in exposure to hazardous laser radiation. There are no serviceable parts inside the device.**
- **Use of controls or adjustments or performance of procedures other than those specified herein might result in hazardous radiation exposure.**

DANGER

Some laser products contain an embedded Class 3B laser diode. Note the following:
Laser radiation when open. Do not stare into the beam, do not view directly with optical instruments, and avoid direct exposure to the beam.

© Copyright Lenovo 2020

Liquid crystal display (LCD) notice

DANGER

To avoid shock hazards:

- **Do not remove the covers.**
- **Do not operate this product unless the stand is attached.**
- **Do not connect or disconnect this product during an electrical storm.**
- **The power cord plug must be connected to a properly wired and grounded power outlet.**
- **Any equipment to which this product will be attached must also be connected to properly wired and grounded power outlets.**
- **To isolate the monitor from the electrical supply, you must remove the plug from the power outlet. The power outlet should be easily accessible.**

Handling:

- If your monitor weighs more than 18 kg (39.68 lb), we recommend that it be moved or lifted by two people.

Product disposal (TFT monitors):

- The fluorescent lamp in the liquid crystal display contains mercury; dispose according to local, state, or federal laws.

Battery warnings:

- Risk of explosion if battery is replaced by an incorrect type.
- Dispose of used batteries according to the instructions.

Use earphones, headphones, or a headset

- If your computer has both a headphone connector and an audio line-out connector, always use the headphone connector for earphones, headphones, or a headset. However, the headphone connector does not support the microphone of the headset.
- If your computer has both a headset connector and an audio line-out connector, always use the headset connector for earphones, headphones, or a headset.



Excessive sound pressure from earphones and headphones can cause hearing loss. Adjustment of the equalizer to maximum increases the earphone and headphone output voltage and the sound pressure level. Therefore, to protect your hearing, adjust the equalizer to an appropriate level.

Excessive use of headphones or earphones for a long period of time at high volume can be dangerous if the output of the headphone or earphone connectors do not comply with specifications of EN 50332-2. The headphone output connector of your computer complies with EN 50332-2 Sub clause 7. This specification limits the computer's maximum wide band true RMS output voltage to 150 mV. To help protect against hearing loss, ensure that the headphones or earphones you use also comply with EN 50332-2 (Clause 7

Limits) or a wide band characteristic voltage of 75 mV. Using headphones that do not comply with EN 50332-2 can be dangerous due to excessive sound pressure levels.

If your Lenovo computer came with headphones or earphones in the package, as a set, the combination of the headphones or earphones and the computer already complies with the specifications of EN 50332-1. If different headphones or earphones are used, ensure that they comply with EN 50332-1 (Clause 6.5 Limitation Values). Using headphones that do not comply with EN 50332-1 can be dangerous due to excessive sound pressure levels.

Choking hazard notice



CHOKING HAZARD – Product contains small parts.

Keep away from children under three years.

Plastic bag notice

DANGER

Plastic bags can be dangerous. Keep plastic bags away from babies and children to avoid danger of suffocation.

Glass parts notice

CAUTION:
Some parts of your product may be made of glass. This glass could break if the product is dropped on a hard surface or receives a substantial impact. If glass breaks, do not touch or attempt to remove it. Stop using your product until the glass is replaced by trained service personnel.

Computer placement notices

Inappropriate computer placement might cause harm to children.

- Place the computer on a sturdy piece of low-rise furniture or furniture that has been anchored.
- Do not place the computer at the edge of the furniture.
- Keep the computer cables out of the reach of children.
- Some items, such as toys, might attract children. Keep such items away from the computer.

Supervise children in rooms where the above safety instructions cannot be fully implemented.

© Copyright Lenovo 2020

Hazardous energy statement

DANGER

Disconnect all power cords from electrical outlets before removing the computer cover or any part that has the above label attached.

DO NOT disassemble components that have the above label attached. There are no serviceable parts inside these components.

Your product is designed for safe use. However, hazardous voltage, current, and energy levels are present inside any component that has this label attached. Disassembling of these components might cause fire or might even result in death. If you suspect a problem with one of these parts, contact a service technician.

CAUTION:



Bright Light, possible skin or eye damage. Disconnect power before servicing.

CAUTION:



Infrared Light, possible skin or eye damage. Disconnect power before servicing.

Eye comfort

The property of the display in combination with following notes result in reduced eye fatigue and increased comfort.

For tips on how to minimize visual fatigue, please go to https://www.lenovo.com/us/en/safecomp/ to visit “Minimizing Visual Fatigue”.

Tip-over hazard prevention notice

The computer may cause harm to children if it is not located in an appropriate place. Follow the tips below to protect children from harm caused by the computer tipping over:

- Place the computers or monitors on sturdy furniture with a low base or furniture that has been anchored. Push the computers or monitors as far from the edge of the furniture as possible..
- Keep remote controls, toys, and other items that might attract children away from the computers or monitors
- Keep the computer or monitor cables out the reach of the children.
- Supervise children in rooms where these safety tips have not been followed.

CAUTION:
Some parts of your product may be made of glass. This glass could break if the product is dropped on a hard surface or receives a substantial impact. If glass breaks, do not touch it or attempt to remove it. Stop using your product until the glass is replaced by trained service personnel.

Remote control

CAUTION:
Do not use rechargeable batteries in this device.

Static electricity prevention

Static electricity, although harmless to you, can seriously damage computer components and options. Improper handling of static-sensitive parts can damage the part. When you unpack an option or CRU, do not open the static-protective package containing the part until the instructions direct you to install it.

When you handle options or CRUs, or perform any work inside the computer, take the following precautions to avoid static-electricity damage:

- Limit your movement. Movement can cause static electricity to build up around you.
- Always handle components carefully. Handle adapters, memory modules, and other circuit boards by the edges. Never touch exposed circuitry.
- Prevent others from touching components.
- When you install a static-sensitive option or CRU, touch the static-protective package containing the part to a metal expansion-slot cover or other unpainted metal surface on the computer for at least two seconds. This reduces static electricity in the package and your body.
- When possible, remove the static-sensitive part from the static-protective packaging and install the part without setting it down. When this is not possible, place the static-protective packaging on a smooth, level surface and place the part on it.
- Do not place the part on the computer cover or other metal surface.

Operating environment

Maximum altitude (without pressurization)

- Operating: From -15.2 m (-50 ft) to 3048 m (10 000 ft)
- Storage: From -15.2 m (-50 ft) to 10 668 m (35 000 ft)

Temperature

- Operating: From 10°C (50°F) to 35°C (95°F)
- Storage in original shipping package: From -40°C (-40°F) to 60°C (140°F)
- Storage without package: From -10°C (14°F) to 60°C (140°F)

Note: If your computer is stored or transported in temperatures less than 10°C (50°F), allow the computer to rise slowly to an optimal operating temperature before use. This process might take up to two hours. Using the computer in a lower operating temperature might result in irreparable damage to your computer.

Relative humidity

- Operating: 10%-80% (non-condensing)
- Storage: 10%–90% (non-condensing)

© Copyright Lenovo 2020

Cleaning and maintenance

With appropriate care and maintenance, your computer will serve you reliably. The following topics offer information to help you keep your computer working with best performance.

Basic maintenance tips

Here are some basic points about keeping your computer functioning properly:

- Keep the computer in a clean, dry environment. Ensure that the computer rests on a flat, steady surface.
- Do not cover any of air vents. These air vents provide airflow to keep the computer from overheating.
- Keep electrical appliances such as an electric fan, radio, high-powered speakers, air conditioner, and microwave oven away from your computer because the strong magnetic fields generated by these appliances can damage the monitor and data on the storage drive.
- Keep food and drinks away from all parts of the computer. Food particles and spills might make the keyboard and mouse stick and unusable.
- Do not get the power switches or other controls wet. Moisture can damage these parts and cause an electrical hazard.
- Always disconnect a power cord by grasping the plug instead of the cord.
- Keep the computer software, device drivers, and operating system up-to-date.
- Empty your recycle bin on a regular basis.
- Clean out your Inbox, Sent Items, and Deleted Items folders in your e-mail application on a regular basis.
- Clean up files and free up storage drive space and memory space occasionally to prevent performance problems.
- Keep a log book. Entries might include major software or hardware changes, device-driver updates, intermittent problems and what you did to resolve them, and other issues you might have experienced. The cause of a problem might be change in hardware, change in software, or any other actions that might have taken place. A log book can help you or a Lenovo technician determine the cause of a problem.
- Back up your data on the storage drive regularly. You can restore the storage drive from a backup.
- Create a recovery medium as early as possible. You can use the recovery medium to recover your operating system even if Windows fails to start up.
- Get the most up-to-date operating system update patches, software programs, and device drivers.

Maintenance tips about moving the computer

Before moving the computer, take the following precautions:

1. Back up your data on the storage drive.
2. Remove any media from the drives and turn off all connected devices and the computer. Then, disconnect all power cords from electrical outlets and disconnect all cables that are connected to the computer.
3. If you saved the original shipping cartons and packing materials, use them to pack the units. If you are using different cartons, cushion the units to avoid damage.

When you move the computer to another country or region, you must take local electrical standards into consideration. If the local electrical outlet style is different from the type you are currently using, contact the Lenovo Customer Support Center to purchase either an electrical plug adapter or a new power cord.

Clean your computer

CAUTION:

Remove any media from the drives and turn off all connected devices and the computer. Then, disconnect all power cords from electrical outlets and disconnect all cables that are connected to the computer.

It is a good practice to clean your computer periodically to protect the surfaces and ensure trouble-free operation.

Clean the computer surface: Wipe it with a lint-free cloth dampened in mild soap and water. Avoid applying liquids directly to the surface.

Clean the keyboard: Wipe the keys one by one with a lint-free cloth dampened in mild soap and water. If you wipe several keys at a time, the cloth might hook onto an adjacent key and possibly damage it. Avoid spraying cleaner directly onto the keyboard. To remove any crumbs or dust from beneath the keys, you can use a camera blower with a brush or use cool air from a hair dryer.

Clean the computer screen: Scratches, oil, dust, chemicals, and ultraviolet light can affect the performance of your computer screen. Use a dry, soft lint-free cloth to wipe the screen gently. If you see a scratchlike mark on your screen, it might be a stain. Wipe or dust the stain gently with a soft, dry cloth. If the stain remains, moisten a soft, lint-free cloth with water or eyeglass cleaner, but do not apply liquids directly to your computer screen. Ensure that the computer screen is dry before closing it.

© Copyright Lenovo 2020

Chapter 1. Product overview

This chapter provides basic information to help you get familiar with your computer.

Hardware locations

This section provides information about the locations of your computer hardware.

Front view

Note: The computer hardware might look slightly different from the illustration.

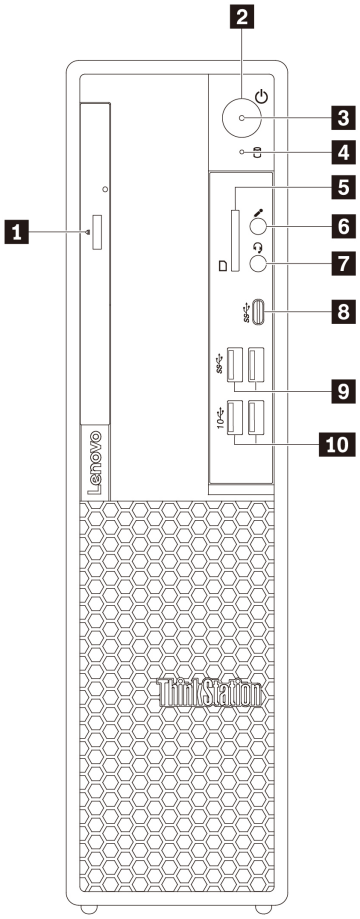

Figure 1. Front connectors, controls, and indicators

1 Slim-optical-drive eject button (available on some models)	2 Power button
3 Power indicator	4 Storage drive activity indicator
5 SD card slot (available on some models)	6 Microphone connector

© Copyright Lenovo 2020

7 Headset connector	8 USB-C™ connector
9 USB 3.1 connectors Gen 1 (2)	10 USB 3.1 connectors Gen 2 (2)

1 Slim-optical-drive eject button (available on some models)

Press the button to eject the tray of the slim optical drive. To close the tray, push the tray inward until you hear a click.

2 Power button

Press the power button to turn on your computer. If your computer is unresponsive, you can turn off the computer by pressing and holding the power button for four or more seconds.

3 Power indicator

When the power indicator is on, the computer is turned on.

4 Storage drive activity indicator

This indicator shows the status of the internal storage drives (such as hard disk drives or solid-state drives).

On: The storage drives are active and data is being transferred.

Off (when the computer is on): The storage drives are not in use or no data is being transferred.

5 SD card slot (available on some models)

Insert a secure digital (SD) card into the slot to access the data on the card.

6 Microphone connector

Use this connector to attach a microphone to your computer when you want to record sound or if you use speech-recognition software.

7 Headset connector

Use this connector to attach a headset to your computer.

8 USB-C connector

The USB-C connector on your computer supports the USB Type-C™ standard. With an appropriate USB-C cable connected, you can use the connector to transfer data or charge your device.

9 USB 3.1 connectors Gen 1 (2)

The USB 3.1 connector Gen 1 is used for connecting USB-compatible devices, such as a USB mouse, USB storage drive, USB printer, or digital camera.

10 USB 3.1 connectors Gen 2 (2)

With greater data transfer rate, the USB 3.1 connector Gen 2 is used for connecting USB-compatible devices, such as a USB mouse, USB storage drive, USB printer, or digital camera.

Rear view

Some connectors on the rear of your computer are color-coded to help you determine where to connect the cables on your computer.

Note: The computer hardware might look slightly different from the illustration.

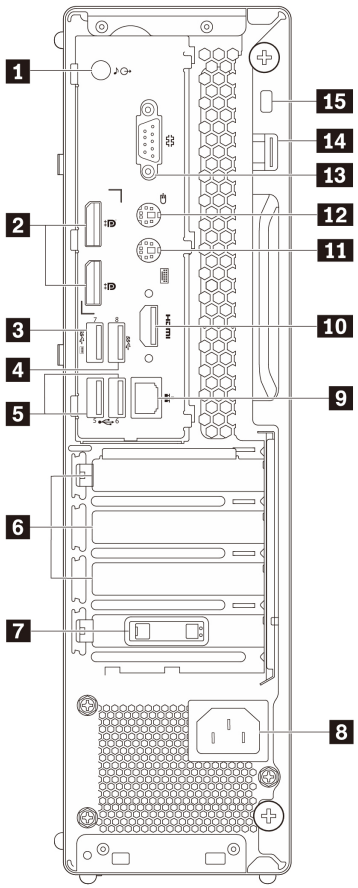

Figure 2. Rear connectors

1 Audio line-out connector	2 DisplayPort® connectors (2)
3 USB 3.1 connector Gen 1 (supports smart power on)	4 USB 3.1 connector Gen 1
5 USB 2.0 connectors (2)	6 PCIe card area*
7 Cable-lock slots (available on some models)	8 Power-cord connector
9 Ethernet connector	10 DisplayPort connector or HDMI™ connector (available on some models)
11 PS/2 keyboard connector (available on some models)	12 PS/2 mouse connector (available on some models)
13 Serial connector	14 Padlock loop
15 Security-lock slot	

Notes: * A discrete graphics card or a network adapter can be installed in the appropriate Peripheral Component Interconnect Express (PCIe) card slot. If such a card is installed, use the connectors on the card

instead of the corresponding connectors on the computer to optimize the performance. Depending on your computer model, the preinstalled cards might vary. One or more graphics cards might be installed to provide the following connectors:

- Digital Visual Interface (DVI) connector
- DisplayPort® connector
- Mini DisplayPort® connector

DVI monitor connector

Use this connector to attach a DVI monitor or other compatible devices.

DisplayPort connector

Use this connector to attach a high-performance monitor, a direct-drive monitor, or other compatible devices.

Mini DisplayPort connector

Use this connector to attach a high-performance monitor, a direct-drive monitor, or other compatible devices. The Mini DisplayPort connector is a miniaturized version of a DisplayPort connector.

1 Audio line-out connector

The audio line-out connector is used to send audio signals from the computer to external devices, such as headphones.

2 DisplayPort connectors (2)

Use this connector to attach a high-performance monitor, a direct-drive monitor, or other compatible devices.

3 USB 3.1 connector Gen 1

Use this connector to attach a USB-compatible device, such as a USB keyboard, mouse, storage drive, or printer.

This USB 3.1 connector Gen 1 supports the smart power on feature. When you connect a supported keyboard to this connector, you can turn on the computer or wake it up from hibernation mode by pressing Alt+P on the keyboard. You can enable or disable the smart power on feature from the Setup Utility program.

4 USB 3.1 connector Gen 1

Use this connector to attach a USB-compatible device, such as a USB keyboard, mouse, storage drive, or printer.

5 USB 2.0 connectors (2)

Use this connector to attach a USB-compatible device, such as a USB keyboard, mouse, storage drive, or printer.

6 PCIe card area

To further improve the computer performance, you can install PCIe cards into this area. Depending on your computer model, the preinstalled cards might vary.

7 Cable-lock slots (available on some models)

Used to secure a cable lock. For more information, see “Attaching a cable lock” on page 29.

8 Power-cord connector

Connect the power cord to your computer for power supply.

9 Ethernet connectors (2)

Connect an Ethernet cable for a local area network (LAN).

Note: To operate the computer within Federal Communications Commission (FCC) Class B limits, use a Category 5 Ethernet cable.

10 DisplayPort connector or HDMI connector (available on some models)

Depending on the computer model, the connector might be DisplayPort connector or HDMI connector.

- **DisplayPort connector**

  Use this connector to attach a high-performance monitor, a direct-drive monitor, or other compatible devices.
- **HDMI connector**

  The High-Definition Multimedia Interface (HDMI) connector is a digital audio and video interface. It enables you to connect your computer to a compatible digital audio device or video monitor, such as an high-definition digital television (HDTV).

11 PS/2 keyboard connector (available on some models)

Use this connector to attach a Personal System/2 (PS/2) keyboard.

12 PS/2 mouse connector (available on some models)

Use this connector to attach a PS/2 mouse, a trackball, or other pointing devices.

13 Serial connector

Use this connector to attach an external modem, a serial printer, or other devices that use a 9-pin serial connector.

14 Padlock loop

Connect a padlock to secure your computer. For more information, see “Locking the computer cover” on page 27.

15 Security-lock slot

Attach a Kensington-style cable lock to the security-lock slot to secure your computer. For more information, see “Attaching a Kensington-style cable lock” on page 29.

Computer components

Notes:

- Depending on the model, your computer might look slightly different from the illustration.
- To prepare your computer, see “Preparing your computer” on page 54.

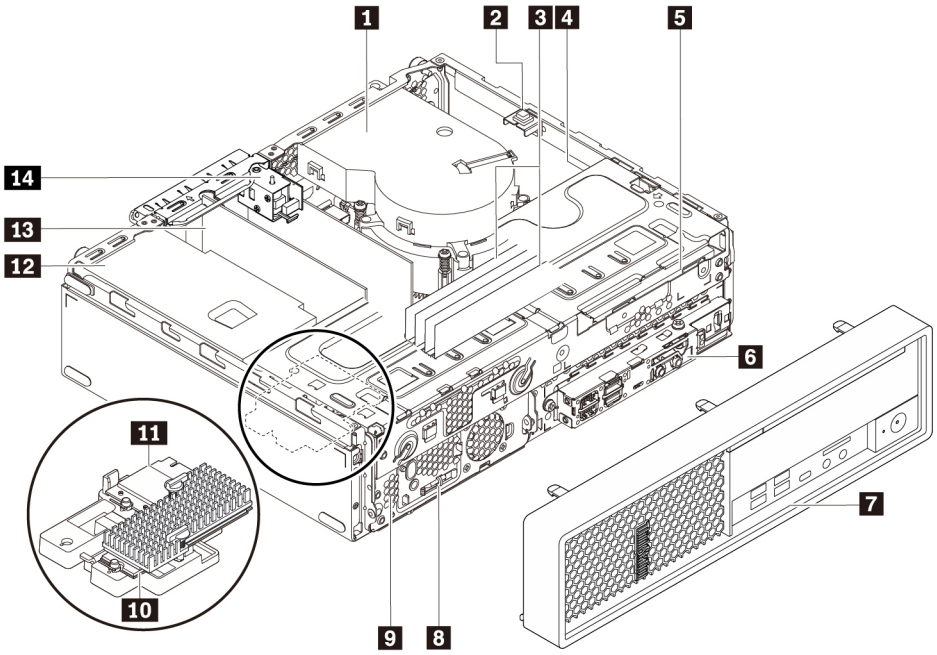

Figure 3. Component locations

1 Heat-sink-and-fan assembly*	2 Cover presence switch (also called intrusion switch)
3 Memory modules*	4 Storage drive*
5 Slim optical drive*	6 SD card slot*
7 Front bezel	8 Thermal sensor
9 Internal speaker	10 M.2 solid-state drive*
11 Wi-Fi card*	12 Power supply assembly
13 PCIe card*	14 E-lock*

* Configuration varies by computer models.

Parts on the system board

Note: The system board might look slightly different from the illustration.

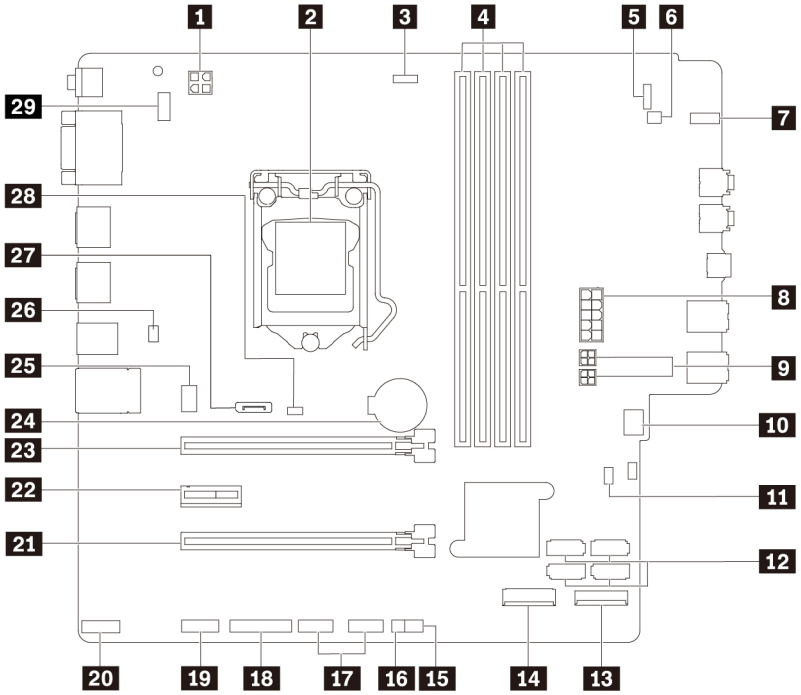

Figure 4. System board part locations

1 4-pin power connector	2 Microprocessor
3 Microprocessor fan connector	4 Memory slots (DIMM)
5 Front-bezel connector	6 Internal-speaker connector
7 Storage-drive activity indicator	8 10-pin power connector
9 SATA power connectors	10 Front-fan connector
11 Clear CMOS/Recovery jumper	12 SATA connectors
13 M.2 solid-state drive slot	14 Wi-Fi card slot
15 Thermal-sensor connector	16 ThinkStation® LED connector
17 USB 2.0 connectors	18 Parallel connector
19 Serial port (COM) connector	20 Thunderbolt™ control connector
21 PCIe x16 card slot (negotiable link width x4)	22 PCIe x1 card slot
23 PCIe x16 card slot	24 Coin-cell battery
25 Rear-fan connector	26 E-lock connector
27 DisplayPort connector	28 Cover presence switch connector (Intrusion switch connector)
29 PS/2 keyboard and mouse connector	

Internal storage drives

Internal storage drives are devices that your computer uses to read and store data. You can add drives to your computer to increase storage capacity and enable your computer to read other types of media. Internal storage drives are installed in bays.

When you remove or install an internal storage drive, note the type and size of the drive that each bay supports and correctly connect the required cables. Refer to the appropriate section in Chapter 7 “Hardware removal and installation” on page 53 for instructions on how to remove or install internal storage drives for your computer.

The following illustration shows the locations of the storage drive bays.

Note: The computer hardware might look slightly different from the illustration.

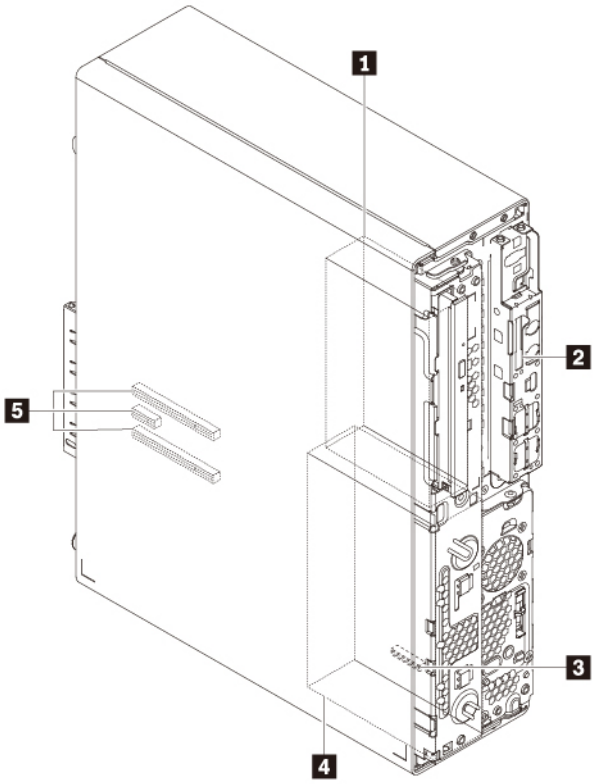

Figure 5. Storage drive bay locations

1 Storage drive cage (available on some models)	2 SD card slot (available on some models)
3 M.2 solid-state drive slot	4 Storage drive bay
5 PCIe card slots (3)	

1 Storage drive cage (available on some models)

You can install hard disk drives or solid-state drives in the storage drive cage.

2 SD card slot (available on some models)

An SD card is installed in some models.

3 M.2 solid-state drive slot

An M.2 solid-state drive is installed in some models.

4 Storage drive bay

You can install hard disk drives or solid-state drives in the storage drive bay.

5 PCIe card slots (3)

You can install compatible PCIe cards and PCIe solid-state drives in the PCIe card slots.

Machine type and model label

The machine type and model label identifies your computer. When you contact Lenovo for help, the machine type and model information helps support technicians to identify your computer and provide faster service.

The machine type and model label is attached on the top of your computer as shown.

Note: The computer hardware might look slightly different from the illustration.

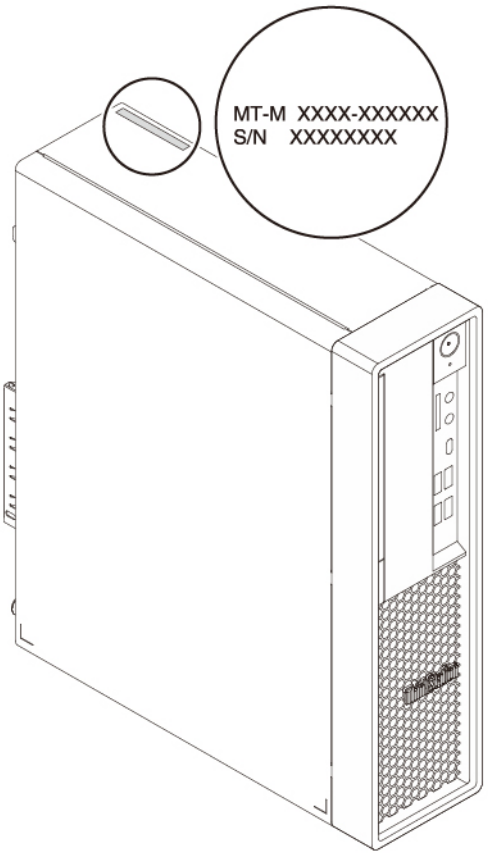

Figure 6. Machine type and model label

Computer features

For your specific computer model, some features might vary or not apply.

Information about your computer

- To view basic information (such as microprocessor and memory information) about your computer, do the following:
  1. Click the Start button to open the Start menu.
  2. Click **Settings → System → About**.
- To view detailed information about the devices (such as the optical drive and network adapters) on your computer, do the following:
  1. Right-click the Start button to open the Start context menu.
  2. Click **Device Manager**.
  3. Locate and double-click your device in **Device Manager** to view device properties. Type the administrator password or provide confirmation if prompted.

Memory

Up to four double data rate 4 (DDR4) error correction code (ECC) unbuffered dual inline memory modules (UDIMMs) or non-ECC UDIMMs

Storage drives

Your computer supports the following storage drives:

- Hard disk drive
- M.2 solid-state drive with the Intel® Optane™ technology (available on some models)
- M.2 solid-state drive without the Intel Optane technology (available on some models)
- Slim optical drive (available on some models)
- SD card (available on some models)
- Solid-state drive (available on some models)

To view the amount of storage drive space, do the following:

1. Right-click the Start button to open the Start context menu.
2. Click **Disk Management** and follow the instructions on the screen.

Video features

- PCIe x16 graphics card slots on the system board for discrete graphics cards
- Video connectors on a discrete graphics card:
  - DVI connector (available on some models)
  - DisplayPort connector (available on some models)
  - Mini DisplayPort connector (available on some models)

Audio features

The integrated audio controller supports the following connectors and devices on your computer:

- Audio line-out connector
- Headset connector

- Internal speaker
- Microphone connector

Input/Output (I/O) features

- 100/1000 Mbps Ethernet connector
- 9-pin serial connector
- Audio connectors: audio line-out connector, microphone connector, and headset connector
- Display connectors (vary by graphics card): DisplayPort connector, DVI connector, and Mini DisplayPort connector
- PS/2 keyboard connector (available on some models)
- PS/2 mouse connector (available on some models)
- USB connectors
- USB-C connector

Expansion

- Memory slots
- M.2 solid-state drive slot
- Storage drive bay
- Storage drive cage (available on some models)
- SD card slot (available on some models)
- PCIe x1 card slot
- PCIe x16 card slot (negotiable link width x4)
- PCIe x16 graphics card slot

Power supply

Your computer comes with one of the following power supplies:

- 210-watt automatic voltage-sensing power supply
- 260-watt automatic voltage-sensing power supply

Wireless features

Depending on your computer model, the following wireless features are supported:

- Wireless LAN
- Bluetooth

System management features

- Ability to store power-on self-test (POST) hardware test results
- Desktop Management Interface (DMI)

  Desktop Management Interface provides a common path for users to access information about all aspects of a computer. The information includes the processor type, installation date, attached printers and other peripherals, power sources, and maintenance history.
- ErP LPS compliance mode

  The energy-related products directive (ErP) lowest power state (LPS) compliance mode reduces the consumption of electricity when your computer is in sleep or off mode. For more information, see “Enabling or disabling the ErP LPS compliance mode” on page 34.

- Intel® Intelligent Cooling Engine (ICE)

  The Intelligent Cooling Engine is a system thermal management solution that enables your computer to run with better thermal and acoustic performance. The ICE function also monitors the thermal performance of your computer to identify thermal problems.

- Intel® Standard Manageability (ISM)

  Intel Standard Manageability builds certain functionalities into computer hardware and firmware. Therefore, computers are less expensive for businesses and easier to monitor, maintain, update, upgrade, and repair.

- Intel Active Management Technology (Intel AMT)

  With specific Intel platform capabilities and third-party management and security applications, Intel Active Management Technology enables IT administrators or managed service providers to easily and remotely discover, repair, and protect their networked computing assets.

- Preboot Execution Environment (PXE)

  Preboot Execution Environment enables you to start computers using a network interface. This manner is independent of starting computers from data storage devices (such as the hard disk drive) or installed operating systems.

- System Management (SM) basic input/output system (BIOS) and SM software

  The SM BIOS specification defines data structures and access methods in a BIOS. Therefore, a user or an application can store and retrieve information specific about the computer in question.

- Wake on LAN (WOL)

  Wake on LAN is an Ethernet computer networking standard that allows a computer to be turned on or woken up by a network message. The message is usually sent by a program running on another computer on the same local area network.

- Windows Management Instrumentation (WMI)

  Windows Management Instrumentation is a set of extensions to the Windows Driver Model. It provides an operating system interface through which instrumented components provide information and notification.

Security features

- Ability to enable and disable a device
- Ability to enable and disable USB connectors individually
- Antivirus program
- BIOS passwords and Microsoft® Windows® accounts to deter unauthorized use of your computer
- Cable lock
- Computrace Agent software embedded in firmware (for selected models)
- Cover presence switch (also called intrusion switch)
- Firewalls
- Smart USB Protection function
- Startup sequence control
- Startup without a keyboard or mouse
- Support for a Kensington-style cable lock
- Support for a padlock
- Trusted Platform Module (TPM)

Preinstalled operating system

Your computer is preinstalled with the Windows 10 operating system. Additional operating systems might be identified by Lenovo as compatible with your computer. To determine if an operating system has been certified or tested for compatibility, check the Web site of the operating system provider.

Statement on USB transfer rate

Depending on many factors such as the processing capability of the host and peripheral devices, file attributes, and other factors related to system configuration and operating environments, the actual transfer rate using the various USB connectors on this device will vary and will be slower than the data rate listed below for each corresponding device.

USB device	Data rate (Gbit/s)
3.2 Gen 1 / 3.1 Gen 1	5
3.2 Gen 2 / 3.1 Gen 2	10
3.2 Gen 2 × 2	20

Computer specifications

This section lists the physical specifications for your computer.

Dimensions

- Width: 92.5 mm (3.6 inches)
- Height: 343.5 mm (13.5 inches)
- Depth: 305.6 mm (12 inches)

Weight

Maximum configuration as shipped: 6.0 kg (13.2 lb)

Environment

- Air temperature:

  Operating: From 10 °C (50°F) to 35°C (95°F)

  Storage in original shipping package: From -40°C (-40°F) to 60°C (140°F)

  Storage without package: From -10°C (14°F) to 65°C (149°F)
- Humidity:

  Operating: 30%–90% (non-condensing)

  Storage: 20%–90% (non-condensing)
- Altitude:

  Operating: From -15.2 m (-50 ft) to 3048 m (10 000 ft)

  Storage: From -15.2 m (-50 ft) to 10 668 m (35 000 ft)

Electrical input

- Input voltage: From 100 V ac to 240 V ac
- Input frequency: 50/60 Hz

Programs

This section provides information about the programs on your computer.

Accessing a program on your computer

To access a program on your computer, do one of the following:

- From Windows Search:
  1. Type the program name into the search box next to the Start button.
  2. In the search results, click the name of the desired program to launch the program.
- From the Start menu or Control Panel:
  1. Click the Start button to open the Start menu. Then, click the name of the desired program to launch the program.
  2. If the program name is not displayed on the Start menu, access the program from Control Panel.
     a. Click the Start button to open the Start menu.
     b. Click **Windows System → Control Panel**.
     c. View Control Panel by Large icons or Small icons, and then click the name of the desired program to launch the program.

An introduction to Lenovo programs

This section provides information about the major Lenovo programs available on your operating system.

Note: Depending on your computer model, some of the following programs might not be available.

- **Lenovo Vantage**

  Your computer's best features and capabilities should be easy to access and understand. With Lenovo Vantage, they are.

  Use Lenovo Vantage to do the following:

  – Know the device status easily and customize device settings.
  – Download and install UEFI BIOS, firmware, and driver updates to keep your computer up-to-date.
  – Monitor your computer health, and secure your computer against outside threats.
  – Look up warranty status (online).
  – Access *User Guide* and helpful articles.

  Notes:

  – The available features vary depending on the computer model.
  – Lenovo Vantage makes periodic updates of the features to keep improving your experience with your computer. The description of features might be different from that on your actual user interface.

- **ThinkStation Diagnostics**

  The ThinkStation Diagnostics program enables you to troubleshoot and resolve computer problems. The program notifies you of any issues detected by the real-time hardware diagnostic monitoring function. The program also provides the details of the issue, analyzes possible causes, and provides solutions.

Chapter 2. Using your computer

This chapter provides information to help you use the various features provided by your computer.

Registering your computer

When you register your computer with Lenovo, you enter required information into a Lenovo database. The information enables Lenovo to contact you when there is a recall or other severe problem and provide quicker service when you call Lenovo for help. In addition, some locations offer extended privileges and services to registered users.

To register your computer with Lenovo, go to https://support.lenovo.com/productregistration and follow the instructions on the screen.

Get started with Windows 10

Learn the basics of Windows 10 and start working with it right away. For more information about Windows 10, see the Windows help information.

Windows account

A user account is required to use the Windows operating system. It can either be a Windows user account or a Microsoft account.

Windows user account

When you start Windows for the first time, you are prompted to create a Windows user account. This first account you created is of the “Administrator” type. With an Administrator account, you can create additional user accounts or change account types by doing the following:

1. Open the **Start** menu and select **Settings → Accounts → Family & other users**.
2. Follow the on-screen instructions.

Microsoft account

You can also log in to the Windows operating system with a Microsoft account.

To create a Microsoft account, go to the Microsoft sign-up page at https://signup.live.com and follow the on-screen instructions.

With a Microsoft account, you can:

- Enjoy one-time signing in if you are using other Microsoft services, such as OneDrive, Skype, and Outlook.com.
- Sync personalized settings across other Windows-based devices.

© Copyright Lenovo 2020

Windows user interface

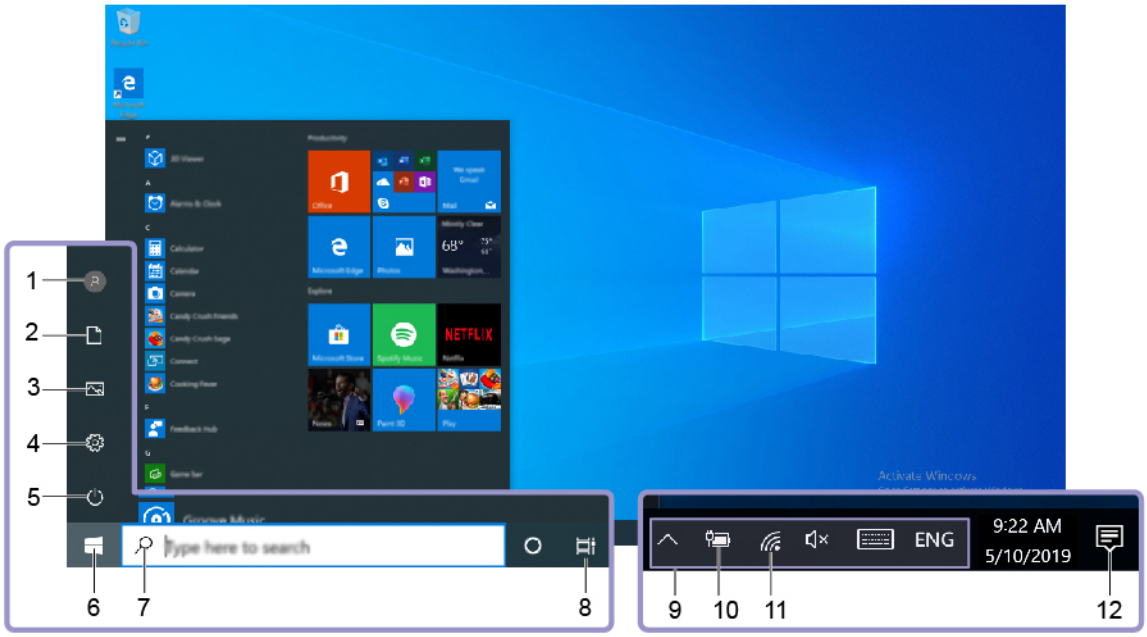

1. **Account**	Change account settings, lock the computer, or sign out from the current account.
2. **Documents**	Open the **Documents** folder, a default folder to save your received files.
3. **Pictures**	Open the **Pictures** folder, a default folder to save your received pictures.
4. **Settings**	Launch Settings.
5. **Power**	Shut down, restart, or put the computer into sleep mode.
6. **Start button**	Open the **Start** menu.
7. **Windows Search**	Type what you are looking for in the search box and get search results from your computer and the Web.
8. **Task View**	Display all opened apps and switch among them.
9. **Windows notification area**	Display notifications and status of some features.
10. **Battery status icon**	Display power status and change battery or power settings. When your computer is not connected to ac power, the icon changes to .
11. **Network icon**	Connect to an available wireless network and display the network status. When connected to a wired network, the icon changes to .
12. **Action center**	Display the latest notifications from apps and provide quick access to some features.

Open the Start menu

- Click the **Start** button.
- Press the Windows logo key on the keyboard.

Open the Start context menu

Right-click the **Start** button.

Access Control Panel

- Open the **Start** menu and click **Windows System → Control Panel**.
- Use Windows Search.

Launch an app

- Open the **Start** menu and select the app you want to launch.
- Use Windows Search.

Setting the computer volume

To set the computer volume, do the following:

1. Click the volume icon in the Windows notification area on the taskbar.

   Note: If the volume icon is not displayed in the Windows notification area, add the icon to the notification area. See the Windows help system.

2. Follow the instructions on the screen and the hover text to adjust the volume, mute the speaker, or unmute the speaker.

Using a disc

This section provides instructions on how to use a disc and the optical drive.

Guidelines about using the optical drive

When using the optical drive, follow these guidelines:

- Do not place the computer in a location where the drive is exposed to any of the following conditions:
  - High temperature
  - High humidity
  - Excessive dust
  - Excessive vibration or sudden shock
  - An inclined surface
  - Direct sunlight
- Do not insert any object other than a disc into the drive.
- Do not insert damaged discs into the drive. Warped, scratched, or dirty discs can damage the drive.
- Before moving the computer, remove the disc from the drive.

Handling and storing a disc

When handling and storing a disc, follow these guidelines:

- Hold the disc by its edges. Do not touch the surface of the side that is not labeled.
- To remove dust or fingerprints, wipe the disc with a clean, soft cloth from the center to the outside. Wiping the disc in a circular direction might cause loss of data.
- Do not write or stick paper on the disc.
- Do not scratch or mark the disc.
- Do not place or store the disc in direct sunlight.
- Do not use benzene, thinners, or other cleaners to clean the disc.

- Do not drop or bend the disc.

Playing and removing a disc

To play a disc, do the following:

1. With the computer on, press the eject/close button on the front of the optical drive. The tray slides out of the drive.
2. Insert a disc into the tray. Some optical drive has a snap hub in the center of the tray. If your drive has a snap hub, support the tray with one hand and then push the center of the disc until it snaps into place.
3. Press the eject/close button again or gently push the tray forward to close the tray. The disc player program starts automatically. For more information, refer to the help system of the disc player program.

To remove a disc from the optical drive, do the following:

1. With the computer on, press the eject/close button on the front of the optical drive. The tray slides out of the drive.
2. Carefully remove the disc from the tray.
3. Press the eject/close button again or gently push the tray forward to close the tray.

Note: If the tray does not slide out of the drive when you press the eject/close button, turn off your computer. Then, insert a straightened paper clip into the emergency-eject hole adjacent to the eject/close button. Use the emergency eject only in an emergency.

Recording a disc

If your optical drive supports recording, you can record a disc.

Recording a disc using Windows tools

To record a disc using Windows tools, do one of the following:

- Burn a disc using the AutoPlay window.
    1. Ensure that the disc is played automatically.
        a. Click the Start button to open the Start menu.
        b. Click **Settings → Devices → AutoPlay**.
        c. Select or turn on **Use AutoPlay for all media and devices**.
    2. Insert a recordable disc into the optical drive that supports recording. The AutoPlay window opens.
    3. Follow the instructions on the screen.
- Burn a disc using Windows Media® Player.
    1. Insert a recordable disc into the optical drive that supports recording.
    2. Open Windows Media Player. See “Accessing a program on your computer” on page 14.
    3. Follow the instructions on the screen.
- Burn a disc from an ISO file.
    1. Insert a recordable disc into the optical drive that supports recording.
    2. Double-click the ISO file.
    3. Follow the instructions on the screen.

Recording a disc using preinstalled programs

To record a disc using preinstalled programs, do the following:

1. Insert a recordable disc into the optical drive that supports recording.

2. Open the PowerDVD Create, PowerProducer, or Power2Go program (depending on the computer model). See “Accessing a program on your computer” on page 14.
3. Follow the instructions on the screen.

Connecting to a network

This section provides instructions on how to connect to a network.

Connecting to an Ethernet LAN

You can connect your computer to an Ethernet LAN by connecting an Ethernet cable to the Ethernet connector.

DANGER

To avoid the risk of electrical shock, do not connect the telephone cable to the Ethernet connector.

Connecting to a wireless LAN

You can connect your computer to a wireless LAN without the use of an Ethernet cable but by means of radio waves only.

Note: The wireless LAN feature is available only on some models.

To establish a wireless-LAN connection, do the following:

1. Ensure that a wireless LAN is available and the wireless LAN feature on your computer is working.
2. Click the wireless-network-connection-status icon in the Windows notification area to display available wireless networks.

   Note: If the wireless-network-connection-status icon is not displayed in the Windows notification area, add the icon to the notification area. See the Windows help system.
3. Click a wireless LAN, and then click **Connect** to connect your computer to it. Provide required information if needed.

Connecting to a Bluetooth-enabled device

Bluetooth is a short-range wireless communications technology. Use Bluetooth to establish a wireless connection between your computer and another Bluetooth-enabled device within a distance of about 10 m (32.8 ft).

Note: The Bluetooth feature is available only on some models.

To connect to a Bluetooth-enabled device, do the following:

1. Turn on the Bluetooth feature of your computer. Ensure that the Bluetooth-enabled device is located within a distance of about 10 m (32.8 ft) from your computer.
2. Click the Bluetooth icon in the Windows notification area on the taskbar. Then, click **Add a Device** and follow the instructions on the screen.

   Note: If the Bluetooth icon is not displayed in the Windows notification area, add the icon to the notification area. See the Windows help system.

Chapter 3. You and your computer

This chapter provides information about accessibility, ergonomic, and cleaning and maintenance.

Arranging your workspace

Arrange your workspace to suit your needs and the kind of work you do. This section provides information about the factors that affect the way you arrange your workspace.

Glare and lighting

Position the monitor to minimize glare and reflections from overhead lights, windows, and other light sources. Reflected light from shiny surfaces can cause annoying reflections on your screen. When possible, place the monitor at right angles to windows and other light sources. If necessary, reduce overhead lighting by turning off lights or using lower wattage bulbs. If you install the monitor near a window, use curtains or blinds to block the sunlight. You can adjust the brightness and contrast controls on the monitor as the room lighting changes throughout the day.

Where it is impossible to avoid reflections or to adjust the lighting, an antiglare filter placed over the screen might be helpful. However, these filters might affect the clarity of the image on the screen; try them only after you have exhausted other methods of reducing glare.

Air circulation

Your computer produces heat. The computer has a fan that pulls in fresh air and forces out hot air through the air vents. Blocking the air vents can cause overheating, which might result in a malfunction or damage. Position the computer so that nothing blocks the air vents; usually, 51 mm (2 inches) of air space is sufficient. Ensure that the vented air is not blowing on people.

Electrical outlet locations and cable lengths

The following factors might determine the final placement of your computer:

- Locations of electrical outlets
- Length of power cords or power adapters
- Length of the cables that are connected to other devices

For more information about power cords or power adapters, see “Power cords and power adapters” on page iv.

Comfort

Although no single working position is ideal for everyone, here are a few guidelines to help you find a position that suits you best. The following figure sets an example for your reference.

© Copyright Lenovo 2020



- Screen position: Keep the screen at a comfortable viewing distance, usually 51–61 cm (20–24 inches). Then, adjust the screen so that the top of the screen is at or slightly below eye level and you can view it without twisting your body.
- Chair position: Use a chair that gives you good back support and seat height adjustment. Use chair adjustments to best suit your desired posture.
- Head position: Keep your head and neck in a comfortable and neutral (vertical or upright) position.
- Arm and hand positions: Keep your forearms, wrists, and hands in a relaxed and neutral (horizontal) position. Type with a soft touch without pounding the keys.
- Leg position: Keep your thighs parallel to the floor and your feet flat on the floor or on a footrest.

Make minor modifications in your working posture to deter the onset of discomfort caused by long periods of working in the same position. Frequent short breaks from your work also help to prevent minor discomfort associated with your working posture.

Keeping your computer current

In most cases, it is a good practice to have the most up-to-date operating system update patches, software programs, and device drivers. This section provides instructions on how to get the latest updates for your computer.

Getting the latest system updates

To get the latest system updates for your computer, ensure that your computer is connected to the Internet and do one of the following:

- Open Lenovo Vantage to check the available update packages. If the latest update package is available, follow the on-screen instructions to download and install the package.

  To open the Lenovo Vantage program, see “Accessing a program on your computer” on page 14.
- Use Windows Update to get the system updates, such as security fixes, new versions of Windows components, and device driver updates.
  1. Click the Start button to open the Start menu.
  2. Click **Settings → Update & Security → Windows Update**.
  3. Follow the instructions on the screen.

Note: The device drivers provided by Windows Update might not be tested by Lenovo. It is recommended that you get device drivers by using Lenovo programs or from the Lenovo Web site at https://support.lenovo.com.

Accessibility information

Lenovo is committed to providing users who have hearing, vision, and mobility limitations with greater access to information and technology. This section provides information about the ways these users can get the most out of their computer experience. You also can get the most up-to-date accessibility information from the following Web site:
https://www.lenovo.com/accessibility

Keyboard shortcuts

The following list contains keyboard shortcuts that can help make your computer easier to use.

Note: Depending on your keyboard, some of the following keyboard shortcuts might not be available.

- **Windows logo key + U**: Open Ease of Access Center
- **Right Shift for eight seconds**: Turn on or turn off Filter Keys
- **Shift five times**: Turn on or turn off Sticky Keys
- **Num Lock for five seconds**: Turn on or turn off Toggle Keys
- **Left Alt+Left Shift+Num Lock**: Turn on or turn off Mouse Keys
- **Left Alt+Left Shift+PrtScn (or PrtSc)**: Turn on or turn off High Contrast

For more information, go to https://windows.microsoft.com/, and then search using any of the following keywords: keyboard shortcuts, key combinations, shortcut keys.

Ease of Access Center

Ease of Access Center on the Windows operating system enables you to configure your computer to suit your physical and cognitive needs.

To use Ease of Access Center, do the following:

1. Click the Start button to open the Start menu.
2. Click **Settings → Ease of Access**.
3. Choose the appropriate tool by following the instructions on the screen.

Ease of Access Center mainly includes the following tools:

- Magnifier

  Magnifier is a useful utility that enlarges the entire screen or part of the screen so that you can see the items better.
- Narrator

  Narrator is a screen reader that reads aloud what is displayed on the screen and describes events such as error messages.
- On-Screen Keyboard

  To input data into your computer using a mouse, joystick, or other pointing devices instead of a physical keyboard, you can use On-Screen Keyboard.
- High Contrast

  High Contrast is a feature that heightens the color contrast of some text and images on your screen. As a result, those items are more distinct and easier to identify.
- Personalized keyboard

Adjust keyboard settings to make your keyboard easier to use. For example, you can use your keyboard to control the pointer and type certain key combinations easier.

- Personalized mouse

  Adjust mouse settings to make your mouse easier to use. For example, you can change the pointer appearance and make it easier to manage windows with the mouse.

Speech Recognition

Speech Recognition enables you to control your computer by voice.

Using only your voice, you can start programs, open menus, click objects on the screen, dictate text into documents, and write and send e-mails. Everything you do with the keyboard and mouse can be done with only your voice.

To use Speech Recognition, do the following:

1. Click the Start button to open the Start menu.
2. Click **Windows System** → **Control Panel**.
3. View Control Panel by Large icons or Small icons, and then click **Speech Recognition**.
4. Follow the instructions on the screen.

Screen-reader technologies

Screen-reader technologies are primarily focused on software program interfaces, help information systems, and various online documents. For additional information about screen readers, see the following:

- Using PDFs with screen readers:
  https://www.adobe.com/accessibility.html?promoid=DJGVE
- Using the JAWS screen reader:
  https://www.freedomscientific.com/Products/Blindness/JAWS
- Using the NVDA screen reader:
  https://www.nvaccess.org/

Screen resolution

You can make the text and images on your screen easier to read by adjusting the screen resolution of your computer.

To adjust the screen resolution, do the following:

1. Right-click a blank area on the desktop.
2. Click **Display settings** → **Display**.
3. Follow the instructions on the screen.

Note: Setting the resolution too low might prevent some items from fitting on the screen.

Customizable item size

You can make the items on your screen easier to read by changing the item size.

- To change the item size temporarily, use the Magnifier tool in Ease of Access Center.
- To change the item size permanently, do the following:
  - Change the size of all the items on your screen. Do the following:
    1. Right-click a blank area on the desktop.
    2. Click **Display settings** → **Display**.

3. Follow the on-screen instructions to change the item size. For some applications, your configuration might not take effect until you sign out and then sign in again.

– Change the size of the items on a Web page.

  Press and hold Ctrl, and then press the plus-sign key (+) to enlarge or the minus-sign key (-) to reduce the text size.

– Change the size of the items on the desktop or a window.

  Note: This function might not work on some windows.

  If your mouse has a wheel, press and hold Ctrl, and then scroll the wheel to change the item size.

Industry-standard connectors

Your computer provides industry-standard connectors that enable you to connect assistive devices.

For more information about the location and function of each connector, see “Hardware locations” on page 1.

TTY/TDD conversion modem

Your computer supports the use of a text telephone (TTY) or the telecommunications device for the deaf (TDD) conversion modem. The modem must be connected between your computer and a TTY/TDD telephone. Then, you can type a message on your computer and send it to the telephone.

Documentation in accessible formats

Lenovo provides electronic documentation in accessible formats, such as properly tagged PDF files or HyperText Markup Language (HTML) files. Lenovo electronic documentation is developed to ensure that visually impaired users can read the documentation through a screen reader. Each image in the documentation also includes adequate alternative text so that visually impaired users can understand the image when they use a screen reader.

Chapter 4. Security

This chapter provides information about how to protect your computer from unauthorized use.

Locking your computer

This section provides instructions on how to lock your computer with the locking devices to keep your computer safe.

Enabling or disabling the E-lock

Your computer may have a security lock solution installed to protect the computer from unauthorized tampering of the internal components. Using the E-Lock, you can mechanically lock or unlock the computer cover.

To enable or disable the E-Lock, do the following:

1. Turn on or restart the computer.
2. Before Windows starts up, repeatedly press and release the F1 or Fn+F1 key until the Setup Utility program opens.
3. Click **Security → Electronic Lock** to enable or disable the E-lock.
4. Press F10 or Fn+F10 to save the changes and reboot the computer.

   Note: Changes do not take effect until the setting is saved and the system is rebooted.

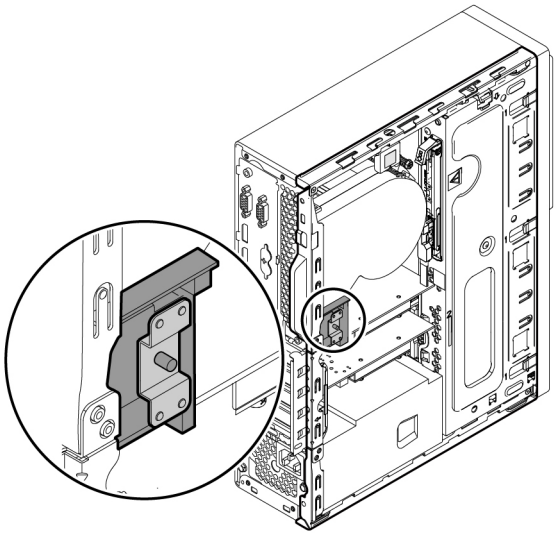

Figure 7. Enabling or disabling the E-lock

Locking the computer cover

Locking the computer cover helps prevent unauthorized people from gaining access to the inside of your computer. Your computer comes with a padlock loop.

Note: The computer hardware might look slightly different from the illustration.

© Copyright Lenovo 2020

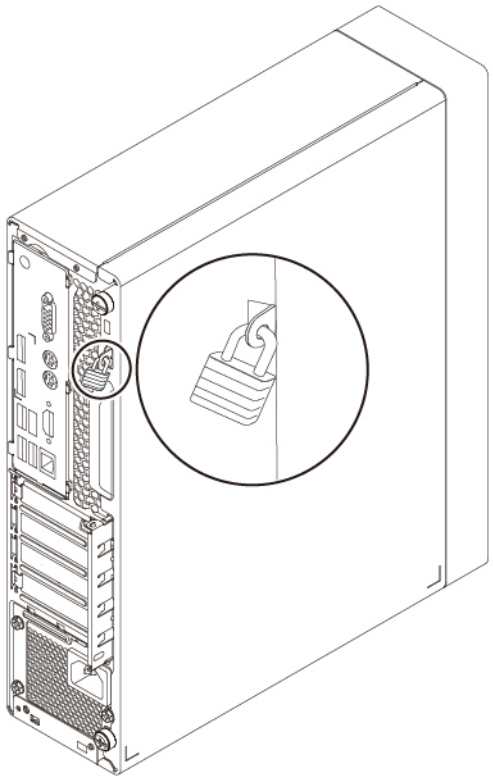

Figure 8. Padlock

Attaching a Kensington-style cable lock

You can use a Kensington-style cable lock to secure your computer to a desk, table, or other non-permanent fixture. The cable lock attaches to the security-lock slot at the rear of your computer. Depending on the type selected, the cable lock can be operated with a key or combination. You can order such a cable lock directly from Lenovo by searching for *Kensington* at:
https://support.lenovo.com

Note: The computer hardware might look slightly different from the illustration.

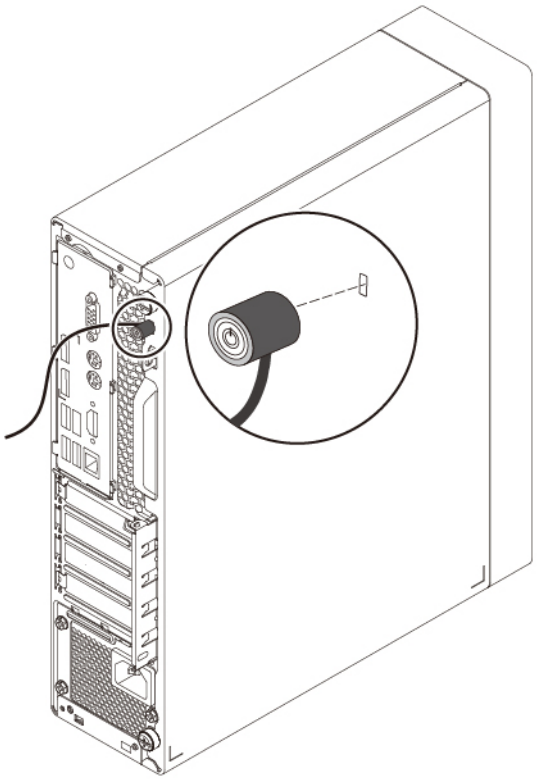

Figure 9. Kensington-style cable lock

Attaching a cable lock

A cable lock can be used to secure devices, such as the keyboard and the mouse, by locking the device cables to your computer. The cable lock attaches to the cable-lock slots on the rear of your computer.

Note: The computer hardware might look slightly different from the illustration.

To attach a cable lock, do the following:

1. Insert the clip 3 into the cable-lock slot 2.
2. Pull the cables you want to lock through the dents in the cable lock.
3. Press the clip 4 into the cable-lock slot 1 until it snaps into position.

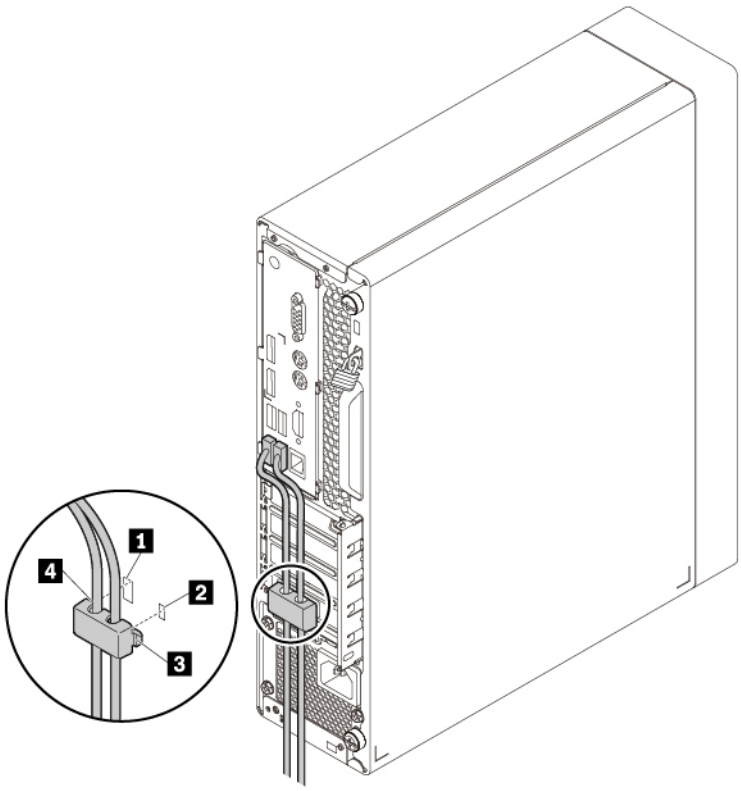

Figure 10. Installing a cable lock

Viewing and changing security settings in the Setup Utility program

To view and change security settings in the Setup Utility program, do the following:

1. Start the Setup Utility program. See “Starting the Setup Utility program” on page 33.
2. Select **Security**.
3. Follow the instructions on the right side of the screen to view and change security settings. You can refer to “Using the Setup Utility program” on page 33 to get basic information about some major security settings.
4. To save settings and exit the Setup Utility program, press F10 or Fn+F10 (depending on the keyboard settings). Then, select **Yes** in the window displayed, and press Enter.

Using passwords and Windows accounts

You can use BIOS passwords and Windows accounts to prevent unauthorized access to your computer and data. To use the BIOS passwords or the Windows accounts, do the following:

- To use BIOS passwords, see “Using BIOS passwords” on page 36.

- To use Windows accounts, do the following:
  1. Click the Start button to open the Start menu.
  2. Click **Settings → Accounts**.
  3. Follow the instructions on the screen.

Using the cover presence switch

The cover presence switch prevents your computer from logging in to the operating system when the computer cover is not properly installed or closed.

To use the cover presence switch, enable the cover-presence-switch connector on the system board first. To achieve this, do the following:

1. Start the Setup Utility program. See “Starting the Setup Utility program” on page 33.
2. Select **Security → Chassis Intrusion Detection** and press Enter.
3. Select **Enabled** and press Enter.
4. To save settings and exit the Setup Utility program, press F10 or Fn+F10 (depending on the keyboard settings), select **Yes** in the window displayed, and press Enter. The cover-presence-switch connector on the system board is enabled.

The cover presence switch starts functioning. If the switch detects that the computer cover is not correctly installed or closed, an error message is displayed when you turn on the computer. To fix the error and log in to the operating system, do the following:

1. Properly remove or install your computer cover. See Chapter 7 “Hardware removal and installation” on page 53.
2. Start and then exit the Setup Utility program. See “Starting the Setup Utility program” on page 33 and “Exiting the Setup Utility program” on page 38.

Using firewalls

A firewall can be hardware, software, or a combination of both depending on the level of security required. Firewalls work on a set of rules to determine which inbound and outbound connections are authorized. If your computer is preinstalled with a firewall program, it helps protect against computer Internet security threats, unauthorized access, intrusions, and Internet attacks. It also protects your privacy. For more information about how to use the firewall program, refer to the help system of your firewall program.

To use Windows Firewall, do the following:

1. Click the Start button to open the Start menu.
2. Click **Windows System → Control Panel**.
3. View Control Panel by Large icons or Small icons, and then click **Windows Defender Firewall**.
4. Follow the instructions on the screen.

Protecting data against viruses

Your computer is preinstalled with an antivirus program to help you guard against, detect, and eliminate viruses.

Lenovo provides a full version of antivirus software on your computer with a free 30-day subscription. After 30 days, you must renew the license to continue receiving the antivirus software updates.

Note: Virus definition files must be kept up-to-date to guard against new viruses.

For more information about how to use your antivirus software, refer to the help system of your antivirus software.

Using the Smart USB Protection function

The Smart USB Protection function is a security function that helps prevent data from being copied from the computer to USB storage devices connected to the computer. You can set the Smart USB Protection function to one of the following modes:

- **Disabled** (default setting): You can use the USB storage devices without limitation.
- **Read Only**: You cannot copy data from the computer to the USB storage devices. However, you can access or modify data on the USB storage devices.
- **No Access**: You cannot access the USB storage devices from the computer.

To configure the Smart USB Protection function, do the following:

1. Start the Setup Utility program. See “Starting the Setup Utility program” on page 33.
2. Select **Security → Smart USB Protection** and press Enter.
3. Select the desired setting and press Enter.
4. To save settings and exit the Setup Utility program, press F10 or Fn+F10 (depending on the keyboard settings). Then, select **Yes** in the window displayed, and press Enter.

Computrace Agent software embedded in firmware (for selected models)

The Computrace Agent software is an IT asset management and computer theft recovery solution. The software detects if changes have been made on the computer, such as hardware, software, or the computer call-in location. You might have to purchase a subscription to activate the Computrace Agent software.

Trusted Platform Module (TPM)

TPM is a secure cryptoprocessor that stores cryptographic keys, which in turn protects information stored in your computer.

Chapter 5. Advanced configuration

This chapter provides information to help you further configure the computer.

Using the Setup Utility program

The Setup Utility program is used to view and change the configuration settings of your computer. This section provides information about only the major configuration settings available in the program.

Note: The operating system settings might override any similar settings in the Setup Utility program.

Starting the Setup Utility program

To start the Setup Utility program, do the following:

1. Turn on or restart your computer.
2. Before the operating system starts up, repeatedly press and release F1 or Fn+F1 (depending on the keyboard settings). Based on the Setup Utility display mode setting, one of the following situations occurs:
   - Text mode: The Setup Utility program opens.
   - Graphic mode (available on some models): The start screen is displayed. Then, select **Setup** and press Enter to open the Setup Utility program.

   Note: If a BIOS password has been set, the Setup Utility program will not open until you enter the correct password. For more information, see “Using BIOS passwords” on page 36.

To view and change the configuration settings, follow the instructions on the screen.

Changing the display language of the Setup Utility program

The Setup Utility program supports three display languages: English, French, and simplified Chinese.

To change the display language of the Setup Utility program, do the following:

1. Start the Setup Utility program. See “Starting the Setup Utility program” on page 33.
2. From the main interface, locate **System Language** and press Enter.
3. Select the display language according to your needs.

Enabling or disabling a device

This section provides information about how to enable or disable user access to hardware devices (such as USB connectors or storage drives).

To enable or disable a device, do the following:

1. Start the Setup Utility program. See “Starting the Setup Utility program” on page 33.
2. Select **Devices**.
3. Select the device you want to enable or disable and press Enter.
4. Select the desired setting and press Enter.
5. To save settings and exit the Setup Utility program, press F10 or Fn+F10 (depending on the keyboard settings). Then, select **Yes** in the window displayed, and press Enter.

© Copyright Lenovo 2020

Enabling or disabling the automatic power-on of your computer

The Automatic Power On item in the Setup Utility program provides various options for you to make your computer start up automatically.

To enable or disable the Automatic Power On features, do the following:

1. Start the Setup Utility program. See “Starting the Setup Utility program” on page 33.
2. Select **Power → Automatic Power On** and press Enter.
3. Select the feature you want to enable or disable and press Enter.
4. Select the desired setting and press Enter.
5. To save settings and exit the Setup Utility program, press F10 or Fn+F10 (depending on the keyboard settings). Then, select **Yes** in the window displayed, and press Enter.

Enabling or disabling the ErP LPS compliance mode

Lenovo computers meet the eco-design requirements of the ErP Lot 3 regulation. For more information, go to:
https://www.lenovo.com/ecodeclaration

You can enable the ErP LPS compliance mode in the Setup Utility program to reduce the consumption of electricity when your computer is off or in sleep mode.

To enable or disable the ErP LPS compliance mode, do the following:

1. Start the Setup Utility program. See “Starting the Setup Utility program” on page 33.
2. Select **Power → Enhanced Power Saving Mode** and press Enter.
3. Select **Enabled** or **Disabled** depending on your needs, and then press Enter. If you select **Enabled**, you also need to disable the Wake on LAN feature. See “Enabling or disabling the automatic power-on of your computer” on page 34.
4. To save settings and exit the Setup Utility program, press F10 or Fn+F10 (depending on the keyboard settings). Then, select **Yes** in the window displayed, and press Enter.

When the ErP LPS compliance mode is enabled, you can wake up your computer by doing one of the following:

- Press the power button.
- Enable the Wake Up on Alarm feature to make your computer wake up at a set time. See “Enabling or disabling the automatic power-on of your computer” on page 34.
- Enable the After Power Loss feature to make your computer wake up when the power supply resumes after a sudden loss of electricity.

  To enable the After Power Loss feature, do the following:

  1. Start the Setup Utility program. See “Starting the Setup Utility program” on page 33.
  2. Select **Power → After Power Loss** and press Enter.
  3. Select **Power On** and press Enter.
  4. To save settings and exit the Setup Utility program, press F10 or Fn+F10 (depending on the keyboard settings). Then, select **Yes** in the window displayed, and press Enter.

Switching between better acoustic and better thermal performance

You can adjust the acoustic and thermal performance of your computer through the **ICE Performance Mode** menu. Two choices are available:

- **Better Acoustic Performance** (default setting): This computer works with less noise at a normal thermal level.
- **Better Thermal Performance**: The computer works at a better thermal level with normal acoustic performance.

To switch between better acoustic performance and better thermal performance, do the following:

1. Start the Setup Utility program. See “Starting the Setup Utility program” on page 33.
2. Select **Power → Intelligent Cooling Engine (ICE)** and press Enter.
3. Select **ICE Performance Mode** and press Enter.
4. Select **Better Acoustic Performance** or **Better Thermal Performance** as desired and press Enter.
5. To save settings and exit the Setup Utility program, press F10 or Fn+F10 (depending on the keyboard settings). Then, select **Yes** in the window displayed, and press Enter.

Enabling or disabling the system to record thermal alert logs

When the ICE thermal alert feature is enabled, if a critical thermal situation occurs, an alert log is written into the Windows system log. The alert log can help you identify thermal problems, such as malfunctioning fans, abnormally high temperature, or poor cooling performances.

To enable or disable the system to record thermal alert logs, do the following:

1. Start the Setup Utility program. See “Starting the Setup Utility program” on page 33.
2. Select **Power → Intelligent Cooling Engine (ICE)** and press Enter.
3. Select **ICE Thermal Alert** and press Enter.
4. Select the desired setting and press Enter.
5. To save settings and exit the Setup Utility program, press F10 or Fn+F10 (depending on the keyboard settings). Then, select **Yes** in the window displayed, and press Enter.

Enabling or disabling the configuration change detection

With the configuration-change detection enabled, if the POST detects configuration changes of some hardware devices (such as storage drives or memory modules), an error message is displayed.

To enable or disable the configuration change detection, do the following:

1. Start the Setup Utility program. See “Starting the Setup Utility program” on page 33.
2. Select **Security → Configuration Change Detection** and press Enter.
3. Select the desired setting and press Enter.
4. To save settings and exit the Setup Utility program, press F10 or Fn+F10 (depending on the keyboard settings). Then, select **Yes** in the window displayed, and press Enter.

To bypass the error message and log in to the operating system, do one of the following:

- Press F2 or Fn+F2 (depending on the keyboard settings).
- Start and then exit the Setup Utility program. See “Starting the Setup Utility program” on page 33 and “Exiting the Setup Utility program” on page 38.

Changing the BIOS settings before installing a new operating system

BIOS settings vary by operating system. Change the BIOS settings before installing a new operating system.

To change the BIOS settings, do the following:

1. Start the Setup Utility program. See “Starting the Setup Utility program” on page 33.
2. From the main interface, select **Exit → OS Optimized Defaults** and press Enter.
3. Depending on the operating system to be installed, do one of the following:
   - To install the Windows 10 (64-bit) operating system, select **Enabled** and press Enter.
   - To install an operating system other than Windows 10 (64-bit), select **Disabled** and press Enter.
4. Select **Yes** in the window displayed and press Enter to confirm your selection.
5. To save settings and exit the Setup Utility program, press F10 or Fn+F10 (depending on the keyboard settings). Then, select **Yes** in the window displayed, and press Enter.

Using BIOS passwords

By using the Setup Utility program, you can set passwords to prevent unauthorized access to your computer and data.

You do not have to set any passwords to use your computer. However, using passwords improves computer security. If you decide to set any passwords, read the following topics.

Password types

The following types of passwords are available in the Setup Utility program:

- Power-on password

  When a power-on password is set, you are prompted to enter a valid password each time the computer is turned on. The computer cannot be used until the valid password is entered.

- Administrator password

  Setting an administrator password deters unauthorized users from changing configuration settings. If you are responsible for maintaining the configuration settings of several computers, you might want to set an administrator password.

  When an administrator password is set, you are prompted to enter a valid password each time you try to access the Setup Utility program. The Setup Utility program cannot be accessed until a valid password is entered.

  If both the power-on password and administrator password are set, you can enter either password. However, you must use your administrator password to change any configuration settings.

- Hard disk password

  Setting a hard disk password prevents unauthorized access to the data on the internal storage drive (such as a hard disk drive). When a hard disk password is set, you are prompted to enter a valid password each time you try to access the storage drive.

  Notes:

  – Even if the storage drive is removed from one computer and installed in another, the hard-disk password is still valid.

  – If the hard disk password is forgotten, there is no way to reset the password or recover data from the storage drive.

Password considerations

A password can be any combination of up to 64 alphabetic and numeric characters. For security reasons, it is recommended to use a strong password that cannot be easily compromised.

Note: The Setup Utility program passwords are case-sensitive.

To set a strong password, consider the following guidelines:

- Have at least eight characters in length
- Contain at least one alphabetic character and one numeric character
- Not be your name or your user name
- Not be a common word or a common name
- Be significantly different from your previous passwords

Setting, changing, or deleting a password

To set, change, or delete a password, do the following:

1. Start the Setup Utility program. See “Starting the Setup Utility program” on page 33.
2. Select **Security**.
3. Depending on the password type, select **Set Power-On Password**, **Set Administrator Password**, or **Hard Disk Password** and press Enter.
4. Follow the instructions on the right side of the screen to set, change, or delete a password.

   Note: A password can be any combination of up to 64 alphabetic and numeric characters. For more information, see “Password considerations” on page 36.
5. To save settings and exit the Setup Utility program, press F10 or Fn+F10 (depending on the keyboard settings). Then, select **Yes** in the window displayed, and press Enter.

Erasing lost or forgotten passwords (clearing CMOS)

This section provides instructions on how to erase lost or forgotten passwords, such as a user password.

Note: The instructions in this section do not apply to the hard disk password.

To erase a lost or forgotten password, do the following:

1. Remove any media from the drives and turn off all connected devices and the computer. Then, disconnect all power cords from electrical outlets and disconnect all cables that are connected to the computer.
2. Remove the computer cover. See Chapter 7 “Hardware removal and installation” on page 53.
3. Locate the Clear Complementary Metal Oxide Semiconductor (CMOS) /Recovery jumper on the system board. See “Hardware locations” on page 1.
4. Move the jumper from the standard position (pin 1 and pin 2) to the maintenance position (pin 2 and pin 3).
5. Reinstall the computer cover and connect the power cord. See Chapter 7 “Hardware removal and installation” on page 53.
6. Turn on the computer and leave it on for approximately 10 seconds. Then, turn off the computer by holding the power button for approximately five seconds.
7. Repeat step 1 and step 2.
8. Move the Clear CMOS /Recovery jumper back to the standard position (pin 1 and pin 2).
9. Reinstall the computer cover and connect the power cord.
10. Turn on the computer and the monitor. When the logo screen is displayed, press F1 or Fn+F1.
11. To prevent data loss, ensure that BIOS settings are restored to an earlier point.

Selecting a startup device

If your computer does not start up from the expected device, you can either change the startup device sequence or select a temporary startup device.

Changing the startup device sequence permanently

To change the startup device sequence permanently, do the following:

1. Depending on the type of the storage device, do one of the following:
   - If the storage device is internal, go to step 2.
   - If the storage device is a disc, ensure that your computer is turned on. Then, insert the disc into the optical drive.
   - If the storage device is an external device other than a disc, connect the storage device to the computer.
2. Start the Setup Utility program. See “Starting the Setup Utility program” on page 33.
3. Select **Startup**.
4. Follow the instructions on the right side of the screen to change the startup device sequence.
5. To save settings and exit the Setup Utility program, press F10 or Fn+F10 (depending on the keyboard settings). Then, select **Yes** in the window displayed, and press Enter.

Selecting a temporary startup device

Note: Not all discs and storage drives are bootable.

To select a temporary startup device, do the following:

1. Depending on the type of the storage device, do one of the following:
   - If the storage device is internal, go to step 2.
   - If the storage device is a disc, ensure that your computer is turned on. Then, insert the disc into the optical drive.
   - If the storage device is an external device other than a disc, connect the storage device to the computer.
2. Turn on or restart the computer. Before Windows starts up, repeatedly press and release F12 or Fn+F12 (depending on the keyboard settings) until Startup Device Menu is displayed.
3. Select the desired storage device and press Enter. The computer then starts up from the device you select.

If you want to select a permanent startup device, select **Enter Setup** on Startup Device Menu and press Enter to start the Setup Utility program. For more information about how to select a permanent startup device, see “Changing the startup device sequence permanently” on page 38.

Exiting the Setup Utility program

To exit the Setup Utility program, do one of the following:

- If you want to save the new settings, press F10 or Fn+F10 (depending on the keyboard settings). Then, select **Yes** in the window displayed and press Enter.
- If you do not want to save the new settings, select **Exit → Discard Changes and Exit** and press Enter. Then, select **Yes** in the window displayed and press Enter.

Updating and recovering the BIOS

The BIOS is the first program that the computer runs when you turn on the computer. The BIOS initializes the hardware components and loads the operating system and other programs.

Updating the BIOS

When you install a new program, hardware device, or device driver, you might be informed to update the BIOS. You can update the BIOS from your operating system or a flash update disc (available only on some models).

To update the BIOS, do the following:

1. Go to https://support.lenovo.com.
2. To update the BIOS from your operating system, download the flash BIOS update driver according to your operating system version. To update the BIOS from a flash update disc, download the ISO image version (used to create a flash update disc). Then, download the installation instructions for the flash BIOS update driver.
3. Print the installation instructions you download and follow the instructions to update the BIOS.

   Note: If you want to update the BIOS from a flash update disc, the installation instructions might not provide the instructions on how to record the update disc. See “Recording a disc” on page 18.

Recovering from a BIOS update failure

To recover from a BIOS update failure, do the following:

1. Remove any media from the drives and turn off all connected devices and the computer. Then, disconnect all power cords from electrical outlets and disconnect all cables that are connected to the computer.
2. Remove the computer cover. See Chapter 7 “Hardware removal and installation” on page 53.
3. Locate the Clear CMOS /Recovery jumper on the system board. See “Hardware locations” on page 1.
4. Remove any parts and cables that impede your access to the Clear CMOS /Recovery jumper.
5. Move the jumper from the standard position (pin 1 and pin 2) to the maintenance position (pin 2 and pin 3).
6. Reinstall the parts and cables that were removed.
7. Reinstall the computer cover and reconnect any cables that were disconnected. See Chapter 7 “Hardware removal and installation” on page 53.
8. Turn on the computer and insert the BIOS update disc into the optical drive. Wait a few minutes. The recovery process begins. After the recovery process is completed, your computer will shut down automatically.

   Note: If the computer does not start up from the disc, select the disc as the startup device. See “Selecting a temporary startup device” on page 38.
9. Repeat steps 1–4.
10. Move the Clear CMOS /Recovery jumper back to the standard position (pin 1 and pin 2).
11. Repeat step 6 and step 7.
12. Turn on the computer and the monitor. When the logo screen is displayed, press F1 or Fn+F1.
13. To prevent data loss, ensure that BIOS settings are restored to an earlier point.

Configuring RAID

This chapter provides information about how to configure Redundant Array of Independent Disks (RAID) for your computer.

An Introduction to RAID

RAID is a technology that provides increased storage functions and reliability through redundancy.

When a group of independent physical storage drives is set up to use RAID technology, they are in a RAID array. This array distributes data across multiple storage drives, but the array appears to the host computer as one single storage unit. Creating and using RAID arrays provides high performance, such as the expedited I/O performance, because several drives can be accessed simultaneously.

RAID drive groups configured according to certain RAID levels also improve data storage reliability and fault tolerance compared with single-drive storage systems. Data loss resulting from a drive failure can be prevented by reconstructing missing data from the remaining drives.

Note: For RAID 0, the missing data resulting from a drive failure cannot be reconstructed.

RAID Level

Your computer must have the minimum number of SATA storage drives installed for the supported level of RAID below:

- RAID 0: striped disk array
  - Consists of at least two SATA storage drives
  - Supported strip size: 4 KB, 8 KB, 16 KB, 32 KB, 64 KB, or 128 KB
  - Better performance without fault tolerance
- RAID 1: mirrored disk array
  - Consists of two SATA storage drives
  - Improved reading performance and 100% redundancy

To install an additional storage drive, refer to “Storage drive cage” on page 84.

Configuring the system BIOS to enable SATA RAID functionality

This section describes how to configure the system BIOS to enable SATA RAID functionality.

Note: Use the arrow keys on the keyboard to make selections.

To enable SATA RAID functionality, do the following:

1. Start the Setup Utility program. See “Starting the Setup Utility program” on page 33.
2. Select **Devices → ATA Drive Setup** and press Enter.
3. Select **Configure SATA as** and press Enter.
4. Select **RAID** and press Enter.
5. Press F10 or Fn+F10 (depending on the keyboard) to save the new settings and exit the Setup Utility program.

Configuring RAID in UEFI mode

This section provides instructions on how to configure RAID in UEFI mode.

Creating RAID volumes in UEFI mode

Attention: All the existing data stored on the selected drives will be erased while the RAID volume is being created.

To create RAID volumes, do the following:

1. Start the Setup Utility program. See “Starting the Setup Utility program” on page 33.
2. Select **Devices → ATA Drive Setup** and press Enter.

3. Select **Intel (R) Rapid Storage Technology** and press Enter.
4. Select **Create RAID Volume** and press Enter.
5. Select **Name** and press Enter. When prompted, type a proper RAID Volume name in the field.
6. Select **RAID Level** and press Enter. When prompted, select a RAID level in the field.
7. Use the arrow keys and the space key to mark individual physical storage drives to be added in the RAID volume.
8. Select **Strip Size** and press Enter. When prompted, select a strip size in the field.
9. Select **Capacity** and type a volume size in the field.
10. Select **Create Volume** and press Enter to initiate volume creation.

Deleting RAID volumes in UEFI mode

Attention: All the existing data stored on the selected drives will be erased after you delete RAID volumes.

To delete RAID volumes, do the following:

1. Start the Setup Utility program. See “Starting the Setup Utility program” on page 33.
2. Select **Devices → ATA Drive Setup** and press Enter.
3. Select **Intel (R) Rapid Storage Technology** and press Enter.
4. Select the RAID volume to be deleted and press Enter.
5. Select **Delete** and press Enter.
6. Select **Yes** to confirm the deletion of the selected RAID volume. Deleting a RAID volume will reset the storage drives to non-RAID.

Resetting storage drives to non-RAID in UEFI mode

To reset your storage drives to non-RAID, do the following:

1. Start the Setup Utility program. See “Starting the Setup Utility program” on page 33.
2. Select **Devices → ATA Drive Setup** and press Enter.
3. Select **Intel (R) Rapid Storage Technology** and press Enter.
4. Select the RAID volumes and press Enter to view the detailed information. Select the storage drives you want to reset to non-RAID and then press Enter.
5. Select **Reset to Non-RAID** and press Enter.
6. Select **Yes** to reset the storage drives to non-RAID.

Configuring RAID in legacy mode

This section provides instructions on how to configure RAID in legacy mode.

Creating RAID volumes in legacy mode

To create RAID volumes, do the following:

1. Press Ctrl+I when prompted to enter the Intel (R) Rapid Storage Technology configuration utility during the computer startup.
2. Use the up and down arrow keys to select **Create RAID Volume** and press Enter.
3. Type a proper RAID Volume name in the **Name** field and press Tab.
4. Use the arrow keys to select a RAID level in the **RAID Level** field and press Tab.
5. If appropriate, use the arrow keys to select a Stripe Size in the **Stripe Size** field and press Tab.
6. Type a volume size in the **Capacity** field and press Tab.

7. Press Enter to initiate volume creation.
8. When prompted, press Y to accept the warning message and create the volume.
9. Return to step 2 to create additional RAID volumes, or select **Exit** and press Enter.
10. Press Y when prompted to confirm the exit.

Deleting RAID volumes in legacy mode

To delete RAID volumes, do the following:

1. Press Ctrl+I when prompted to enter the Intel (R) Rapid Storage Technology configuration utility during the computer startup.
2. Use the up and down arrow keys to select **Delete RAID Volume** and press Enter.
3. Use the arrow keys to select the RAID volume to be deleted and press Delete.
4. When prompted, press Y to confirm the deletion of the selected RAID volume. Deleting a RAID volume will reset the storage drives to non-RAID.

Resetting storage drives to non-RAID in legacy mode

To reset your storage drives to non-RAID, do the following:

1. Press Ctrl+I when prompted to enter the Intel (R) Rapid Storage Technology configuration utility during the computer startup.
2. Use the up and down arrow keys to select **Reset Disks to Non-RAID** and press Enter.
3. Use the arrow keys and the space key to mark individual physical storage drives to be reset, and then press Enter to complete the selection.
4. When prompted, press Y to confirm the reset action.

Chapter 6. Troubleshooting, diagnostics, and recovery

This chapter provides solutions to resolve your computer problems. Follow the steps in the basic procedure for resolving computer problems, which helps you make good use of the troubleshooting, diagnostics, and recovery information.

Basic procedure for resolving computer problems

It is recommended that you use the following procedure to resolve computer problems you are experiencing:

1. Ensure that:
   a. The cables for all connected devices are connected correctly and securely.
   b. All connected devices that require ac power are connected to properly grounded, functioning electrical outlets.
   c. All connected devices are enabled in the BIOS settings of your computer. See “Enabling or disabling a device” on page 33.

   If these actions do not resolve your problem, continue with the next step.
2. Use an antivirus program to see if your computer has been infected by a virus. If the program detects a virus, remove the virus. If the antivirus program does not resolve your problem, continue with the next step.
3. Go to “Troubleshooting” on page 43 and follow the instructions for the type of problem you are experiencing. If these troubleshooting instructions do not resolve your problem, continue with the next step.
4. Recover your operating system. See “Recovery information” on page 51.
5. If none of these actions solve your problem, contact the Lenovo Customer Support Center. For a list of Lenovo Support phone numbers, go to https://pcsupport.lenovo.com/supportphonelist. For more information about help, service, and technical assistance, see Chapter 8 “Getting information, help, and service” on page 93.

Troubleshooting

Attention: Do not open your computer or attempt any repair before reading and understanding the “Read this first: Important safety information” on page iii.

Use the troubleshooting information to find solutions to problems that have definite symptoms.

© Copyright Lenovo 2020

Startup problems

Problem	Solution
The computer does not start up when you press the power button.	• Ensure that the power cord is correctly connected to the rear of the computer and to a working electrical outlet. • If the computer has a secondary power switch on the rear of the computer, ensure that it is switched on. • The power indicator on the front of the computer is on. • The computer voltage matches the voltage available at the electrical outlet for your country or region.
The operating system does not start up from the correct storage drive or fails to start up	• Ensure that all storage drive signal cables and power cables are connected correctly. • Ensure that the storage drive the computer starts up from is listed as the first startup device in UEFI BIOS. • In rare cases, the storage drive with the operating system might get corrupted or damaged. In such cases, you might need to replace the storage drive. • If the computer is installed with an Optane memory: – Ensure that the Optane memory is not removed. – Ensure that the Optane memory is not damaged. Check the Optane memory using diagnostic tools.
The computer beeps multiple times before the operating system starts up.	Ensure that no keys are stuck.

Audio problems

Problem	Solution
The audio cannot be heard on the Windows operating system.	• If you are using powered external speakers that have an On/Off control, ensure that: – The On/Off control is set to the **On** position. – The speaker power cable is connected to a properly grounded, functional ac electrical outlet. • If your external speakers have a volume control, ensure that the volume is not set too low. • Click the volume icon in the Windows notification area on the taskbar. Check the speaker and volume settings. Do not mute the speaker or set the volume at a very low level. • If your computer has a front audio panel, ensure that the volume is not set too low. • Ensure that your external speakers (and headphones, if used) are connected to the correct audio connector on the computer. Most speaker cables are color-coded to match the audio connector. **Note:** When external-speaker or headphone cables are connected to the audio connector, the internal speaker, if present, is disabled. In most cases, if an audio adapter is installed in one of the expansion slots, the audio function built into the system board is disabled. Therefore, you must use the audio connectors on the audio adapter. • Ensure that the program you are running is designed for use in the Microsoft Windows operating system. If the program is designed to run in DOS, the program does not use the Windows sound feature. The program must be configured to use SoundBlaster Pro or SoundBlaster emulation. • Ensure that the audio device drivers are correctly installed.
The sound does not come from the headset or headphones.	1. Exit the application that uses the sound device (for example, Windows Media Player). 2. Right-click the volume icon in the Windows notification area on the taskbar. 3. Click **Playback devices**. 4. Select the headset or headphones, and then click **Set Default**. 5. Click **OK**.
The sound comes from one of the external speakers.	• Ensure that the speaker cable is inserted completely into the connector on the computer. • Ensure that the cable that connects the left speaker to the right speaker is securely connected. • Ensure that the balance settings are set correctly. 1. Right-click the volume icon in the Windows notification area on the taskbar. Then, click **Open Volume Mixer** and select the desired speaker. 2. Click the speaker icon on top of the volume control, and then click the **Levels** tab.

Network problems

Note: The Wi-Fi and Bluetooth features are optional.

Problem	Solution
The computer cannot connect to an Ethernet LAN.	• Connect the cable from the Ethernet connector to the RJ45 connector of the hub. • Enable the Ethernet LAN feature in UEFI BIOS. • Enable the Ethernet LAN adapter. 1. Go to **Control Panel** and view by large icons or small icons. 2. Click **Network and Sharing Center** → **Change adapter settings**. 3. Right-click the Ethernet LAN adapter icon and click **Enable**. • Update or reinstall the Ethernet LAN driver. • Install all networking software that is necessary for your network environment. Check with your LAN administrator for the necessary networking software. • Set the same duplex for the switch port and the adapter. If you configured the adapter for full duplex, ensure that the switch port is also configured for full duplex. Setting a wrong duplex mode might degrade performance, cause data loss, or result in lost connections.
When a Gigabit Ethernet model computer is used at a speed of 1000 Mbps, the Ethernet LAN connection fails or errors occur.	Connect the network cable to the Ethernet connector using Category 5 wiring and a 100 BASE-T hub/switch (not 100 BASE-X).
The Wake On LAN (WOL) feature does not work.	Enable the Wake On LAN feature in UEFI BIOS.
The Wi-Fi feature does not work.	• Enable the Wi-Fi feature in UEFI BIOS. • Enable all Wi-Fi devices. 1. Right-click the **Start** button to open the **Start** context menu. 2. Click **Device Manager**. Type the administrator password or provide confirmation, if prompted. 3. Expand **Network adapters** to display all network devices. 4. Right-click each Wi-Fi device, and then click **Enable device**. • Enable the Wi-Fi feature in Windows Settings. 1. Open the **Start** menu. 2. Click **Settings** → **Network & Internet** → **Wi-Fi**. 3. Enable the Wi-Fi feature. • Update or reinstall the Wi-Fi driver.

Problem	Solution
The Bluetooth feature does not work.	• Enable the Bluetooth feature in UEFI BIOS. • Enable all Bluetooth devices. 1. Right-click the **Start** button to open the **Start** context menu. 2. Click **Device Manager**. Type the administrator password or provide confirmation if prompted. 3. Expand **Bluetooth** to display all Bluetooth devices. Right-click each Bluetooth device, and then click **Enable device**. 4. Expand **Network adapters** to display all network devices. Right-click each Bluetooth device, and then click **Enable device**. • Turn on the Bluetooth radio. 1. Open the **Start** menu. 2. Click **Settings → Devices → Bluetooth & other devices**. 3. Turn on the **Bluetooth** switch to enable the Bluetooth feature. • Update or reinstall the Bluetooth driver.
Sound does not come from the Bluetooth headset or headphones.	1. Exit the application that uses the sound device (for example, Windows Media Player). 2. Right-click the volume icon in the Windows notification area on the taskbar. 3. Click **Playback devices**. 4. If you are using the headset profile, select **Bluetooth Hands-free Audio**, and then click **Set Default**. If you are using the AV profile, select **Stereo Audio**, and then click **Set Default**. 5. Click **OK**.

Performance problems

Problem	Solution
Excessive fragmented files exist on the storage drives.	**Note:** Depending on the volume of the storage drives and amount of data stored on the storage drives, the disk-defragmentation process might take up to several hours. 1. Close any open programs and windows. 2. Open the **Start** menu. 3. Click **Windows System** → **File Explorer** → **This PC**. 4. Right-click your C drive and then click **Properties**. 5. Click the **Tools** tab. 6. Click **Optimize**. Select the drive as desired, and then click **Optimize**. 7. Follow the on-screen instructions.
The free storage drive space is insufficient.	• Clean out your Inbox, Sent Items, and Deleted Items folders from your e-mail application. • Clean up your C drive. 1. Open the **Start** menu. 2. Click **Windows System** → **File Explorer** → **This PC**. 3. Right-click your C drive and then click **Properties**. 4. Check the amount of free space, and then click **Disk Cleanup**. 5. A list of unnecessary file categories is displayed. Select the category you want to delete, and then click **OK**. • Disable some Windows features or remove some unnecessary programs. 1. Go to **Control Panel** and view by large icons or small icons. 2. Click **Programs and Features**. 3. Do one of the following: – To disable some Windows features, click **Turn Windows features on or off**. Follow the on-screen instructions. – To remove some unnecessary programs, select the program you want to remove, and then click **Uninstall/ Change** or **Uninstall**.
The free memory space is insufficient.	• Right-click a blank area on the taskbar and open Task Manager. Then, end some tasks you are not performing. • Install additional memory modules.

Storage drive problems

Problem	Solution
Some or all storage drives are missing from the BIOS menu.	• Ensure that the signal cables and power cables for all the storage drives are connected correctly. • Ensure that the computer is configured correctly to support the storage drives. – If the computer is installed with SATA storage drives, ensure that the SATA storage drive enablement module (one to five storage drives) is installed. – If the computer is installed with SAS storage drives, ensure that the SAS storage drive enablement module (one to five storage drives) or the LSI MegaRAID SAS adapter is installed.

CD or DVD problems

Problem	Solution
A CD or DVD does not work.	• Ensure that the optical drive supports the CD or DVD. • Ensure that the disc is inserted correctly, with its label up. • Ensure that the disc you are using is clean. To remove dust or fingerprints, wipe the disc clean with a soft cloth from the center to the outside. Wiping a disc in a circular motion might cause loss of data. • Ensure that the power cable and signal cable are securely connected to the drive. • Ensure that the disc you are using is not scratched or damaged. Try inserting another disc that you know works. • If you have multiple CD or DVD drives installed (or a combination of CD and DVD drives), try inserting the disc into the other drive. In some cases, only one of the drives is connected to the audio subsystem.
A bootable recovery medium, such as the Product Recovery CD, cannot be used to start your computer.	Ensure that the CD or DVD drive is set as the top priority of the boot priority order in UEFI BIOS. **Note:** On some computer models, the startup sequence is permanently set and cannot be changed.
A black screen is displayed instead of the DVD video.	• Restart the DVD player program. • Try a lower screen resolution or color depth. • Close any open files, and then restart the computer.
A DVD movie does not play.	• Ensure that the disc surface is clean and not scratched. • Check the disc or package for regional coding. You might need to purchase a disc with coding for the region where you are using the computer.
No audio or only an intermittent audio comes out while a DVD movie is playing.	• Check the volume control settings on the computer and on your speakers. • Ensure that the disc surface is clean and not scratched. • Check all cable connections to and from the speakers. • Use the DVD menu for the video to select a different audio track.

Problem	Solution
The playback is slow or choppy.	• Disable any background programs, such as AntiVirus or Desktop Themes. • Ensure that video resolution is less than 1152 x 864 pixels.
A message indicating invalid disc or no disc found is displayed.	• Ensure that the disc is in the drive with the shiny side of the disc facing down. • Ensure that video resolution is less than 1152 x 864 pixels. • Ensure that the DVD or CD is inserted into an appropriate optical drive. For example, do not insert a DVD into a CD-only drive.

Serial connector problems

Problem	Solution
The serial connector cannot be accessed.	• Connect the serial cable from the serial connector on the computer to the serial device. If the serial device has its own power cord, connect the power cord to a grounded electrical outlet. • Turn on the serial device and keep the device online. • Install any programs supplied with the serial device. Refer to the documentation that comes with the serial device for more information. • If you added one serial-connector adapter, ensure that the adapter is installed correctly.

USB device problems

A USB device cannot be accessed.

Solutions:

- Connect the USB cable from the USB connector to the USB device. If the USB device has its own power cord, connect the power cord to a grounded electrical outlet.
- Turn on the USB device and keep the device online.
- Install any device drivers or programs supplied with the USB device. Refer to the documentation that comes with the USB device for more information.
- Disconnect and reconnect the USB connector to reset the USB device.
- Ensure that the Smart USB Protection function is disabled. To configure the Smart USB Protection function, see “Using the Smart USB Protection function” on page 32.

Software problems

Problem	Solution
Some programs do not work as expected.	1. Check whether the problem is caused by a program. a. Ensure that the software is compatible with the computer. Refer to the information supplied with the software for more information. b. Verify that other software works correctly on the computer. c. Verify that the software you are using works on another computer. 2. If the problem is caused by a program: • Refer to the printed documentation that comes with the program or the help system of the program. • Update the program. • Uninstall the program and then reinstall it. To download a program that is preinstalled on your computer, go to https://support.lenovo.com and follow the on-screen instructions.

Diagnosing problems

Many computer problems can be solved without outside assistance. If you experience a problem with your computer, the first place to start is the troubleshooting information in your computer documentation. If you suspect a software problem, see the documentation, including readme files and help information systems, that come with the operating system or program. ThinkStation computers come with the Lenovo Vantage program that you can use to help you identify hardware problems.

Diagnosing problems with Lenovo Vantage

Lenovo Vantage is preinstalled on your computer and is ready to run.

Note: If you are unable to isolate and repair the problem yourself after running Lenovo Vantage, save and print the log files created by the program. You need the log files when you speak to a Lenovo technical support representative.

Lenovo Vantage supports the hardware scan function. It combines diagnostic tests, system information collection, security status, and support information, along with hints and tips for optimal system performance.

The troubleshooting information or the diagnostic programs might tell you that you need additional or updated device drivers or other software. You can get the latest technical information and download device drivers and updates from the Lenovo Support Web site at:
https://support.lenovo.com

Recovery information

This section provides instructions on how to recover your operating system.

Note: If a device does not work correctly after recovering the operating system, update the device driver. See “Keeping your computer current” on page 22.

To recover your Windows 10 operating system, use the following solutions:

- Use Windows recovery solutions.

- Use recovery solutions in Windows Settings.
  1. Click the Start button to open the Start menu.
  2. Click **Settings → Update & Security → Recovery**.
  3. Follow the instructions on the screen to choose the appropriate recovery solution.
- Use System Restore to restore system files and settings to an earlier point.
  1. Click the Start button to open the Start menu.
  2. Click **Windows System → Control Panel**.
  3. View Control Panel by Large icons or Small icons, and then click **Recovery → Open System Restore**.
  4. Follow the instructions on the screen.
- Use the File History tool to restore your files from a backup.

  Note: If you use the File History tool to restore your files from a backup, ensure that you backed up your data earlier with the tool.
  1. Click the Start button to open the Start menu.
  2. Click **Windows System → Control Panel**.
  3. View Control Panel by Large icons or Small icons, and then click **File History → Restore personal files**.
  4. Follow the instructions on the screen.
- Use the Windows recovery environment by doing one of the following:
  - After several consecutive failed boot attempts, the Windows recovery environment might start automatically. Follow the instructions on the screen to choose the appropriate recovery solution.
  - Select the recovery medium you created earlier with the Windows tool as the startup device. See “Selecting a temporary startup device” on page 38. Then, follow the instructions on the screen to choose the appropriate recovery solution.

- Use the recovery USB key provided by Lenovo to restore the entire storage drive to the factory-default settings.
  - If your computer comes with the recovery USB key, follow the instructions shipped with the USB key.
  - If your computer does not come with the recovery USB key, contact the Lenovo Customer Support Center to order a recovery USB key. See “Calling for service” on page 94.

Chapter 7. Hardware removal and installation

This chapter provides instructions on how to remove and install hardware for your computer.

Customer Replaceable Units

Customer Replaceable Units (CRUs) are parts that can be upgraded or replaced by the customer. ThinkStation computers contain the following types of CRUs:

- **Self-service CRUs:** Refer to parts that can be installed or replaced easily by customer themselves or by trained service technicians at an additional cost.
- **Optional-service CRUs:** Refer to parts that can be installed or replaced by customers with a greater skill level. Trained service technicians can also provide service to install or replace the parts under the type of warranty designated for the customer's machine.

If you intend on installing the CRU, Lenovo will ship the CRU to you. CRU information and replacement instructions are shipped with your product and are available from Lenovo at any time upon request. You might be required to return the defective part that is replaced by the CRU. When return is required: (1) return instructions, a prepaid shipping label, and a container will be included with the replacement CRU; and (2) you might be charged for the replacement CRU if Lenovo does not receive the defective CRU within thirty (30) days of your receipt of the replacement CRU. See your Lenovo Limited Warranty documentation at https://www.lenovo.com/warranty/llw_02 for full details.

For the CRU information of your computer, refer to the following list.

Self-service CRUs

- Computer cover
- Coin-cell battery
- Cover presence switch
- Front bezel
- Heat sink for the M.2 solid-state drive (available on some models)
- Keyboard (available on some models)
- Memory module (vary by computer model)
- Mouse (available on some models)
- M.2 solid-state drive (available on some models)
- PCIe card (vary by computer model)
- Plastic holder (available on some models)
- Power cord
- Slim optical drive (available on some models)
- Storage drives (vary by computer model)
- Storage drive cage (available on some models)

Optional-service CRUs

- E-lock
- Power supply assembly

© Copyright Lenovo 2020

Handling static-sensitive devices

Do not open the static-protective package containing the new part until the defective part has been removed and you are ready to install the new part. Static electricity, although harmless to you, can seriously damage computer components and options.

When you handle options and other computer components, take these precautions to avoid static-electricity damage:

- Limit your movement. Movement can cause static electricity to build up around you.
- Always handle options and other computer components carefully. Handle PCI/PCIe cards, memory modules, system boards, and microprocessors by the edges. Never touch any exposed circuitry.
- Prevent others from touching the options and other computer components.
- Touch the static-protective package containing the part to a metal expansion-slot cover or other unpainted metal surface on the computer for at least two seconds. This reduces static electricity from the package and your body before you install or replace a new part.
- When possible, remove the new part from the static-protective package, and install it directly in the computer without setting the part down. When this is not possible, place the static-protective package on a smooth, level surface and place the part on the package.
- Do not place the part on the computer cover or other metal surface.

Preparing your computer

Attention: Do not open your computer or attempt any repair before reading and understanding the “Read this first: Important safety information” on page iii.

CAUTION:



Avoid contact with hot components inside the computer. During operation, some components become hot enough to burn the skin. Before you open the computer cover, turn off the computer, disconnect power, and wait approximately 10 minutes for the components to cool.

Before installing or removing any hardware component in your computer, do the following to prepare your computer:

1. Remove any media from the drives and turn off all attached devices and the computer. Then, disconnect all power cords from electrical outlets and disconnect all cables that are connected to the computer.
2. Unlock any locking device that secures the computer cover. See “Locking your computer” on page 27.
3. Lay the computer on its side for easier access to the system board.

4. Remove the two screws that secure the computer cover. Then slide the cover to the rear of the computer to remove the cover.

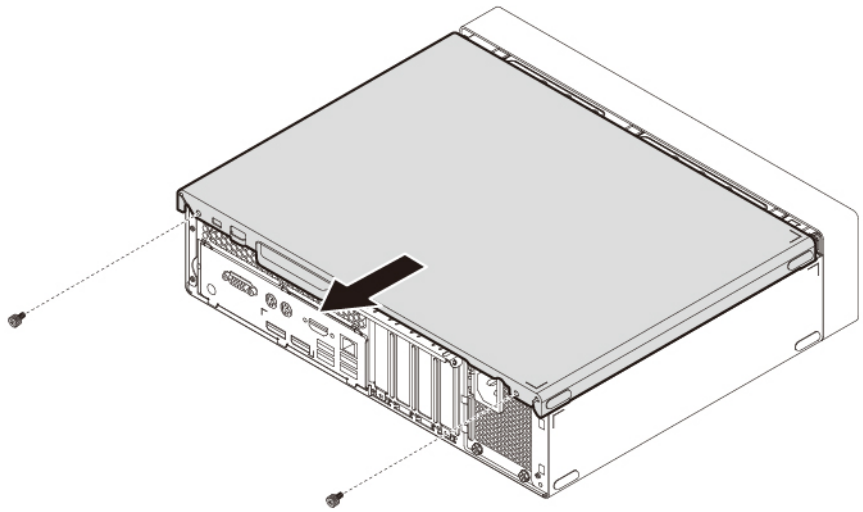

Figure 11. Removing the computer cover

5. Release the three plastic tabs of the front bezel and pivot the front bezel outward to remove it from the computer.

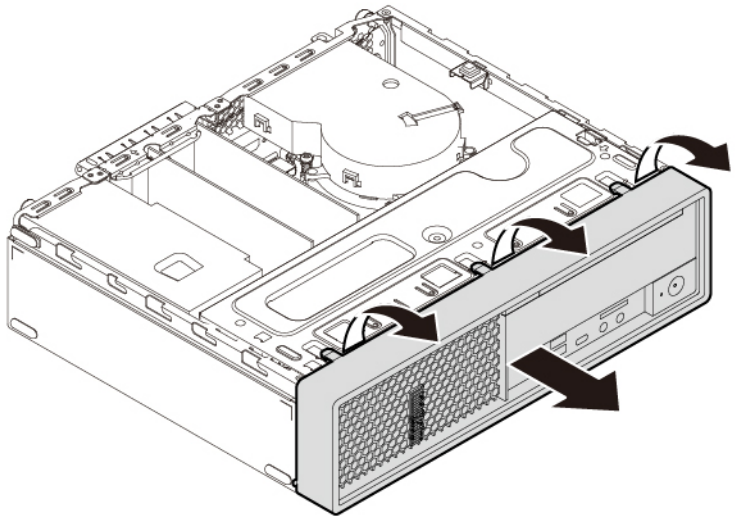

Figure 12. Removing the front bezel

6. Press the release tab a as shown and pivot the drive bay assembly upward to open the drive bay assembly.

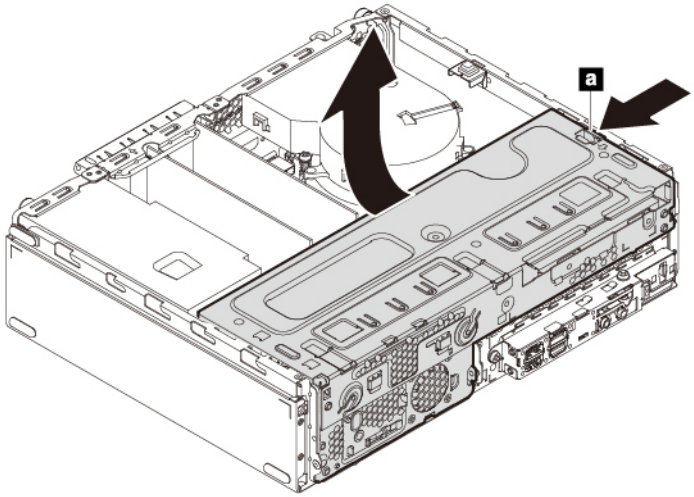

Figure 13. Opening the drive bay assembly

Notes:

- Depending on your computer model, some of the hardware parts in the removal and installation section might not be available.
- Use computer parts provided only by Lenovo.
- When removing or installing an option, use the appropriate instructions in this section along with the instructions that come with the option.
- In most areas of the world, Lenovo requires the return of the defective CRU. Information about this will come with the CRU or will come a few days after the CRU arrives.

Removing and installing hardware

This section provides instructions on how to remove and install hardware for your computer. You can expand the capabilities of your computer and maintain your computer by removing or installing hardware.

Attention: Do not open your computer or attempt any repair before reading and understanding the “Read this first: Important safety information” on page iii.

External options

You can connect external options to your computer, such as external speakers, a printer, or a scanner. For some external options, you must install additional software in addition to making the physical connection. When installing an external option, see “Hardware locations” on page 1 to identify the required connector. Then, use the instructions that come with the option to help you make the connection and install any required software or device drivers.

PCIe card

Attention: Do not open your computer or attempt any repair before reading and understanding the “Read this first: Important safety information” on page iii.

Your computer has one PCIe x1 card slot, one PCIe x16 card slot (negotiable link width x4), and one PCIe x16 graphics card slot (graphics card available on some models).

To remove or install a PCIe card, do the following:

1. Prepare your computer. See “Preparing your computer” on page 54.
2. Locate the PCIe card slot. See “Parts on the system board” on page 6.
3. If the PCIe card is installed in a PCIe x16 card slot, pivot the retaining latch a as shown to the open position.

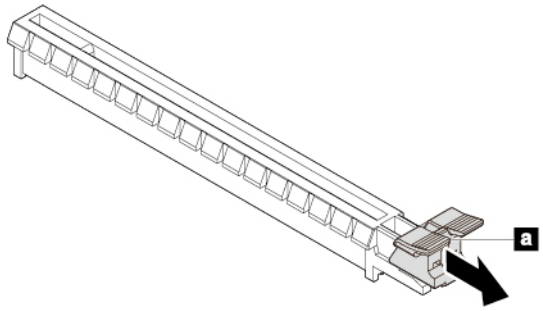

Figure 14. Disengaging the card retaining latch

4. Rotate the PCIe card retainer to the open position. Then grasp the card and gently pull it out of the slot.

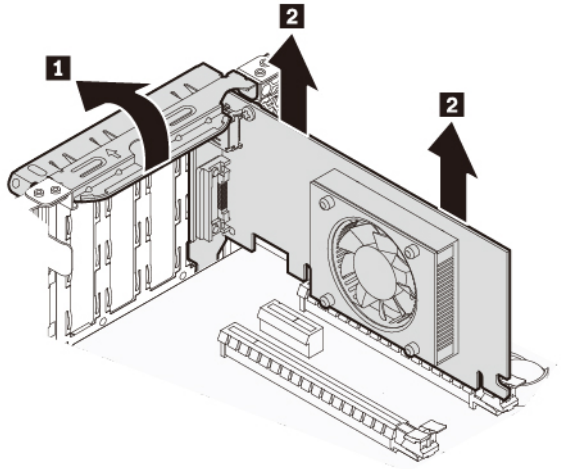

Figure 15. Removing a PCIe card

Notes:

- If the card is connected to other device, disconnect the cables from the card.
- The card fits tightly into the slot. If necessary, alternately move each side of the card a small amount until the card is removed from the slot.

5. To install a PCIe card, do the following:
   a. Remove the new PCIe card from its static-protective package.

b. If necessary, remove the appropriate metal slot cover on the rear of the chassis and pivot the card retaining clip to the open position.

c. Install the new card into the card slot on the system board until it is securely seated. See “Parts on the system board” on page 6. Then rotate the PCIe card retainer to the closed position.

Note: If you are installing a PCIe x16 graphics card, ensure that the card retaining clip is in the closed position before you rotate the PCIe card retainer to the closed position.

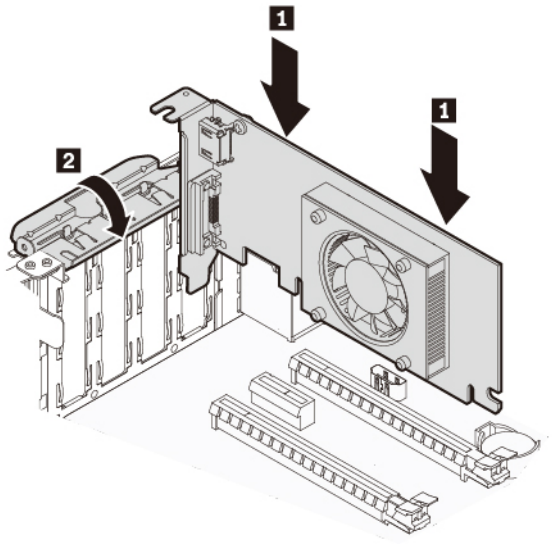

Figure 16. Installing a PCIe card

What to do next:

- To work with another piece of hardware, go to the appropriate section.
- To complete the installation or replacement, go to “Completing the parts replacement” on page 89.

M.2 solid-state drive

Attention: Do not open your computer or attempt any repair before reading and understanding the “Read this first: Important safety information” on page iii.

The instructions on how to install or replace a M.2 solid-state drive also apply to the Intel Optane memory. Before replacing the Intel Optane memory, ensure that you disable the Intel Optane memory from the Intel Rapid Storage Technology (Intel RST) Console. Otherwise, all data on the storage drive will be lost. For more information, see instructions on https://www.intel.com/content/www/us/en/support/articles/000023989/memory-and-storage/intel-optane-memory.html.

An M.2 solid-state drive can be installed on the system board or an M.2 solid-state drive PCIe adapter.

M.2 solid-state drive on the system board

To remove or install an M.2 solid-state drive on the system board, do the following:

1. Prepare your computer. See “Preparing your computer” on page 54.
2. Locate the M.2 solid-state drive slot. See “Parts on the system board” on page 6.
3. Untie the cables that prevent your access to the M.2 solid-state drive slot from the cable clip.
4. To remove an M.2 solid-state drive, do the following:

a. Turn the two mounting studs 90-degree counterclockwise to release the heat sink. Then, lift the heat sink off the plastic holder.

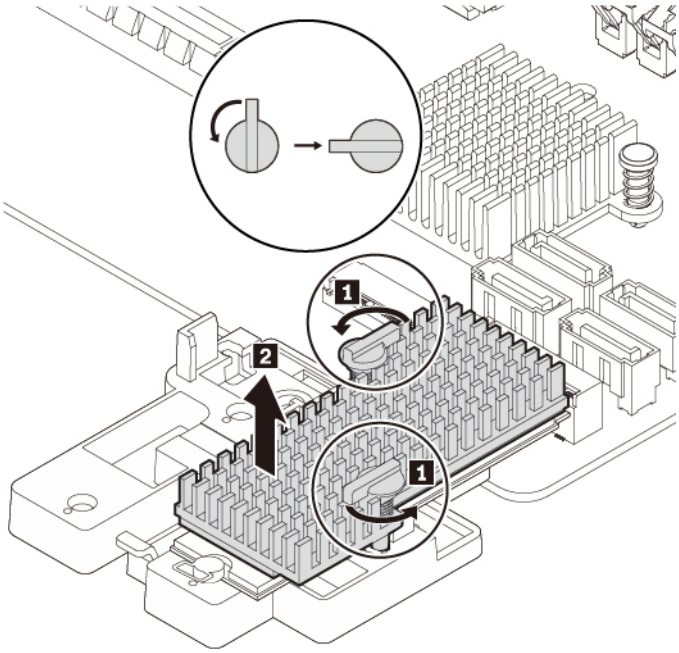

Figure 17. Removing the heat sink from the plastic holder

b. Pull the handle of the retaining latch outward to the open position. The M.2 solid-state drive is released from the secured position and pivots upward. Remove the M.2 solid-state drive out of the slot.

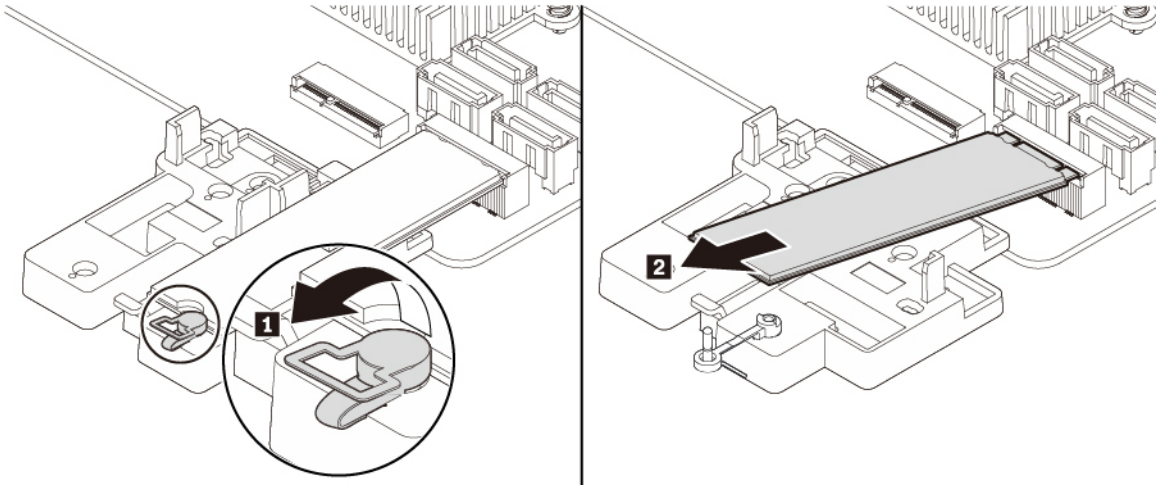

Figure 18. Opening the retaining latch and removing the M.2 solid-state drive

5. To install a new M.2 solid-state drive, do the following:

a. If necessary, align the four tabs on the rear of the plastic holder with the corresponding holes in the chassis. Then slide the plastic holder toward the system board until it snaps into position.

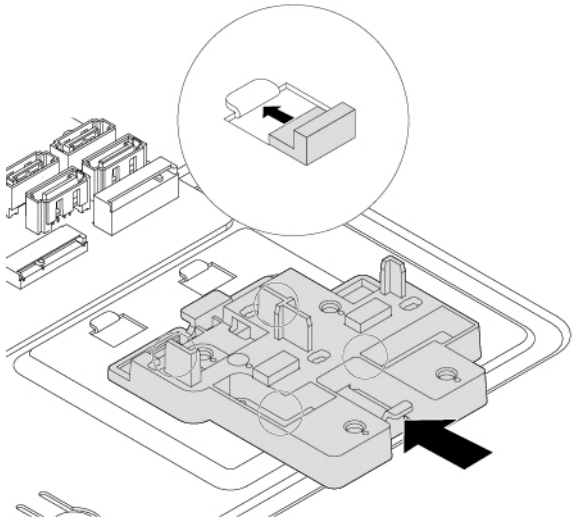

Figure 19. Installing the plastic holder

b. Locate the hole in the plastic holder to install the retaining latch. Align the pin **a** with the corresponding hole **b** in the plastic holder. Then press the retaining latch downward into the hole until it snaps into position.

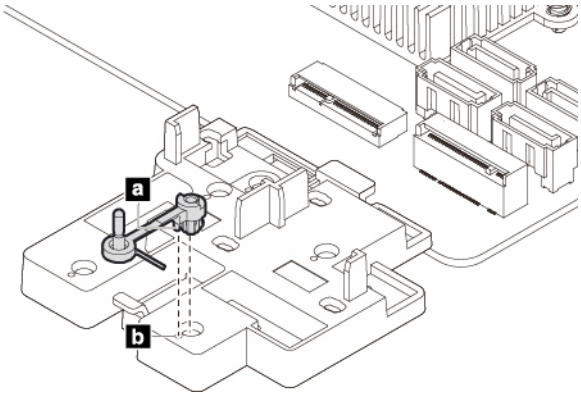

Figure 20. Installing the retaining latch

c. Hold the new M.2 solid-state drive by its edges and ensure that the circuit board side is facing upward. Align the contact edge of the new drive with the key in the corresponding slot. Then carefully insert the new drive into the slot at an angle of about 20 degrees and pivot the new drive downward. Insert the plug of the retaining latch into the hole to secure the new drive.

Note: Do not touch the circuit board or the contact edge of the M.2 solid-state drive.

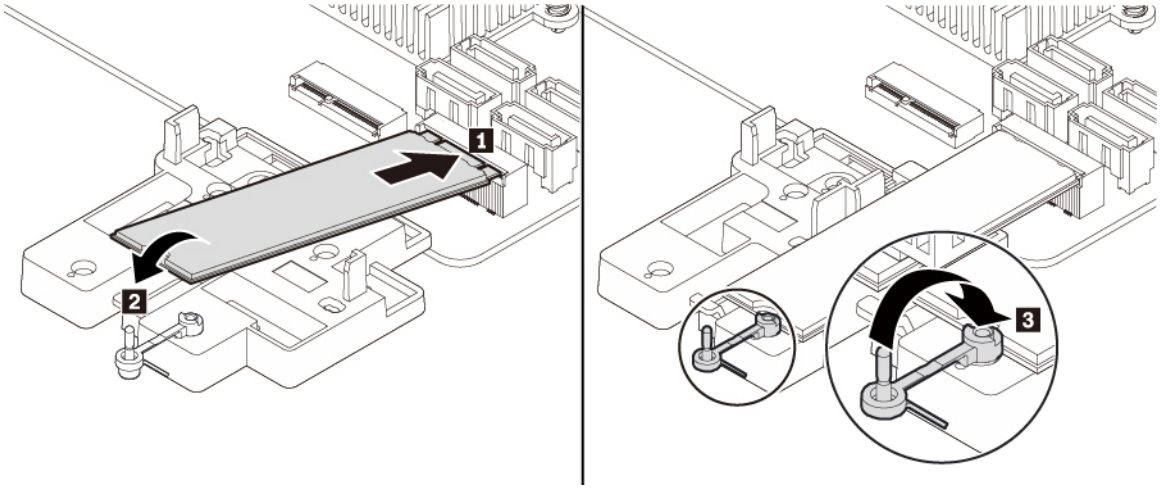

Figure 21. Installing the M.2 solid-state drive

6. If necessary, remove the film that covers the thermal pad at the bottom of the heat sink. Place the heat sink on the M.2 solid-state drive. Ensure that the two mounting studs on the heat sink are in the open position and press the studs on the heat sink into the corresponding holes in the plastic holder as shown. Then, turn the mounting studs 90-degree clockwise to secure the heat sink to the plastic holder.

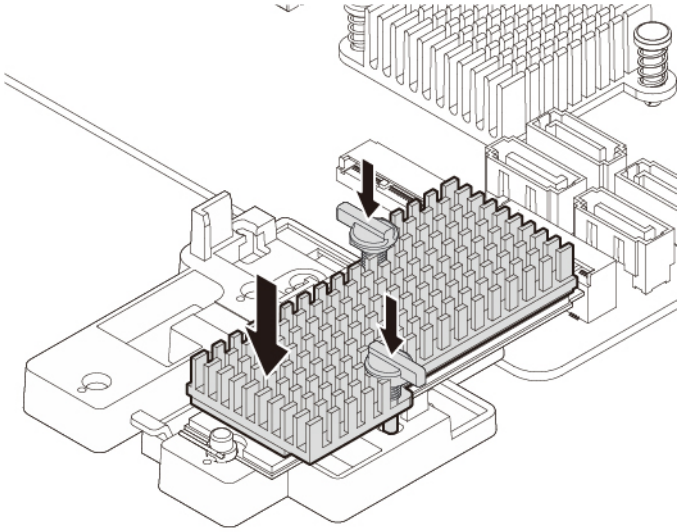

Figure 22. Installing the heat sink onto the plastic holder

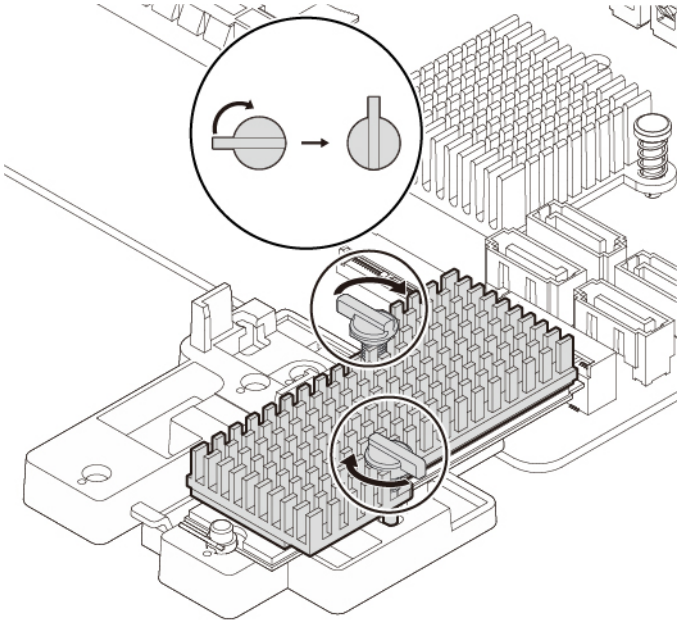

Figure 23. Securing the heat sink to the plastic holder

7. Retie the cables that you have untied with the cable clip.

What to do next:

- To work with another piece of hardware, go to the appropriate section.

- To complete the installation or replacement, go to “Completing the parts replacement” on page 89.

M.2 solid-state drive in an M.2 solid-state drive PCIe adapter

To remove or install the M.2 solid-state drive in the M.2 solid-state drive PCIe adapter, do the following:

1. Prepare your computer. See “Preparing your computer” on page 54.
2. To remove the M.2 solid-state drive in the M.2 solid-state drive PCIe adapter, do the following:
   a. Locate and remove the M.2 solid-state drive adapter from the PCIe card slot. See “PCIe card” on page 56.
   b. The heat sink is secured by two mounting studs. Pinch the clips of the studs inward 1 and push the studs upward 2 to release the heat sink. Then, lift the heat sink off the M.2 solid-state drive adapter 3.

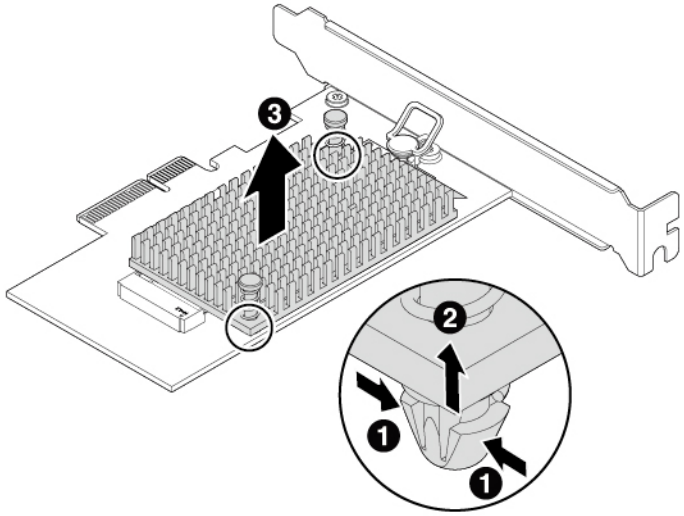

Figure 24. Removing the heat sink from the M.2 solid-state drive adapter

   c. The M.2 solid-state drive is secured by a retaining latch. Pull the handle of the retaining latch outward to release the M.2 solid-state drive. Then, gently pull the M.2 solid-state drive out of the M.2 slot.

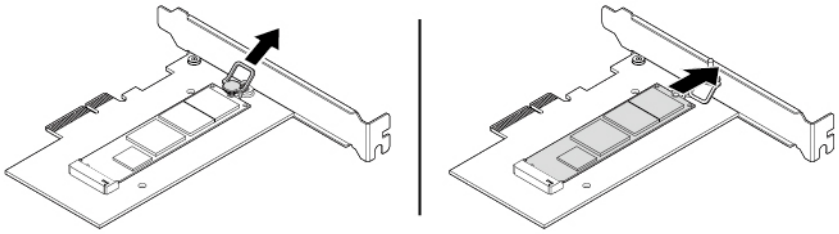

Figure 25. Removing the M.2 solid-state drive

3. To install the M.2 solid-state drive, do the following:

a. Ensure that a thermal pad is placed in position on the M.2 solid-state drive adapter.

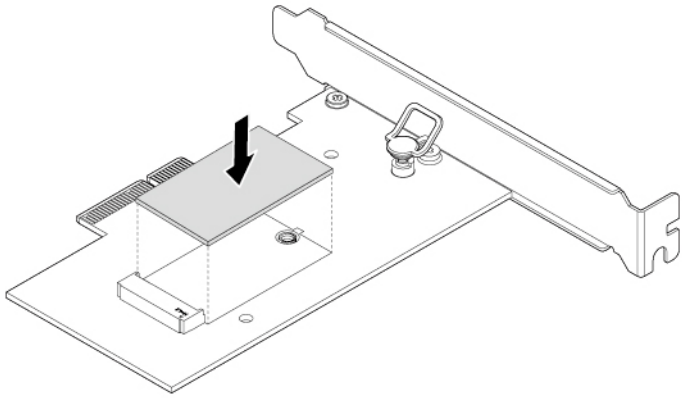

Figure 26. Installing the thermal pad

b. Pull outward the handle of the retaining latch in the M.2 solid-state drive adapter.
c. Insert the new M.2 solid-state drive into the M.2 slot. Then, insert the plug of the retaining latch into the hole to secure the new drive.

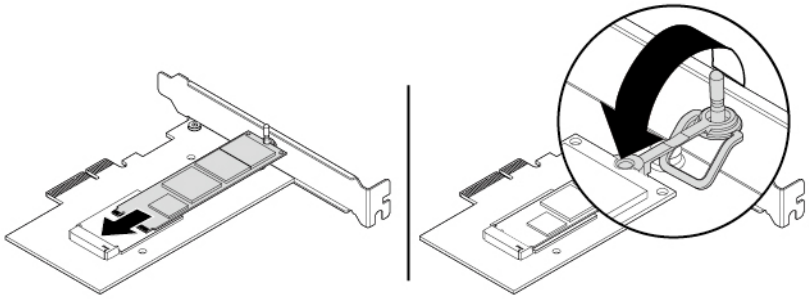

Figure 27. Installing the M.2 solid-state drive

d. Position the heat sink on the M.2 solid-state drive adapter. Ensure that the two mounting studs in the heat sink are aligned with the holes in the M.2 solid-state drive adapter. Then, push the mounting studs downward to secure the heat sink to the adapter.

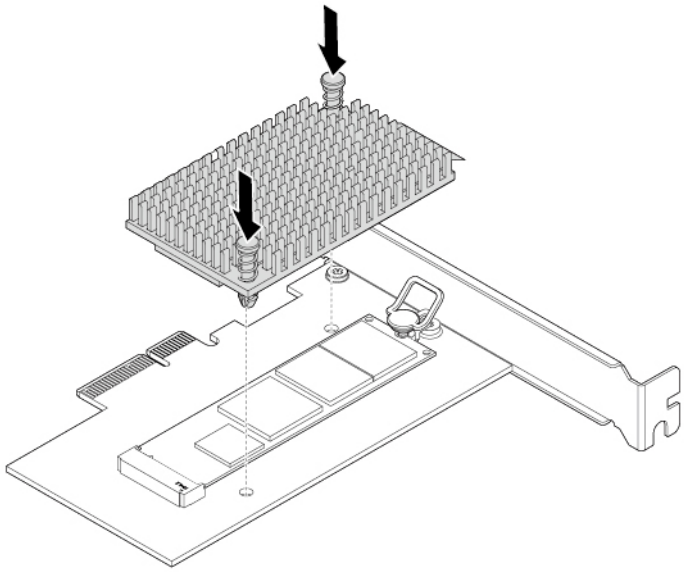

Figure 28. Installing the heat sink

e. Install the M.2 solid-state drive adapter into the appropriate PCIe card slot on the system board. See “PCIe card” on page 56.

Note: It is recommended that you install the M.2 solid-state drive adapter into the PCIe x16 card slot. See “Parts on the system board” on page 6.

What to do next:

- To work with another piece of hardware, go to the appropriate section.
- To complete the installation or replacement, go to “Completing the parts replacement” on page 89.

Memory module

Attention: Do not open your computer or attempt any repair before reading and understanding the “Read this first: Important safety information” on page iii.

Your computer has four memory slots for installing or replacing DDR4 UDIMMs. When installing or replacing a memory module, use the following guidelines:

- Use any of DDR4 ECC UDIMMs or DDR4 non-ECC UDIMMs for your computer. Do not install the ECC or non-ECC UDIMMs into the same computer.
- The ECC memory modules are not supported on the computer models with Intel Core i5 or i7 microprocessors.
- Use 4 GB, 8 GB, 16 GB, or 32 GB non-ECC UDIMMs in any combination up to a maximum of 128 GB system memory.
- Use 8 GB or 16 GB ECC UDIMMs in any combination up to a maximum of 64 GB system memory.

- Install memory modules in the alphabetic order as shown.

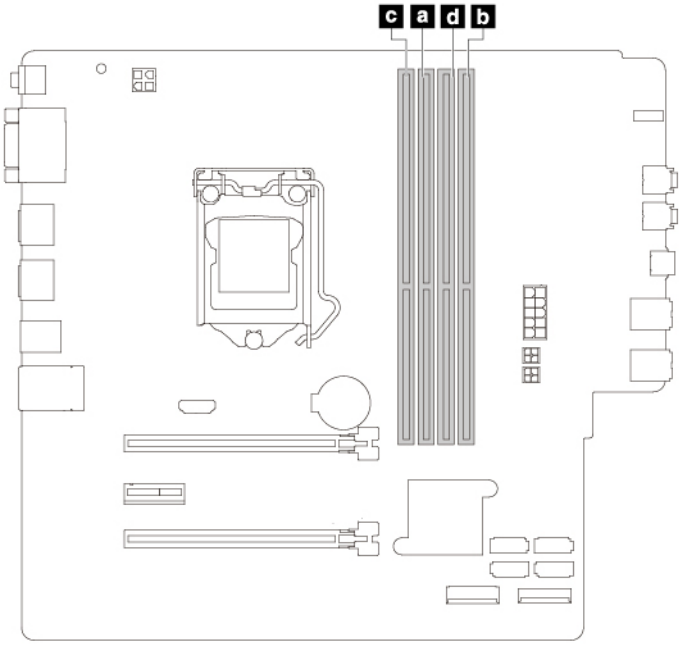

Figure 29. Memory module installation sequence

To remove or install a memory module, do the following:

1. Prepare your computer. See “Preparing your computer” on page 54.
2. Locate the memory slots. See “Parts on the system board” on page 6.
3. Remove any parts that might prevent your access to the memory slots. Depending on your computer model, you might need to remove the PCIe x16 graphics card for easier access to the memory slots. See “PCIe card” on page 56.
4. To remove a memory module, open the retaining clips and gently pull the memory module out of the memory slot.

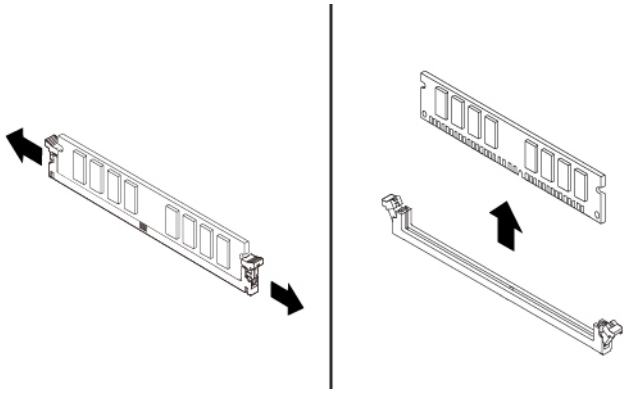

Figure 30. Removing a memory module

5. To install a memory module, do the following:

a. Open the retaining clips of the memory slot.

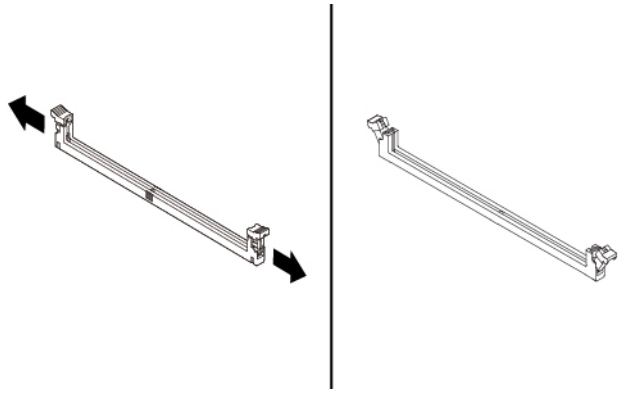

Figure 31. Opening the retaining clips

b. Position the new memory module over the memory slot. Ensure that the notch 1 on the memory module is aligned with the key 2 in the slot. Push the memory module straight down into the slot until the retaining clips completely close.

Note: Do not touch the circuit board or the contact edge of the memory module.

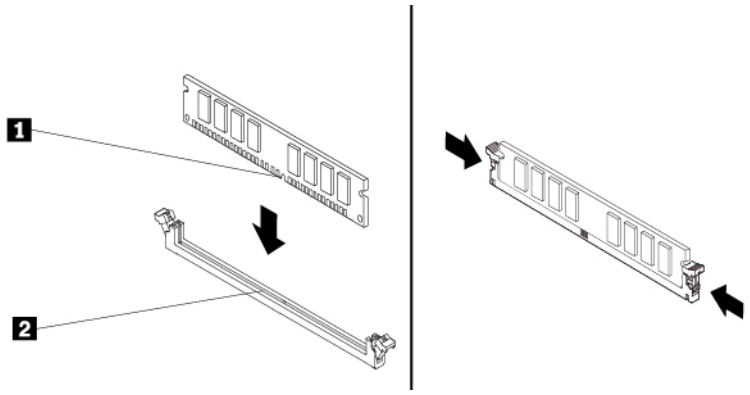

Figure 32. Installing a memory module

6. Reinstall the PCIe x16 graphics card if you have removed it.

What to do next:

- To work with another piece of hardware, go to the appropriate section.
- To complete the installation or replacement, go to “Completing the parts replacement” on page 89.

Slim optical drive

Attention: Do not open your computer or attempt any repair before reading and understanding the “Read this first: Important safety information” on page iii.

To remove or install a slim optical drive, do the following:

1. Remove the computer cover and the front bezel for access to the slim optical drive. See “Preparing your computer” on page 54.
2. To remove a slim optical drive, do the following:

a. Disconnect cables from the rear of the slim optical drive, press the release button a, and then slide the slim optical drive from the front of the chassis.

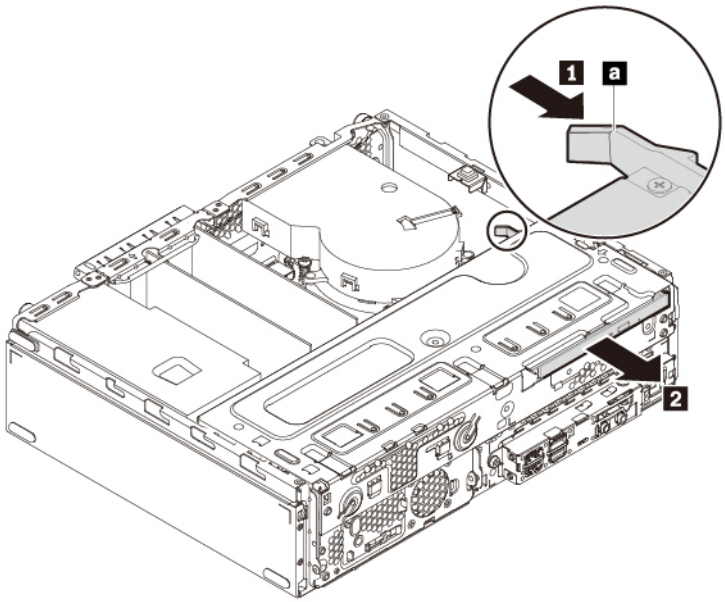

Figure 33. Removing the slim optical drive

b. Detach the bracket as shown to remove it from the slim optical drive.

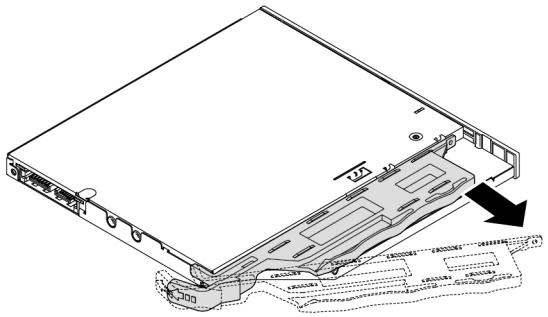

Figure 34. Removing the bracket from the slim optical drive

3. To install a new slim optical drive, do the following:

a. If a plastic shield is installed in the front bezel, remove the plastic shield as shown.

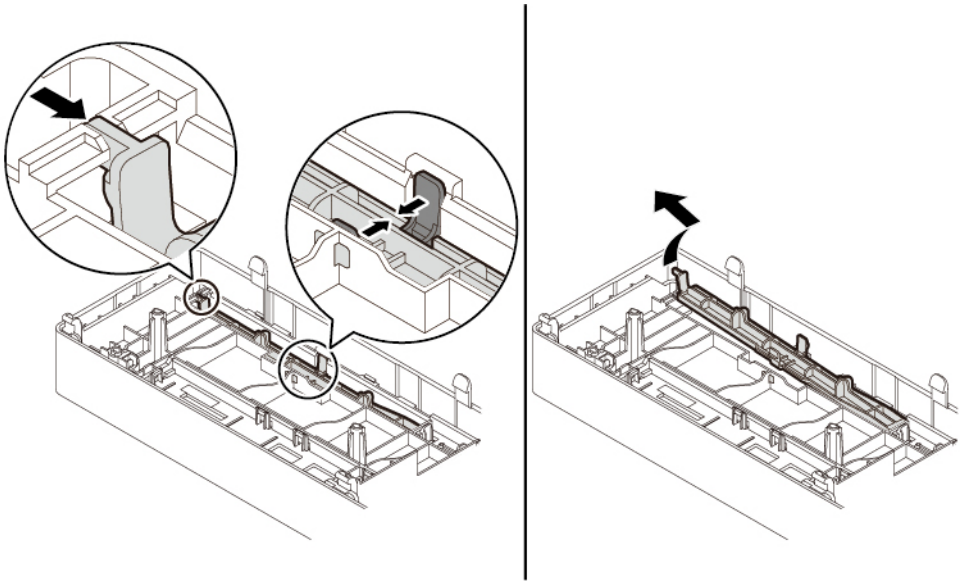

Figure 35. Removing the plastic shield

b. If a metal shield is installed in the slim optical drive bay, remove the metal shield as shown.

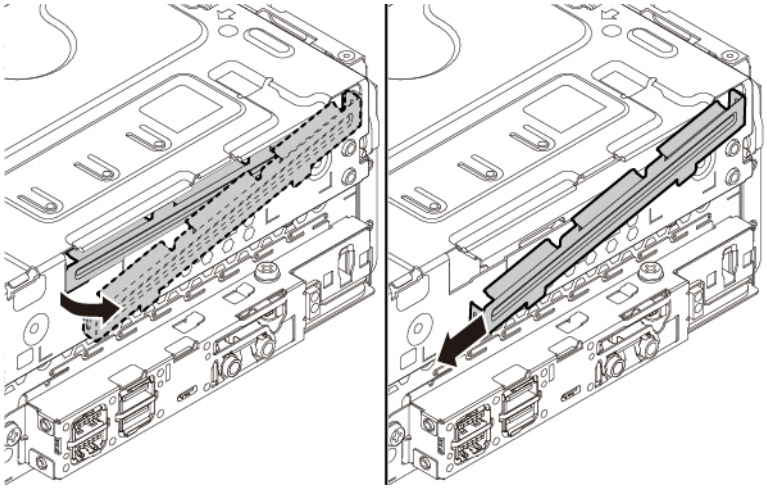

Figure 36. Removing the metal shield

c. Align the three tabs on the bracket with the corresponding holes in the new slim optical drive. Then, install the bracket to the new slim optical drive.

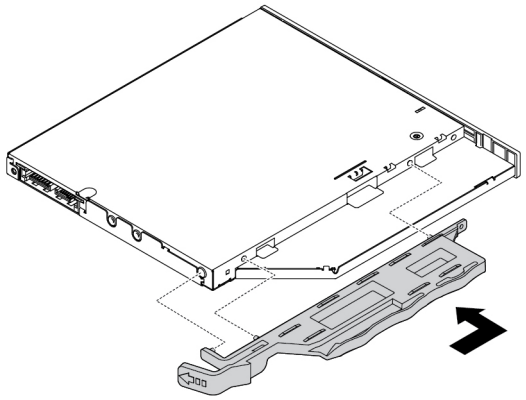

Figure 37. Installing the bracket to the new slim optical drive

d. Insert the new slim optical drive into the chassis until you hear a click. The slim optical drive is secured in place.

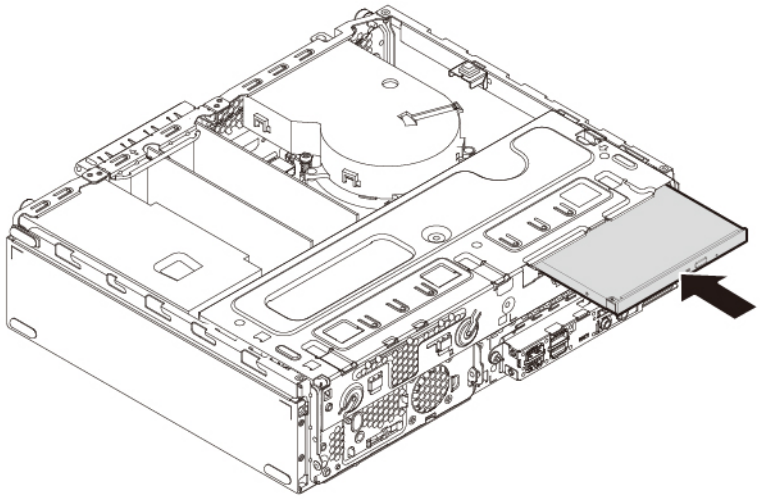

Figure 38. Installing the slim optical drive

What to do next:

- To work with another piece of hardware, go to the appropriate section.
- To complete the installation or replacement, go to “Completing the parts replacement” on page 89.

Coin-cell battery

Attention: Do not open your computer or attempt any repair before reading and understanding the “Read this first: Important safety information” on page iii.

Your computer has a special type of memory that maintains the date, time, and settings for built-in features, such as parallel-connector assignments (configuration). A coin-cell battery keeps this information active when you turn off the computer.

The coin-cell battery normally requires no charging or maintenance throughout its life; however, no battery lasts forever. If the coin-cell battery fails, the date and time information is lost.

Refer to the “Lithium coin-cell battery notice” in the *Safety and Warranty Guide* for information about disposing of the coin-cell battery.

To remove and install the coin-cell battery, do the following:

1. Prepare your computer. See “Preparing your computer” on page 54.
2. Locate the coin-cell battery. See “Parts on the system board” on page 6.
3. Remove any PCIe cards that might prevent your access to the coin-cell battery. See “PCIe card” on page 56.
4. Remove the old coin-cell battery as shown.

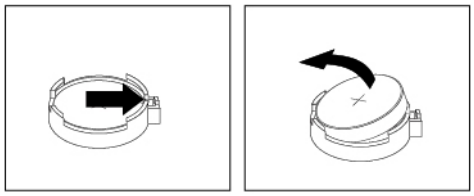

Figure 39. Removing the coin-cell battery

5. Install the new coin-cell battery as shown.

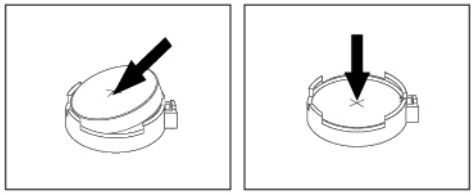

Figure 40. Installing the coin-cell battery

6. Reinstall the PCIe cards if you have removed them. See “PCIe card” on page 56.
7. Close the drive bay assembly and reinstall the front bezel. Then, reinstall the computer cover and reconnect the cables. See “Completing the parts replacement” on page 89.

   Note: When the computer is turned on for the first time after the coin-cell battery is replaced, an error message might be displayed. This is normal after the coin-cell battery is replaced.
8. Turn on the computer and all attached devices.
9. Use the Setup Utility program to set the date and time. See “Using the Setup Utility program” on page 33.

What to do next:

- To work with another piece of hardware, go to the appropriate section.
- To complete the installation or replacement, go to “Completing the parts replacement” on page 89.

Cover presence switch

Attention: Do not open your computer or attempt any repair before reading and understanding the “Read this first: Important safety information” on page iii.

To remove or install the cover presence switch, do the following:

1. Remove the computer cover. See “Preparing your computer” on page 54.
2. Locate the cover presence switch. See “Computer components” on page 5.
3. To remove the cover presence switch, do the following:
   a. Disconnect the cover presence switch cable from the cover presence switch connector on the system board. See “Parts on the system board” on page 6.
   b. Remove the screw that secures the cover presence switch and remove the cover presence switch from the chassis.

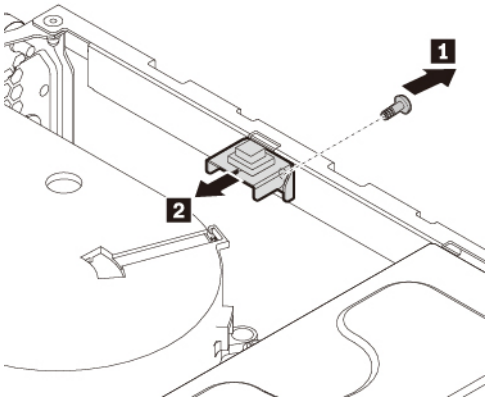

Figure 41. Removing the cover presence switch

4. To install the cover presence switch, do the following:
   a. Align the screw hole in the cover presence switch with the corresponding hole in the chassis. Then install the screw to secure the cover presence switch to the chassis.

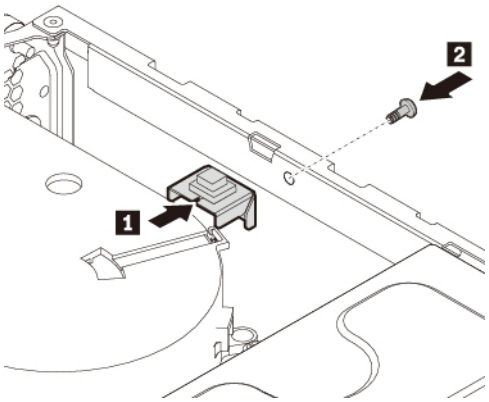

Figure 42. Installing the cover presence switch

   b. Connect the cover presence switch cable to the cover presence switch connector on the system board. See “Parts on the system board” on page 6.

What to do next:

- To work with another piece of hardware, go to the appropriate section.
- To complete the installation or replacement, go to “Completing the parts replacement” on page 89.

Power supply assembly

Attention: Do not open your computer or attempt any repair before reading and understanding the “Read this first: Important safety information” on page iii.

Although there are no moving parts in your computer after the power cord has been disconnected, the following warnings are required for your safety and proper Underwriters Laboratories (UL) certification.

CAUTION:



Keep fingers and other parts of your body away from hazardous, moving parts. If you suffer an injury, seek medical care immediately.



DANGER



Disconnect all power cords from electrical outlets before removing the computer cover or any part that has the above label attached.

To remove and install the power supply assembly, do the following:

1. Prepare your computer. See “Preparing your computer” on page 54.
2. To remove the power supply assembly, do the following:
   a. Disconnect the power supply assembly cables from the system board and all drives. See “Parts on the system board” on page 6.
   b. Release the power supply assembly cables from the cable clips and ties.

c. Remove the three screws at the rear of the chassis that secure the power supply assembly. Press the power supply clip a downward to release the power supply assembly. Then slide the power supply assembly to the front of the computer and lift it out of the chassis.

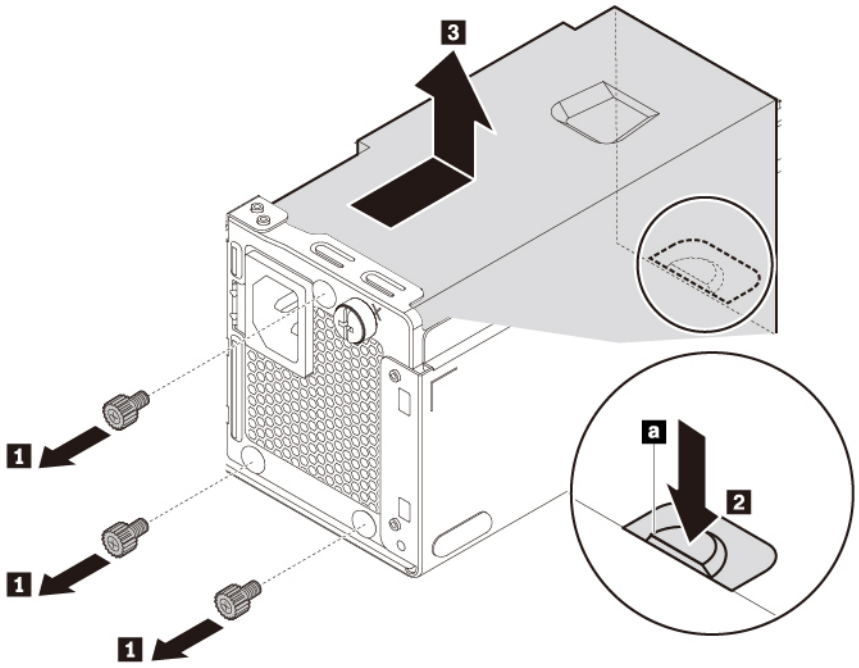

Figure 43. Removing the power supply assembly

3. To install the power supply assembly, do the following:
   a. Ensure that the new power supply assembly is the correct replacement.

b. Install the new power supply assembly into the chassis so that the screw holes in the power supply assembly align with those in the chassis. Install and tighten the three screws to secure the power supply assembly.

   Note: Use only screws provided by Lenovo.

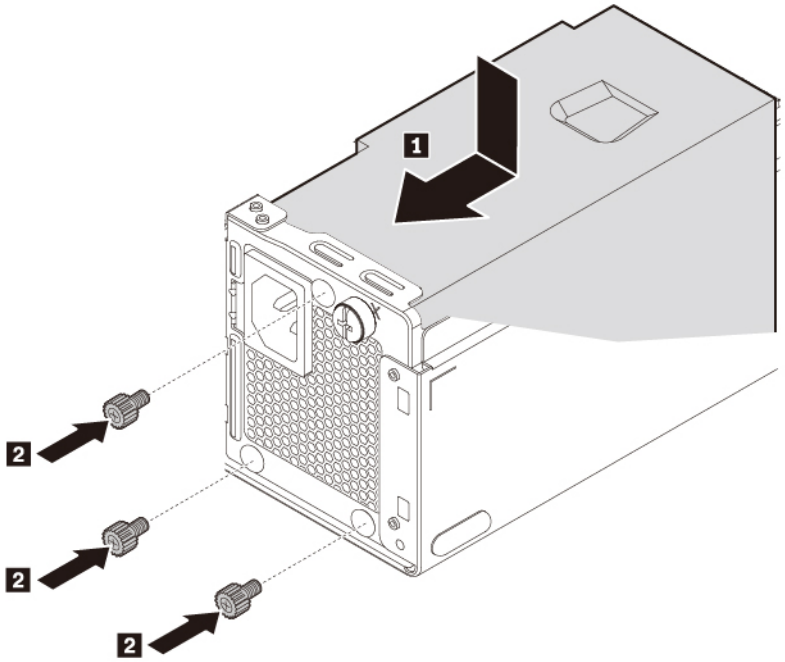

Figure 44. Installing the power supply assembly

c. Connect the power supply assembly cables to the system board and each of the drives.
d. Secure the power supply assembly cables with the cable clips and ties in the chassis.

What to do next:

- To work with another piece of hardware, go to the appropriate section.
- To complete the installation or replacement, go to “Completing the parts replacement” on page 89.

Storage drive in the storage drive bay

Attention: Do not open your computer or attempt any repair before reading and understanding the “Read this first: Important safety information” on page iii.

Depending on your computer model, one of the following devices might be installed in the storage drive bay:

- 3.5-inch storage drive
- 2.5-inch storage drive

3.5-inch storage drive

To remove or install the 3.5-inch storage drive in the bay, do the following:

1. Prepare your computer. See “Preparing your computer” on page 54.

2. Locate the storage drive bay. See “Internal storage drives” on page 8.
3. To remove the 3.5-inch storage drive, do the following:
   a. Disconnect the signal cable and the power cable from the storage drive.
   b. Push the tab inward and then press the tab downward as shown to release the storage drive from the storage drive bay.

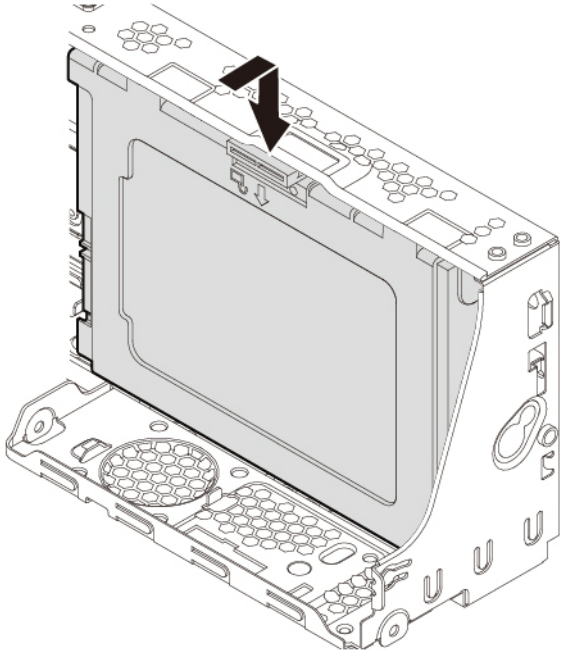

Figure 45. Releasing the 3.5-inch storage drive

c. Pull the tab outward to remove the storage drive with the bracket from the bay.

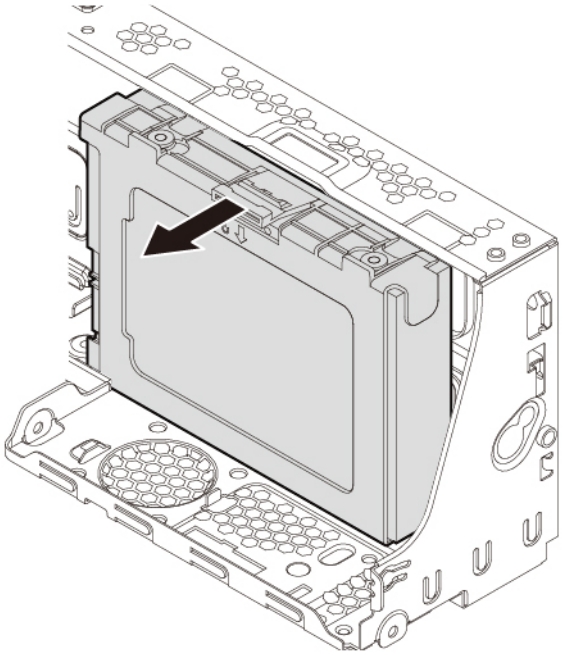

Figure 46. Removing the 3.5-inch storage drive with the bracket

d. Flex both sides of the bracket to remove the 3.5-inch storage drive from the bracket.

Note: Do not touch the contact edge a on the storage drive.

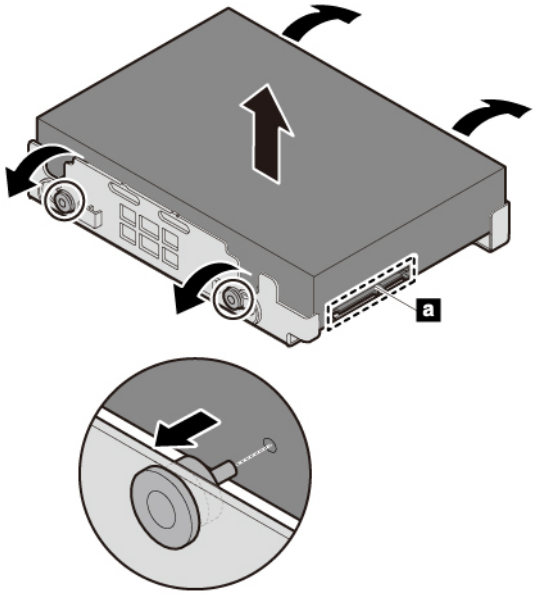

Figure 47. Removing the 3.5-inch storage drive from the bracket

4. To install a new 3.5-inch storage drive, do the following:

a. Flex both sides of the bracket and align the four pins on the bracket with the corresponding holes in the new storage drive.

   Note: Do not touch the contact edge **a** on the storage drive.

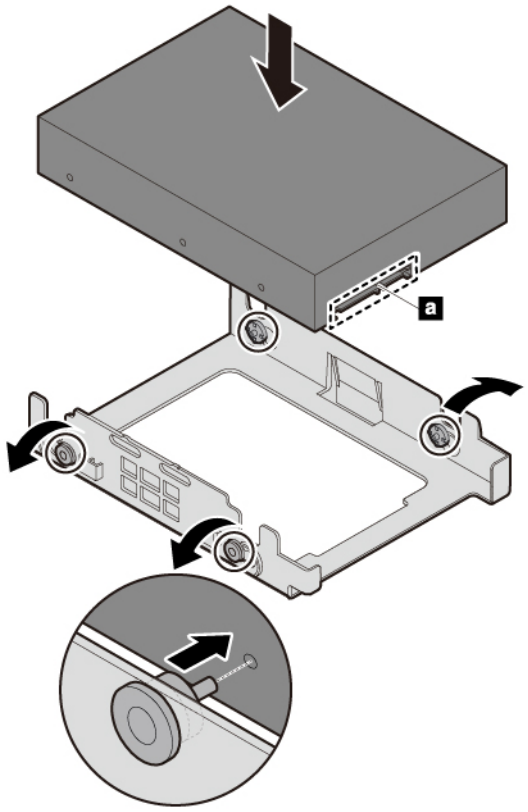

Figure 48. Installing the 3.5-inch storage drive into the bracket

b. Place the new storage drive with the bracket into the storage drive bay as shown. Press the two tabs on the bracket downward and then push the storage drive inward until it snaps into position.

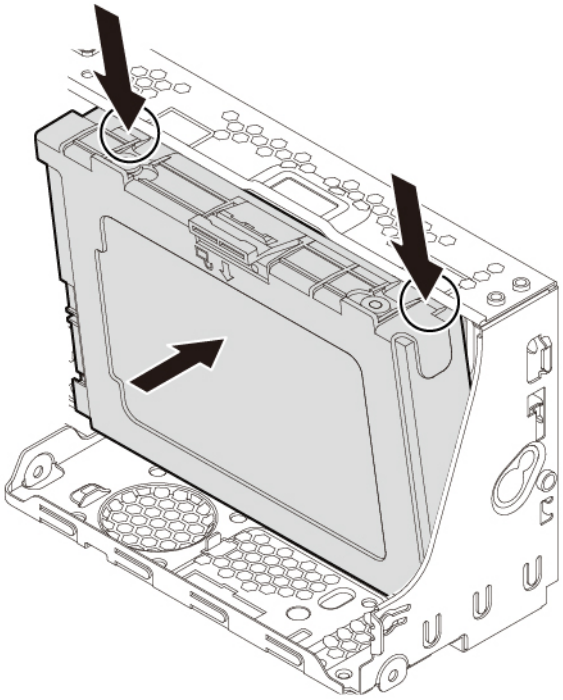

Figure 49. Installing the 3.5-inch storage drive

c. Connect the signal cable and power cable to the new storage drive.

2.5-inch storage drive

To remove or install a 2.5-inch storage drive in the storage drive bay, do the following:

1. Prepare your computer. See “Preparing your computer” on page 54.
2. Locate the storage drive bay. See “Internal storage drives” on page 8.
3. To remove a 2.5-inch storage drive in the storage drive bay, do the following:
   a. Disconnect the signal cable and the power cable from the storage drive.

b. Push the tab inward and then press the tab downward as shown to release the storage drive from the storage drive bay.

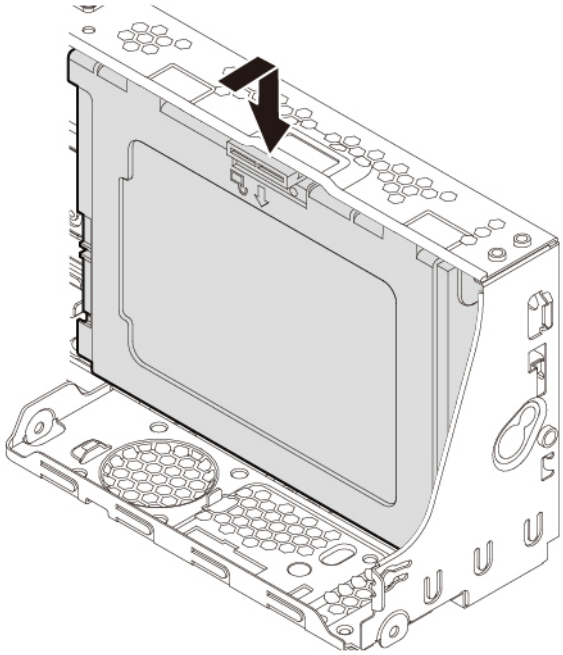

Figure 50. Releasing the storage drive

c. Pull the tab outward to remove the storage drive with the bracket from the bay.

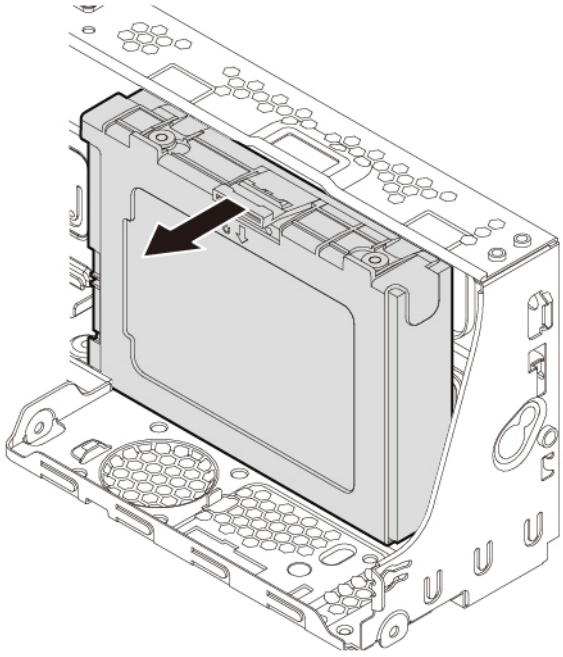

Figure 51. Removing the storage drive with the bracket

d. Flex both sides of the bracket to remove the storage drive with converter from the bracket.

Note: Do not touch the contact edge a on the storage drive.

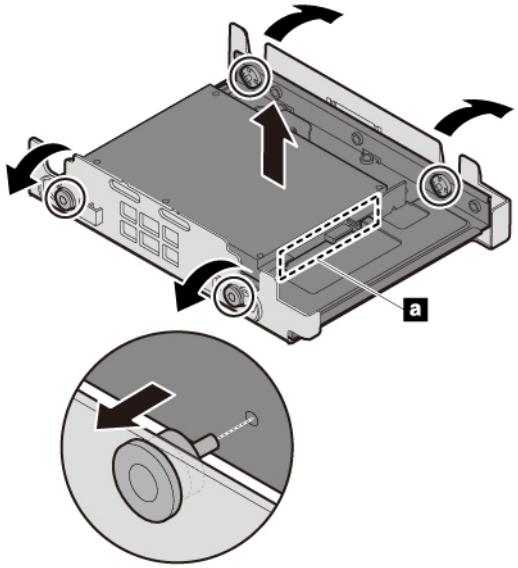

Figure 52. Removing the storage drive with converter from the bracket

e. Remove the four screws that secure the 2.5-inch storage drive. Then lift the storage drive out of the storage-drive converter.

Note: Do not touch the contact edge a on the storage drive.

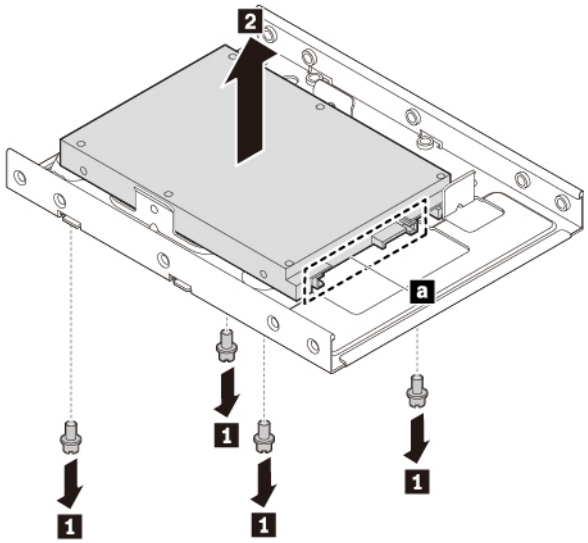

Figure 53. Removing the storage drive from the converter

4. To install a new 2.5-inch storage drive, do the following:

a. Install a new 2.5-inch storage drive into the converter. Then install the four screws to secure the new storage drive to the converter.

   Note: Do not touch the contact edge a on the storage drive.

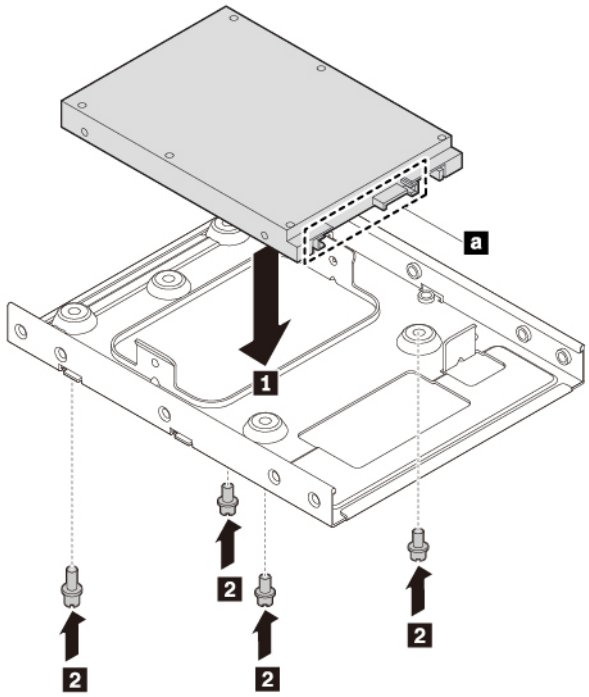

Figure 54. Installing the storage drive into the converter

b. Flex both sides of the bracket and align the four pins on the bracket with the corresponding holes in the new storage-drive converter.

Note: Do not touch the contact edge a on the storage drive.

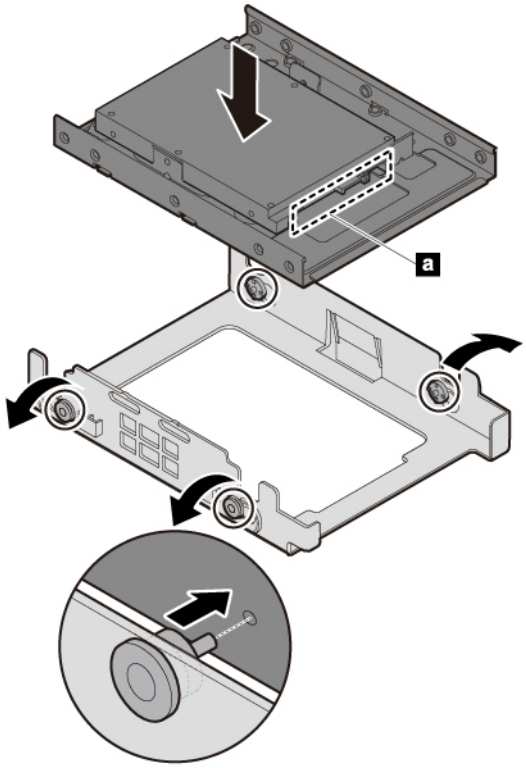

Figure 55. Installing the storage drive with converter into the bracket

c. Place the new storage drive with the bracket into the storage drive bay as shown. Press the two tabs on the bracket downward and then push the storage drive inward until it snaps into position.

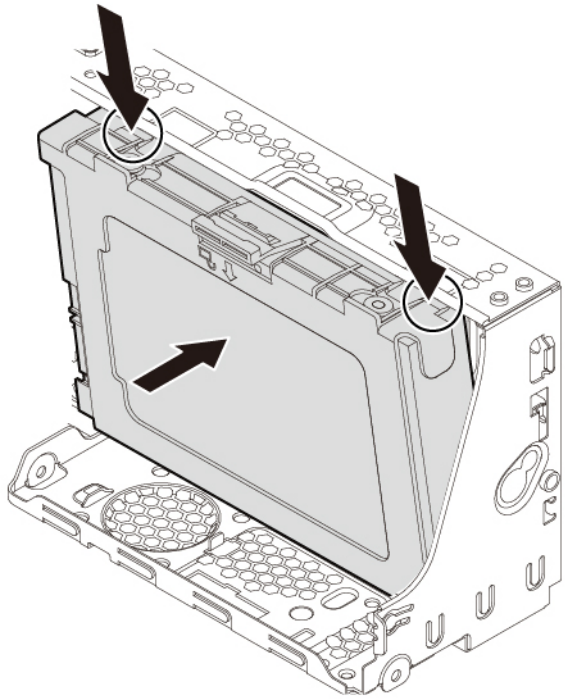

Figure 56. Installing the storage drive

d. Connect the signal cable and power cable to the new storage drive.

What to do next:

- To work with another piece of hardware, go to the appropriate section.
- To complete the installation or replacement, go to “Completing the parts replacement” on page 89.

Storage drive cage

Attention: Do not open your computer or attempt any repair before reading and understanding the “Read this first: Important safety information” on page iii.

Some computers come with a storage drive cage for installing or replacing a 2.5-inch storage drive.

To remove or install a 2.5-inch storage drive in the storage drive cage, do the following:

1. Prepare your computer. See “Preparing your computer” on page 54.
2. Locate the storage drive cage. See “Internal storage drives” on page 8.
3. To remove the storage drive in storage drive cage, do the following:
   a. Disconnect the signal cable and the power cable from the storage drive.

b. Remove the screw and slide the storage drive cage upward to release it from the chassis.

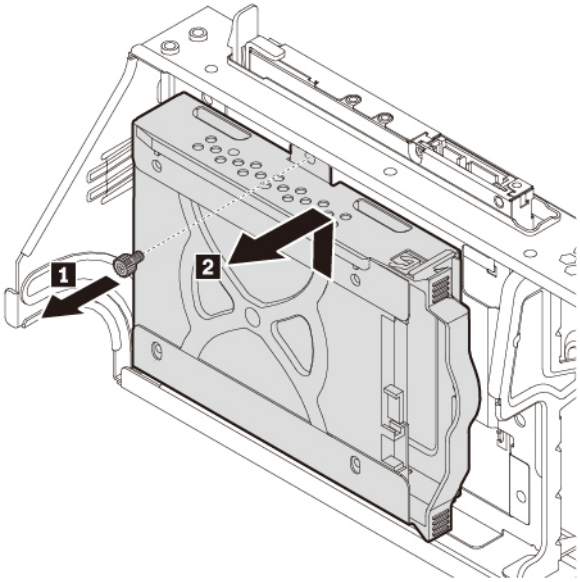

Figure 57. Removing the storage drive cage

c. Pull the handle of the bracket to remove the 2.5-inch storage drive from the cage.

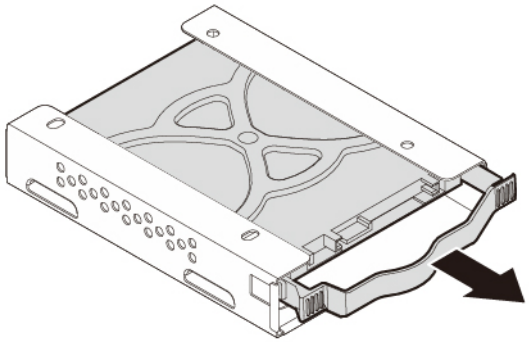

Figure 58. Removing the 2.5-inch storage drive with the bracket

d. Flex the sides of the bracket to remove the 2.5-inch storage drive from the bracket.

Note: Do not touch the contact edge a on the storage drive.

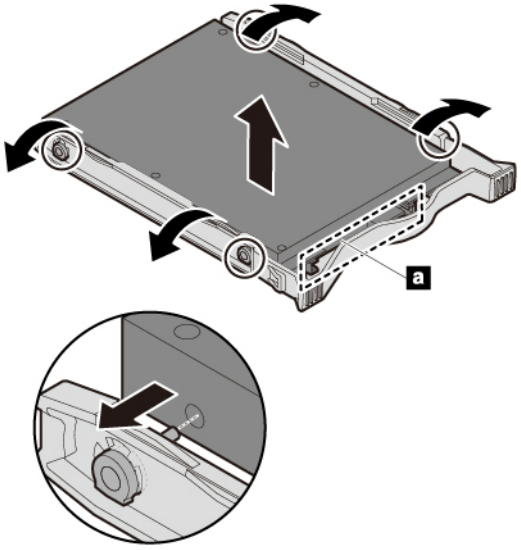

Figure 59. Removing the 2.5-inch storage drive from the bracket

4. To install the storage drive in the storage drive cage, do the following:

a. To install a new 2.5-inch storage drive into the bracket, flex the bracket and align the four pins on the bracket with the corresponding holes in the storage drive.

   Note: Do not touch the contact edge a on the storage drive.

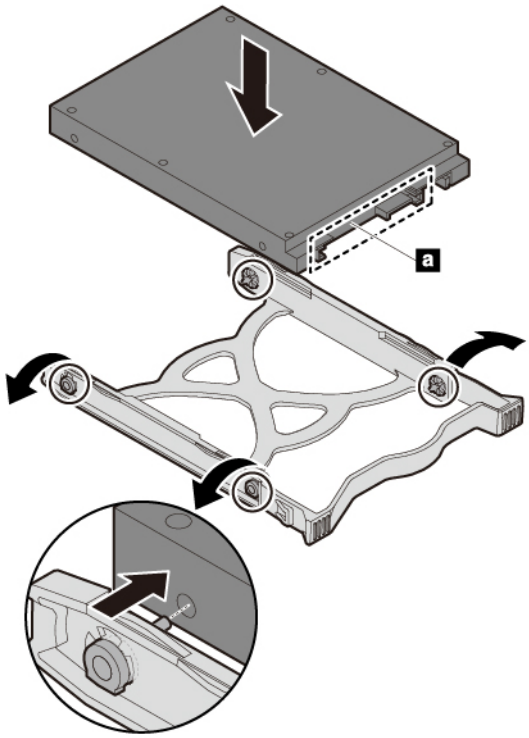

Figure 60. Installing the 2.5-inch storage drive into the bracket

b. Slide the new storage drive into the storage drive cage until it snaps into position.

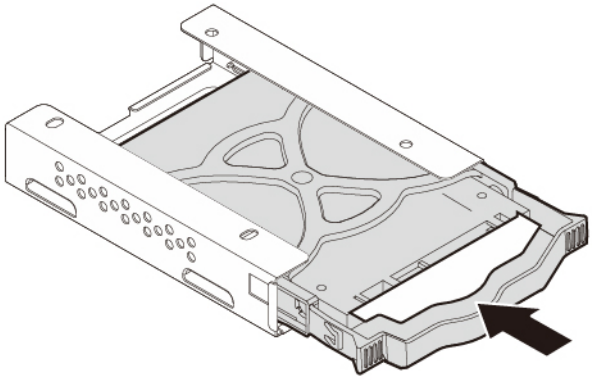

Figure 61. Installing the 2.5-inch storage drive into the storage drive cage

c. Align the four holes on the rear of the storage drive cage with the corresponding hooks in the drive bay assembly. Then slide the storage drive cage downward until it snaps into position. Install the screw to secure the storage drive cage.

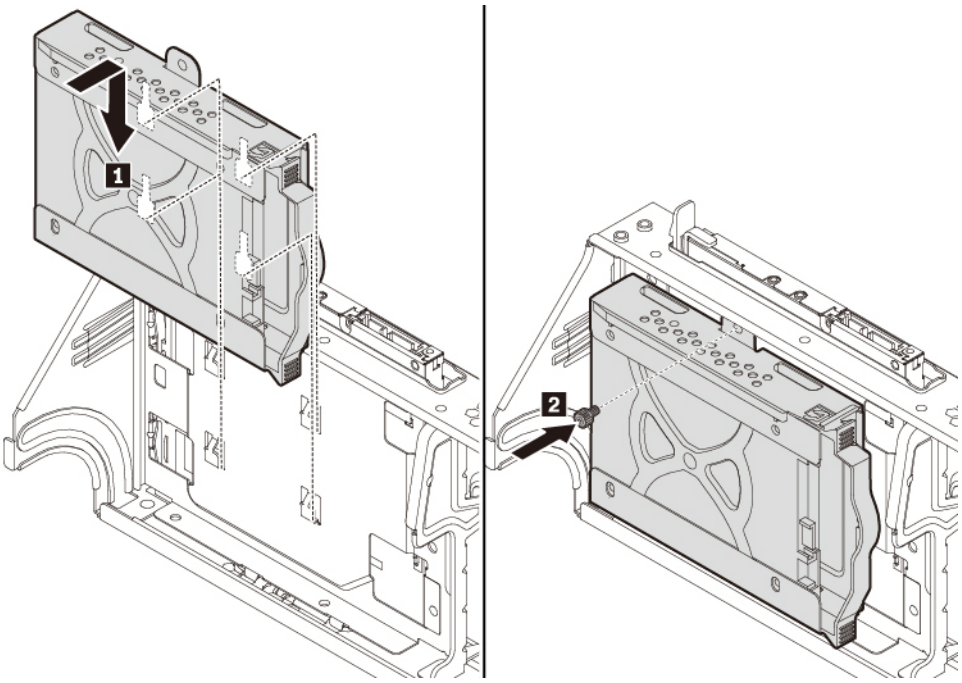

Figure 62. Installing the storage drive cage

d. Connect the signal cable and the power cable to the new storage drive.

What to do next:

- To work with another piece of hardware, go to the appropriate section.
- To complete the installation or replacement, go to “Completing the parts replacement” on page 89.

E-lock

Attention: Do not open your computer or attempt any repair before reading and understanding the “Read this first: Important safety information” on page iii.

Note: To remove the screws, you need a special tool (T15 star wrench).

To remove or install the E-lock, do the following:

1. Remove the computer cover. See “Preparing your computer” on page 54.
2. Locate the E-lock. See “Computer components” on page 5.
3. To remove the E-lock, do the following:
   a. Disconnect the E-lock cable from the E-lock connector on the system board. See “Parts on the system board” on page 6.

b. Remove the screw that secures the E-lock and remove the E-lock from the chassis.

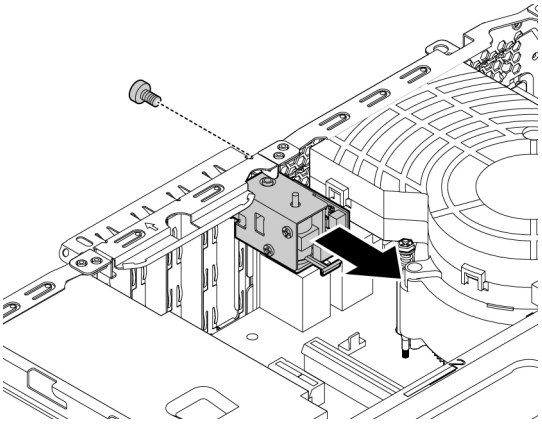

Figure 63. Removing the E-lock

4. To install the E-lock, do the following:
   a. Align the screw hole in the E-lock with the corresponding hole in the chassis. Then, install the screw to secure the E-lock to the chassis.

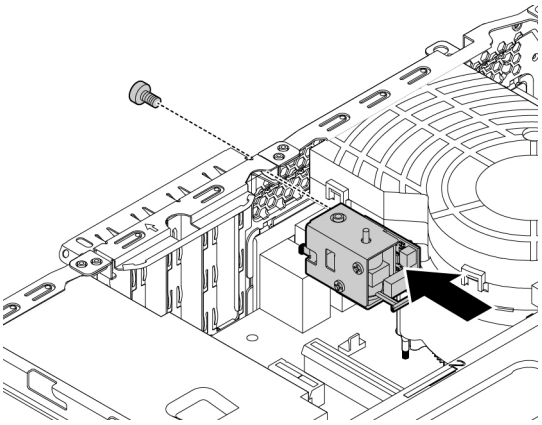

Figure 64. Installing the E-lock

   b. Connect the E-lock cable to the E-lock connector on the system board. See “Parts on the system board” on page 6.

What to do next:

- To work with another piece of hardware, go to the appropriate section.
- To complete the installation or replacement, go to “Completing the parts replacement” on page 89.

Completing the parts replacement

CAUTION:



After replacing a CRU, reinstall all protective covers, including the computer cover, before connecting power and operating the computer. This action is important to help prevent unexpected electrical shock and help ensure the containment of an unexpected fire that could happen under extremely rare conditions.

After completing the installation or replacement for all parts, reinstall the computer cover and reconnect cables. Depending on the parts you installed or replaced, you might need to confirm the updated information in the Setup Utility program. Refer to “Using the Setup Utility program” on page 33.

To reinstall the computer cover and reconnect cables to your computer, do the following:

1. Ensure that all components have been reassembled correctly and that no tools or loose screws are left inside your computer. See “Computer components” on page 5 for the locations of various components in your computer.
2. Ensure that the cables are routed correctly. Keep cables clear of the hinges and sides of the computer chassis to avoid interference with the following installation.
3. Pivot the drive bay assembly inward until it snaps into position.

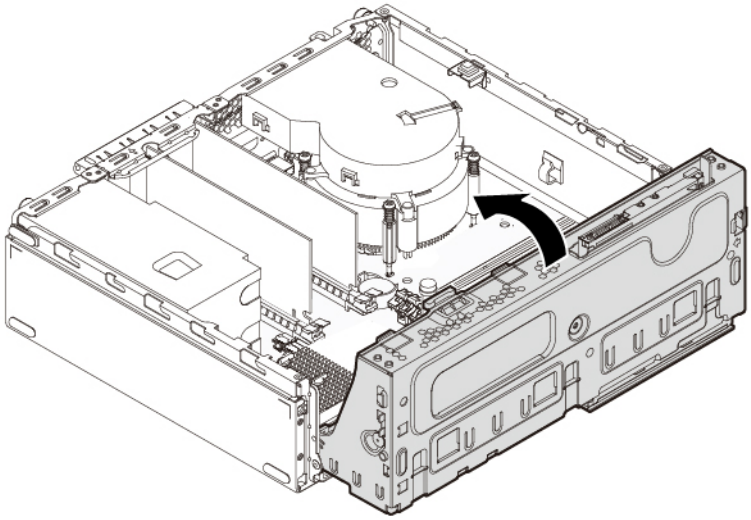

Figure 65. Pivoting the drive bay assembly inward

4. Align the three plastic tabs on the front bezel with the corresponding holes in the chassis. Then pivot the front bezel inward until it snaps into position on the top.

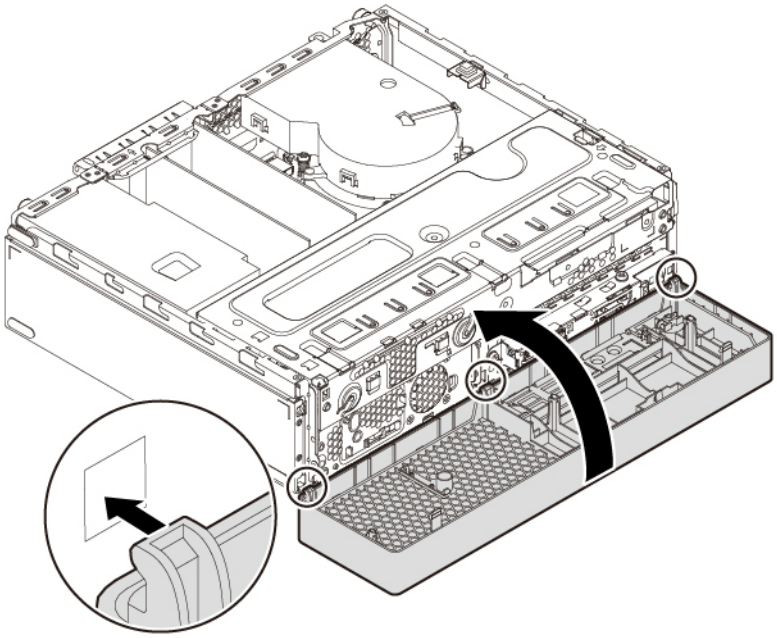

Figure 66. Reinstalling the front bezel

5. Position the computer cover on the chassis so that the rail guides on the bottom of the computer cover engage the rails on the chassis. Then, push the cover to the front of the computer until it snaps into position. Install the screws to secure the computer cover.

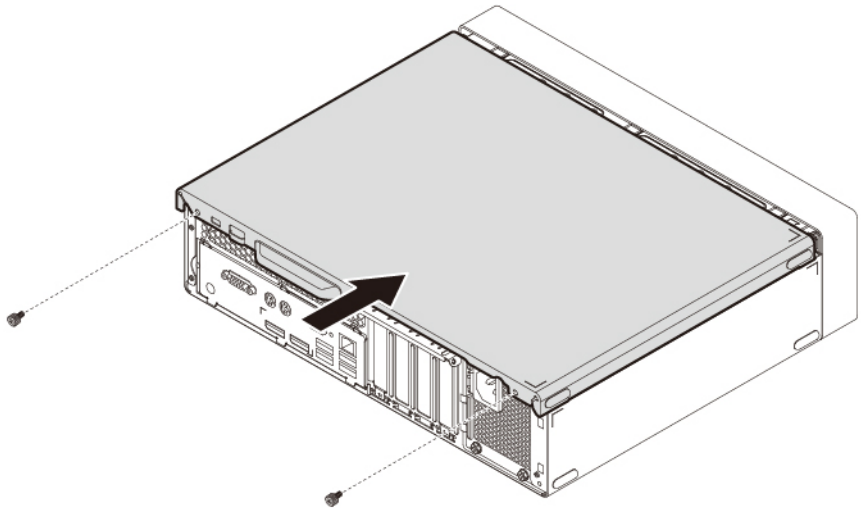

Figure 67. Reinstalling the computer cover

6. Place the computer in an upright position.
7. If a locking device is available, lock the computer cover. See “Locking your computer” on page 27.

8. Reconnect the external cables and power cords to the corresponding connectors on the computer. See “Hardware locations” on page 1.
9. Update the configuration of your computer. See “Using the Setup Utility program” on page 33.
10. If a newly installed hardware component does not work correctly, update the device driver. See “Keeping your computer current” on page 22.

Chapter 8. Getting information, help, and service

This chapter provides information about getting help and support from Lenovo.

Information resources

You can use the information in this section to access useful resources relating to your computing needs.

Accessing the user guide in various languages

To access the user guide in various languages, go to:
https://support.lenovo.com

Windows help system

The Windows help system provides you with detailed information about using the Windows operating system.

Note: Using the help for Windows 10 requires an active Internet connection.

To access the Windows help system, do the following:

1. Click the Start button to open the Start menu.
2. Click **Get Help**.

Safety and warranty

The *Safety, Warranty, and Setup Guide* provided with your computer contains important safety information, product warranty terms, initial setup procedure, and legal notices. Ensure that you read and understand all safety information in the *Safety, Warranty, and Setup Guide* before using your computer.

In addition, read and understand “Read this first: Important safety information” on page iii before using your computer. This preface provides additional safety information that applies to topics and tasks described in this *User Guide*.

Lenovo Web site

The Lenovo Web site (https://www.lenovo.com) provides up-to-date information and services to help you buy, upgrade, and maintain your computer. You also can do the following:

- Shop for desktop and notebook computers, monitors, projectors, upgrades, and accessories for your computer, and special offers.
- Purchase additional services, such as support for hardware, operating systems, programs, network setup and configuration, and custom installations.
- Purchase upgrades and extended hardware repair services.
- Access troubleshooting and support information for your computer model and other supported products.
- Find a Service Provider located near you.

Lenovo Support Web site

Technical support information is available on the Lenovo Support Web site at:
https://support.lenovo.com

© Copyright Lenovo 2020

This Web site is updated with the latest support information such as the following:

- Drivers and software
- Diagnostic solutions
- Product and service warranty
- Product and parts details
- User guides and manuals
- Knowledge base and frequently asked questions
- Lenovo Support phone numbers

Help and service

This section provides information about obtaining help and service.

Calling for service

During the warranty period, you can get help and information by telephone through the Customer Support Center. For the warranty period of your computer, go to https://www.lenovo.com/warranty-status. For a list of Lenovo Support phone numbers, go to https://pcsupport.lenovo.com/supportphonelist.

Note: Phone numbers are subject to change without notice. If the number for your country or region is not provided, contact your Lenovo reseller or Lenovo marketing representative.

The following services are available during the warranty period:

- **Problem determination** - Trained service personnel are available to assist you with determining a hardware problem and deciding what action is necessary to fix the problem.
- **Hardware repair** - If the problem is caused by hardware under warranty, trained service personnel are available to provide the applicable level of service.
- **Engineering Change management** - There might be changes that are required after a product has been sold. Lenovo or your reseller will make selected Engineering Changes (ECs) that apply to your hardware available.

These items are not covered by the warranty:
- Replacement or use of parts not manufactured for or by Lenovo or non-warranted Lenovo parts
- Identification of software problem sources
- Configuration of BIOS as part of an installation or upgrade
- Changes, modifications, or upgrades to device drivers
- Installation and maintenance of network operating systems (NOS)
- Installation and maintenance of programs

If possible, be at your computer when you call. Have the following information available:
- Machine type and model
- Serial numbers of your hardware products
- Description of the problem
- Exact wording of any error messages
- Hardware and software configuration information

Using other services

You might travel with your computer or relocate it to a country or region where the machine type for your desktop or notebook computer is sold. In such a situation, your computer might be eligible for International

Warranty Service, which automatically entitles you to obtain warranty service throughout the warranty period. Service will be performed by service providers authorized to perform warranty service.

Service methods and procedures vary by country, and some services might not be available in all countries. International Warranty Service is delivered through the method of service (such as depot, carry-in, or on-site service) that is provided in the servicing country. Service centers in certain countries might not be able to service all models of a particular machine type. In some countries, fees and restrictions might apply at the time of service.

To determine whether your computer is eligible for International Warranty Service and to view a list of the countries or regions where service is available, go to https://support.lenovo.com.

For technical assistance with the installation of or questions related to Service Packs for your preinstalled Microsoft Windows product, go to https://support.microsoft.com. You also can contact the Lenovo Customer Support Center for help. Some fees might apply.

Purchasing additional services

During and after the warranty period, you can purchase additional services. Examples of these additional services include:

- Support for hardware, operating systems, and programs
- Network setup and configuration services
- Upgraded or extended hardware repair services
- Custom installation services

Service availability and service name might vary by country or region. For more information about these services, go to the Lenovo Web site at:
https://www.lenovo.com

Appendix A. System memory speed

The Intel Xeon® microprocessor families compatible with this ThinkStation computer feature an integrated memory controller. The memory controller provides the microprocessor with direct access to the system memory. Therefore, the system memory speed will be determined by the memory module type, frequency, size (capacity), the number of memory modules installed, and the microprocessor model.

Notes:

- The actual system memory speed of the memory modules varies depending on the microprocessor model. For example, your computer comes with 2666 MT/s memory modules, but the microprocessor only supports up to 2400 MT/s memory modules. Then the system memory speed will be no faster than 2400 MT/s.
- The microprocessor models supported in your computer might vary. For a list of supported microprocessor models, contact the Lenovo Customer Support Center.
- The ECC memory modules are not supported on the computer models with Intel Core i5 or i7 microprocessors.

Refer to the following information about the system memory speed:

- **Memory module types:**
  - DDR4 ECC UDIMMs
  - DDR4 non-ECC UDIMMs
- **Memory module operating voltage**: 1.2 V
- **Memory module frequency**: 2666 MT/s
- **Microprocessor models**:
  - Intel Xeon: E-2176G, E-2174G, E-2146G, E-2144G, E-2136, E-2134, E-2126G, E-2124G, E-2124, and E-2104G
  - Intel Core: i7-8700, i5-8600, i5-8500, i5-8400, i3-8300, and i3-8100
  - Intel Pentium: G5400

© Copyright Lenovo 2020

Appendix B. Supplemental information about the Ubuntu operating system

In limited countries or regions, Lenovo offers customers an option to order computers with the preinstalled Ubuntu® operating system.

If the Ubuntu operating system is available on your computer, read the following information before you use the computer. Ignore any information related to Windows-based programs, utilities, and Lenovo preinstalled applications in this documentation.

Access the Lenovo Limited Warranty

This product is covered by the terms of the Lenovo Limited Warranty (LLW), version L505-0010-02 08/2011. You can view the LLW in a number of languages from the following Web site. Read the Lenovo Limited Warranty at:
https://www.lenovo.com/warranty/llw_02

The LLW also is preinstalled on the computer. To access the LLW, go to the following directory:

```
/usr/share/doc/lenovo-doc
```

If you cannot view the LLW either from the Web site or from your computer, contact your local Lenovo office or reseller to obtain a printed version of the LLW.

Access the Ubuntu help system

The Ubuntu help system provides information about how to use the Ubuntu operating system. To access the help system from Home Screen, move your pointer to the Launch bar, and then click the **Help** icon. If you cannot find the **Help** icon from the Launch bar, click the **Search** icon on the bottom left, and type Help to search it.

To learn more about the Ubuntu operating system, go to:
https://www.ubuntu.com

Get support information

If you need help, service, technical assistance, or more information about the Ubuntu operating system or other applications, contact the provider of the Ubuntu operating system or the provider of the application. If you need the service and support for hardware components shipped with your computer, contact Lenovo. For more information about how to contact Lenovo, refer to the *User Guide* and *Safety and Warranty Guide*.

To access the latest *User Guide* and *Safety and Warranty Guide*, go to:
https://support.lenovo.com

© Copyright Lenovo 2020

Appendix C. Regulatory and TCO Certified information of countries and regions

The latest compliance information is available at:
https://www.lenovo.com/compliance

Export classification notice

This product is subject to the United States Export Administration Regulations (EAR) and has an Export Classification Control Number (ECCN) of 5A992.c. It can be re-exported except to any of the embargoed countries in the EAR E1 country list.

TCO Certified

Selected models are TCO Certified and bear the TCO Certified logo.

Note: TCO Certified is an international third-party sustainability certification for IT products. For details, go to https://www.lenovo.com/us/en/compliance/tco.

Taiwan precautionary vision statement

警語：使用過度恐傷害視力

注意事項：

- 使用30分鐘請休息10分鐘。
- 未滿2歲幼兒不看螢幕，2歲以上每天看螢幕不要超過1小時。

Electronic emissions notices

Federal Communications Commission Declaration of Conformity

The following information refers to Lenovo personal computer machine types 30D1, 30D2, and 30D4.

This equipment has been tested and found to comply with the limits for a Class B digital device, pursuant to Part 15 of the FCC Rules. These limits are designed to provide reasonable protection against harmful interference in a residential installation. This equipment generates, uses, and can radiate radio frequency energy and, if not installed and used in accordance with the instructions, may cause harmful interference to radio communications. However, there is no guarantee that interference will not occur in a particular installation. If this equipment does cause harmful interference to radio or television reception, which can be determined by turning the equipment off and on, the user is encouraged to try to correct the interference by one or more of the following measures:

- Reorient or relocate the receiving antenna.
- Increase the separation between the equipment and receiver.
- Connect the equipment into an outlet on a circuit different from that to which the receiver is connected.
- Consult an authorized dealer or service representative for help.

Lenovo is not responsible for any radio or television interference caused by using other than recommended cables and connectors or by unauthorized changes or modifications to this equipment. Unauthorized changes or modifications could void the user's authority to operate the equipment.

© Copyright Lenovo 2020

This device complies with Part 15 of the FCC Rules. Operation is subject to the following two conditions: (1) this device may not cause harmful interference, and (2) this device must accept any interference received, including interference that may cause undesired operation.

Responsible Party:
Lenovo (United States) Incorporated
7001 Development Drive
Morrisville, NC 27560
Email: FCC@lenovo.com



Industry Canada compliance statement

CAN ICES-3(B)/NMB-3(B)

European Union conformity

EU Contact: Lenovo (Slovakia), Landererova 12, 811 09 Bratislava, Slovakia



EMC Directive Statement: This product is in conformity with the protection requirements of EU Council Directive 2014/30/EU on the approximation of the laws of the Member States relating to electromagnetic compatibility.

This product has been tested and found to comply with the limits for Class B equipment according to European Standards harmonized in the Directives in compliance. The Class B requirements for equipment are intended to offer adequate protection to broadcast services within residential environments.

Radio Equipment Directive Statement: This product is in conformity with all the requirements and essential norms that apply to EU Council Radio Equipment Directive 2014/53/EU on the approximation of the laws of the Member States relating to radio equipment. The full text of the system EU declaration of conformity and the EU wireless module declarations are available at the following Internet addresses: https://www.lenovo.com/eu-doc-workstations

Lenovo cannot accept responsibility for any failure to satisfy the protection requirements resulting from a non-recommended modification of the product, including the installation of option cards from other manufacturers.

German Class B compliance statement

Hinweis zur Einhaltung der Klasse B zur elektromagnetischen Verträglichkeit

Dieses Produkt entspricht den Schutzanforderungen der EU-Richtlinie zur elektromagnetischen Verträglichkeit Angleichung der Rechtsvorschriften über die elektromagnetische Verträglichkeit in den EU-Mitgliedsstaaten und hält die Grenzwerte der Klasse B der Norm gemäß Richtlinie.

Um dieses sicherzustellen, sind die Geräte wie in den Handbüchern beschrieben zu installieren und zu betreiben. Des Weiteren dürfen auch nur von der Lenovo empfohlene Kabel angeschlossen werden. Lenovo übernimmt keine Verantwortung für die Einhaltung der Schutzanforderungen, wenn das Produkt ohne Zustimmung der Lenovo verändert bzw. wenn Erweiterungskomponenten von Fremdherstellern ohne Empfehlung der Lenovo gesteckt/eingebaut werden.

Zulassungsbescheinigung laut dem Deutschen Gesetz über die elektromagnetische Verträglichkeit von Betriebsmitteln, EMVG vom 20. Juli 2007 (früher Gesetz über die elektromagnetische Verträglichkeit von Geräten), bzw. der EU Richtlinie 2014/30/EU, der EU Richtlinie 2014/53/EU Artikel 3.1b), für Geräte der Klasse B.

Dieses Gerät ist berechtigt, in Übereinstimmung mit dem Deutschen EMVG das EG-Konformitätszeichen - CE - zu führen. Verantwortlich für die Konformitätserklärung nach Paragraf 5 des EMVG ist die Lenovo (Deutschland) GmbH, Meitnerstr. 9, D-70563 Stuttgart.

Korean wireless-radio compliance information

무선설비 전파 혼신 **(사용주파수 2400~2483.5 , 5725~5825 무선제품해당)**

해당 무선설비가 전파혼신 가능성이 있으므로 인명안전과 관련된 서비스는 할 수 없음

SAR 정보

본 장치는 전파 노출에 대한 가이드라인을 충족합니다.

본 장치는 무선 송수신기 입니다. 본 장치는 국제 가이드라인으로 권장되는 전파 노출에 대한 제한을 초과하지 않도록 설계되었습니다. 장치 액세서리 및 최신 부품을 사용할 경우 SAR 값이 달라질 수 있 습니다. SAR 값은 국가 보고 및 테스트 요구 사항과 네트워크 대역에 따라 다를 수 있습니다. 본 장치 는 사람의 신체에서 20mm 이상의 거리에서 사용할 수 있습니다.

Japan VCCI Class B compliance statement

この装置は、クラスB機器です。この装置は、住宅環境で使用することを目的としていますが、この装置がラジオやテレビジョン受信機に近接して使用されると、受信障害を引き起こすことがあります。
取扱説明書に従って正しい取り扱いをして下さい。

VCCI-B

Japan compliance statement for products which connect to the power mains with rated current less than or equal to 20 A per phase

日本の定格電流が 20A/相 以下の機器に対する高調波電流規制
高調波電流規格 JIS C 61000-3-2 適合品

Japan notice for ac power cord

The ac power cord shipped with your product can be used only for this specific product. Do not use the ac power cord for other devices.

本製品およびオプションに電源コード・セットが付属する場合は、
それぞれ専用のものになっていますので他の電気機器には使用し
ないでください。

Lenovo product service information for Taiwan

委製商/進口商名稱: 荷蘭商聯想股份有限公司台灣分公司
進口商地址: 台北市中山區北安路780號7樓
進口商電話: 0800-000-702 (代表號)

Keyboard and mouse compliance statement for Taiwan

本產品隨貨附已取得經濟部標準檢驗局認可之PS/2或USB的鍵盤與滑鼠一組

Eurasian compliance mark



Brazil audio notice

Ouvir sons com mais de 85 decibéis por longos períodos pode provocar danos ao sistema auditivo.

Mexico wireless-radio compliance information

Advertencia: En Mexico la operación de este equipo estásujeta a las siguientes dos condiciones: (1) es posible que este equipo o dispositivo no cause interferencia perjudicial y (2) este equipo o dispositivo debe aceptar cualquier interferencia, incluyendo la que pueda causar su operación no deseada.

Additional regulatory information

For additional regulatory information, refer to the *Regulatory Notice* shipped with your computer. Depending on the configuration of your computer and the country or region where the computer was purchased, you might have received additional printed regulatory notices. All regulatory notices are available on the Lenovo Support Web site in electronic format. To access electronic copies of the documentation, go to https://support.lenovo.com.

Appendix D. WEEE and recycling information of countries and regions

Lenovo encourages owners of information technology (IT) equipment to responsibly recycle their equipment when it is no longer needed. Lenovo offers various programs and services to assist equipment owners in recycling their IT products. The latest environmental information is available at:
https://www.lenovo.com/ecodeclaration

Important WEEE information

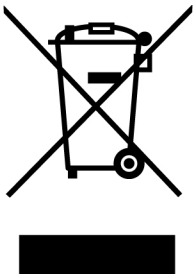

The WEEE marking on Lenovo products applies to countries with WEEE and e-waste regulations (for example, the European WEEE Directive, India E-Waste Management Rules). Appliances are labeled in accordance with local regulations concerning waste electrical and electronic equipment (WEEE). These regulations determine the framework for the return and recycling of used appliances as applicable within each geography. This label is applied to various products to indicate that the product is not to be thrown away, but rather put in the established collection systems for reclaiming these end of life products.

Users of electrical and electronic equipment (EEE) with the WEEE marking must not dispose of end of life EEE as unsorted municipal waste, but use the collection framework available to them for the return, recycle, and recovery of WEEE and to minimize any potential effects of EEE on the environment and human health due to the presence of hazardous substances. Lenovo electrical and electronic equipment (EEE) may contain parts and components, which at end-of-life might qualify as hazardous waste.

EEE and waste electrical and electronic equipment (WEEE) can be delivered free of charge to the place of sale or any distributor that sells electrical and electronic equipment of the same nature and function as the used EEE or WEEE.

For additional WEEE information, go to:
https://www.lenovo.com/recycling

WEEE information for Hungary

Lenovo, as a producer, bears the cost incurred in connection with the fulfillment of Lenovo's obligations under Hungary Law No. 197/2014 (VIII.1.) subsections (1)-(5) of section 12.

Recycling information for Japan

Collecting and recycling a disused Lenovo computer or monitor

If you are a company employee and need to dispose of a Lenovo computer or monitor that is the property of the company, you must do so in accordance with the Law for Promotion of Effective Utilization of Resources. Computers and monitors are categorized as industrial waste and should be properly disposed of by an

© Copyright Lenovo 2020

industrial waste disposal contractor certified by a local government. In accordance with the Law for Promotion of Effective Utilization of Resources, Lenovo Japan provides, through its PC Collecting and Recycling Services, for the collecting, reuse, and recycling of disused computers and monitors. For details, visit the Lenovo Web site at https://www.lenovo.com/recycling/japan. Pursuant to the Law for Promotion of Effective Utilization of Resources, the collecting and recycling of home-used computers and monitors by the manufacturer was begun on October 1, 2003. This service is provided free of charge for home-used computers sold after October 1, 2003. For details, visit the Lenovo Web site at https://www.lenovo.com/recycling/japan.

Disposing of Lenovo computer components

Some Lenovo computer products sold in Japan may have components that contain heavy metals or other environmental sensitive substances. To properly dispose of disused components, such as a printed circuit board or drive, use the methods described above for collecting and recycling a disused computer or monitor.

Disposing of disused lithium batteries from Lenovo computers

A button-shaped lithium battery is installed inside your Lenovo computer to provide power to the computer clock while the computer is off or disconnected from the main power source. If you need to replace it with a new one, contact your place of purchase or contact Lenovo for service. If you need to dispose of a disused lithium battery, insulate it with vinyl tape, contact your place of purchase or an industrial-waste-disposal operator, and follow their instructions. Disposal of a lithium battery must comply with local ordinances and regulations.

Recycling information for Brazil

Declarações de Reciclagem no Brasil

Descarte de um Produto Lenovo Fora de Uso

Equipamentos elétricos e eletrônicos não devem ser descartados em lixo comum, mas enviados à pontos de coleta, autorizados pelo fabricante do produto para que sejam encaminhados e processados por empresas especializadas no manuseio de resíduos industriais, devidamente certificadas pelos orgãos ambientais, de acordo com a legislação local.

A Lenovo possui um canal específico para auxiliá-lo no descarte desses produtos. Caso você possua um produto Lenovo em situação de descarte, ligue para o nosso SAC ou encaminhe um e-mail para: reciclar@lenovo.com, informando o modelo, número de série e cidade, a fim de enviarmos as instruções para o correto descarte do seu produto Lenovo.

Recycling information for mainland China

《废弃电器电子产品回收处理管理条例》提示性说明

联想鼓励拥有联想品牌产品的用户当不再需要此类产品时，遵守国家废弃电器电子产品回收处理相关法律法规，将其交给当地具有国家认可的回收处理资质的厂商进行回收处理。更多回收服务信息，请点击进入http://support.lenovo.com.cn/activity/551.htm

Battery recycling information for Taiwan



Battery recycling information for the European Union



Notice: This mark applies only to countries within the European Union (EU).

Batteries or packaging for batteries are labeled in accordance with European Directive 2006/66/EC concerning batteries and accumulators and waste batteries and accumulators. The Directive determines the framework for the return and recycling of used batteries and accumulators as applicable throughout the European Union. This label is applied to various batteries to indicate that the battery is not to be thrown away, but rather reclaimed upon end of life per this Directive.

In accordance with the European Directive 2006/66/EC, batteries and accumulators are labeled to indicate that they are to be collected separately and recycled at end of life. The label on the battery may also include a chemical symbol for the metal concerned in the battery (Pb for lead, Hg for mercury, and Cd for cadmium). Users of batteries and accumulators must not dispose of batteries and accumulators as unsorted municipal waste, but use the collection framework available to customers for the return, recycling, and treatment of batteries and accumulators. Customer participation is important to minimize any potential effects of batteries and accumulators on the environment and human health due to the potential presence of hazardous substances.

Before placing electrical and electronic equipment (EEE) in the waste collection stream or in waste collection facilities, the end user of equipment containing batteries and/or accumulators must remove those batteries and accumulators for separate collection.

Disposing of lithium batteries and battery packs from Lenovo products

A coin-cell type lithium battery might be installed inside your Lenovo product. You can find details about the battery in the product documentation. If the battery needs to be replaced, contact your place of purchase or contact Lenovo for service. If you need to dispose of a lithium battery, insulate it with vinyl tape, contact your place of purchase or a waste-disposal operator, and follow their instructions.

Disposing of battery packs from Lenovo products

Your Lenovo device might contain a lithium-ion battery pack or a nickel metal hydride battery pack. You can find details on the battery pack in the product documentation. If you need to dispose of a battery pack, insulate it with vinyl tape, contact Lenovo sales, service, or your place of purchase, or a waste-disposal operator, and follow their instructions. You also can refer to the instructions provided in the user guide for your product.

For proper collection and treatment, go to:
https://www.lenovo.com/lenovo/environment

Appendix E. Restriction of Hazardous Substances (RoHS) Directive of countries and regions

The latest environmental information is available at:
https://www.lenovo.com/ecodeclaration

European Union RoHS

This Lenovo product, with included parts (cables, cords, and so on) meets the requirements of Directive 2011/65/EU on the restriction of the use of certain hazardous substances in electrical and electronic equipment (“RoHS recast” or “RoHS 2”).

For more information about Lenovo worldwide compliance on RoHS, go to:
https://www.lenovo.com/rohs-communication

Mainland China RoHS

产品中有害物质的名称及含量

部件名称	有害物质					
	铅(Pb)	汞(Hg)	镉(Cd)	六价铬 (Cr(VI))	多溴连苯 (PBB)	多溴二苯醚 (PBDE)
印刷电路板组件*	X	O	O	O	O	O
硬盘	X	O	O	O	O	O
光驱	X	O	O	O	O	O
内存	X	O	O	O	O	O
电脑I/O 附件	X	O	O	O	O	O
电源	X	O	O	O	O	O
键盘	X	O	O	O	O	O
鼠标	X	O	O	O	O	O
机箱/ 附件	X	O	O	O	O	O
电池	X	O	O	O	O	O

本表格依据 SJ/T 11364 的规定编制。
O：表示该有害物质在该部件所有均质材料中的含量均在 GB/T 26572 规定的限量要求以下。
×：表示该有害物质至少在该部件的某一均质材料中的含量超出 GB/T 26572 规定的限量要求。
注：表中标记“×”的部件，皆因全球技术发展水平限制而无法实现有害物质的替代。
印刷电路板组件*：包括印刷电路板及其零部件、电容和连接器
根据型号的不同，可能不会含有以上的所有部件，请以实际购买机型为准



在中华人民共和国境内销售的电子信息产品必须标识此标志，标志内的数字代表在正常使用状态下的产品的环保使用期限

Turkish RoHS

The Lenovo product meets the requirements of the Republic of Turkey Directive on the Restriction of the Use of Certain Hazardous Substances in Waste Electrical and Electronic Equipment (WEEE).

© Copyright Lenovo 2020

Türkiye AEEE Yönetmeliğine Uygunluk Beyanı

Bu Lenovo ürünü, T.C. Çevre ve Orman Bakanlığı'nın “Atık Elektrik ve Elektronik Eşyalarda Bazı Zararlı Maddelerin Kullanımının Sınırlandırılmasına Dair Yönetmelik (AEEE)” direktiflerine uygundur.

AEEE Yönetmeliğine Uygundur.

Ukraine RoHS

Цим підтверджуємо, що продукція Леново відповідає вимогам нормативних актів України, які обмежують вміст небезпечних речовин

India RoHS

RoHS compliant as per E-Waste (Management) Rules.

Taiwan RoHS

單元	限用物質及其化學符號					
	鉛 (Pb)	汞 (Hg)	鎘 (Cd)	六價鉻 (Cr^{+6})	多溴聯苯 (PBB)	多溴二苯醚 (PBDE)
印刷電路板組件	−	○	○	○	○	○
硬碟	−	○	○	○	○	○
光碟機	−	○	○	○	○	○
記憶體	−	○	○	○	○	○
電腦I/O配件	−	○	○	○	○	○
電源供應器	−	○	○	○	○	○
鍵盤	−	○	○	○	○	○
滑鼠	−	○	○	○	○	○
機殼/配件	−	○	○	○	○	○

備考1. 〝超出0.1 wt %〞及〝超出0.01 wt %〞係指限用物質之百分比含量超出百分比含量基準值。
備考2. 〝○〞係指該項限用物質之百分比含量未超出百分比含量基準值。
備考3. 〝−〞係指該項限用物質為排除項目。

Appendix F. ENERGY STAR model information

ENERGY STAR® is a joint program of the U.S. Environmental Protection Agency and the U.S. Department of Energy aimed at saving money and protecting the environment through energy efficient products and practices.

Lenovo is proud to offer products with the ENERGY STAR certified designation. Lenovo computers, if carry an ENERGY STAR mark, have been designed and tested to conform to the ENERGY STAR program requirements for computers as prescribed by the U.S. Environmental Protection Agency. For a certified computer, an ENERGY STAR mark may be affixed to the product, the product packaging, or displayed electronically on the E-label screen or the power settings interface.

By using ENERGY STAR compliant products and taking advantage of the power-management features of your computer, you reduce the consumption of electricity. Reduced electrical consumption contributes to potential financial savings, a cleaner environment, and the reduction of greenhouse gas emissions. For more information about ENERGY STAR, go to https://www.energystar.gov/.

Lenovo encourages you to make efficient use of energy an integral part of your day-to-day operations. To help in this endeavor, set the following power-management features to take effect when your computer has been inactive for a specified duration:

Table 1. Default power plan (when plugged into ac power)

• Turn off the display: After 10 minutes • Put the computer to sleep: After 25 minutes

To awaken your computer from Sleep mode, press any key on your keyboard.

To change power settings, do the following:

1. Click the Start button to open the Start menu.
2. Click **Windows System → Control Panel**.
3. View Control Panel by Large icons or Small icons, and then click **Power Options**.
4. Follow the instructions on the screen.

© Copyright Lenovo 2020

Appendix G. Notices

Lenovo may not offer the products, services, or features discussed in this document in all countries. Consult your local Lenovo representative for information on the products and services currently available in your area. Any reference to a Lenovo product, program, or service is not intended to state or imply that only that Lenovo product, program, or service may be used. Any functionally equivalent product, program, or service that does not infringe any Lenovo intellectual property right may be used instead. However, it is the user's responsibility to evaluate and verify the operation of any other product, program, or service.

Lenovo may have patents or pending patent applications covering subject matter described in this document. The furnishing of this document does not give you any license to these patents. You can send license inquiries, in writing, to:

Lenovo (United States), Inc.
8001 Development Drive
Morrisville, NC 27560
U.S.A.
Attention: Lenovo Director of Licensing

LENOVO PROVIDES THIS PUBLICATION "AS IS" WITHOUT WARRANTY OF ANY KIND, EITHER EXPRESS OR IMPLIED, INCLUDING, BUT NOT LIMITED TO, THE IMPLIED WARRANTIES OF NON-INFRINGEMENT, MERCHANTABILITY OR FITNESS FOR A PARTICULAR PURPOSE. Some jurisdictions do not allow disclaimer of express or implied warranties in certain transactions, therefore, this statement may not apply to you.

This information could include technical inaccuracies or typographical errors. Changes are periodically made to the information herein; these changes will be incorporated in new editions of the publication. Lenovo may make improvements and/or changes in the products and/or the programs described in this publication at any time without notice.

The products described in this document are not intended for use in implantation or other life support applications where malfunction may result in injury or death to persons. The information contained in this document does not affect or change Lenovo product specifications or warranties. Nothing in this document shall operate as an express or implied license or indemnity under the intellectual property rights of Lenovo or third parties. All information contained in this document was obtained in specific environments and is presented as an illustration. The result obtained in other operating environments may vary.

Lenovo may use or distribute any of the information you supply in any way it believes appropriate without incurring any obligation to you.

Any references in this publication to non-Lenovo Web sites are provided for convenience only and do not in any manner serve as an endorsement of those Web sites. The materials at those Web sites are not part of the materials for this Lenovo product, and use of those Web sites is at your own risk.

Any performance data contained herein was determined in a controlled environment. Therefore, the result obtained in other operating environments may vary significantly. Some measurements may have been made on development-level systems and there is no guarantee that these measurements will be the same on generally available systems. Furthermore, some measurements may have been estimated through extrapolation. Actual results may vary. Users of this document should verify the applicable data for their specific environment.

© Copyright Lenovo 2020

Appendix H. Trademarks

The following terms are trademarks of Lenovo in the United States, other countries, or both:

Lenovo
The Lenovo logo
ThinkStation
The ThinkStation logo

Microsoft, Windows, and Windows Media are trademarks of the Microsoft group of companies.

The terms HDMI and HDMI High-Definition Multimedia Interface are trademarks or registered trademarks of HDMI Licensing LLC in the United States and other countries.

Intel, Thunderbolt, and Xeon are trademarks of Intel Corporation in the U.S. and/or other countries.

Linux is a registered trademark of Linus Torvalds.

DisplayPort and Mini DisplayPort are trademarks of the Video Electronics Standards Association.

Ubuntu is a registered trademark of Canonical Ltd.

USB-C is a trademark of USB Implementers Forum.

Wi-Fi is a registered trademarks of Wi-Fi Alliance.

Other company, product, or service names may be trademarks or service marks of others.

© Copyright Lenovo 2020


Lenovo