

ArenaVision MVF404

MVF404 MHN-SEH2000W/956 B1 SI

ARENAVISION - MASTER MHN-SE High Output - 2000 W - Beam category B1

The ArenaVision MVF404 floodlight – designed for outdoor sports stadiums – dramatically increases the theatrical and emotional impact of sports for TV audiences and spectators, while allowing the players to perform under optimal visual conditions. Thanks to the innovative Philips MHN-SE 2000 W high-output compact single-ended metal-halide lamp and high-tech single-piece precision optics, ArenaVision MVF404 offers much higher optical efficiency than ever before. In addition, this 2 kW floodlight boasts easy lamp fitting and replacement, full IP65 compliance, safety knife connector system and a breakthrough electronic hot-restrike solution – while continuing to deliver all the traditional benefits of Philips ArenaVision systems. The (optional) flicker-free version of ArenaVision MVF404 is designed to ensure that the flicker effect is fully eliminated in order to guarantee perfect images filmed with super-slow-motion cameras at sports events. The flicker-free version of ArenaVision MVF404 comes equipped with a special electronic ignitor, which works in combination with Philips' flicker-free electronic-ballast GearUnits (ECM330), to be ordered separately.

Product data

General Information	
Number of light sources	1 pc
Lamp family code	MHN-SEH [MASTER MHN-SE High Output]
Lamp power	2000 W
Light source color	956 daylight
Kombipack	Lamp(s) included
Gear	-
Optical cover/lens type	Front-glass downlighting version
Protection class IEC	Safety class I

CE mark	CE mark
ENEC mark	ENEC mark
Optic type outdoor	Beam category B1
Aiming memory	-
Product family code	MVF404 [ARENAVISION]

Operating and Electrical	
Lamp supply voltage	400 V [400]
Input Voltage	380 to 415 V

ArenaVision MVF404

Ignitor	Series

Approval and Application

Ingress protection code	IP65 [Dust penetration-protected, jet-proof]
Mech. impact protection code	IK08 [5 J vandal-protected]

Initial Performance (IEC Compliant)

Init. Corr. Color Temperature	5600 K

Product Data

Full product code	872790050200800

Order product name	MVF404 MHN-SEH2000W/956 B1 SI
EAN/UPC - Product	8727900502008
Order code	910502218118
Numerator - Quantity Per Pack	1
Numerator - Packs per outer box	1
Material Nr. (12NC)	910502218118
Net Weight (Piece)	14.500 kg

Dimensional drawing

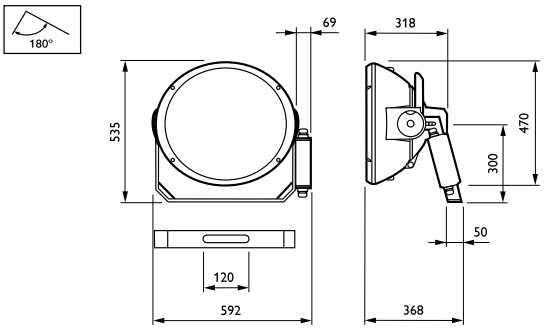

ArenaVision MVF403/MVF404

© 2019 Signify Holding All rights reserved. Signify does not give any representation or warranty as to the accuracy or completeness of the information included herein and shall not be liable for any action in reliance thereon. The information presented in this document is not intended as any commercial offer and does not form part of any quotation or contract, unless otherwise agreed by Signify. Philips and the Philips Shield Emblem are registered trademarks of Koninklijke Philips N.V.