PHILIPS

Lighting



Dynalite Signal Dimmer Controllers

DDBC300-DALI

Signal Dimmer Controller with 3 full universes totalling 192 DALI addresses.

Signal Dimmer Controller with 3 full universes totalling 192 DALI addresses.

Product data

General Information	
CE mark	CE mark
Remarks	Please download the Lighting - Product Data Sheet for more information and ordering options
RoHS mark	RoHS mark

Application Conditions	
Ambient temperature range	0 to +40 °C

Product Data	
Full product code	871016350641800

Order product name	DDBC300-DALI
EAN/UPC – product	8710163506401
Order code	50641800
Numerator – quantity per pack	1
Numerator – packs per outer box	1
Material no. (12NC)	913703031109
Net weight (piece)	0.410 kg

Dynalite Signal Dimmer Controllers

Dimensional drawing

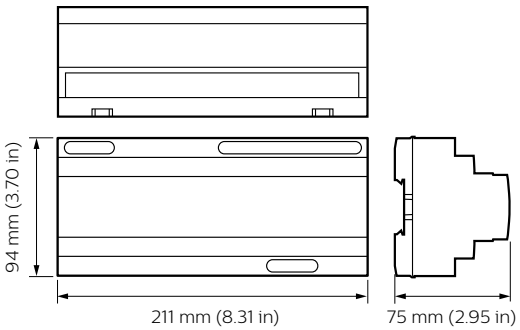

Dynalite Signal Dimmer Controllers

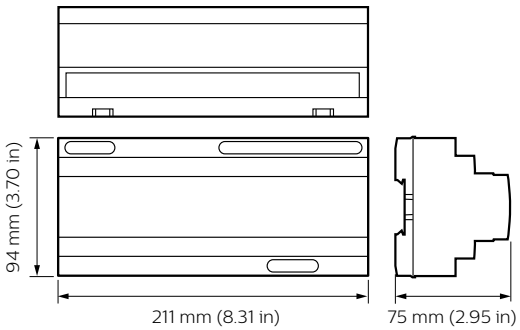

Dynalite Signal Dimmer Controllers

© 2019 Signify Holding All rights reserved. Signify does not give any representation or warranty as to the accuracy or completeness of the information included herein and shall not be liable for any action in reliance thereon. The information presented in this document is not intended as any commercial offer and does not form part of any quotation or contract, unless otherwise agreed by Signify. All trademarks are owned by Signify Holding or their respective owners.