PHILIPS

Lighting



ColorBlast RGBA/ RGBW Powercore gen4

BCP484 36xLED-HB/RGBA 100-277V 10 GR

RGBA - Narrow beam angle 10° - Gray

ColorBlast RGBA/RGBW Powercore gen4 is the next generation of indoor and outdoor floodlighting. Ideally suited for wall washing, grazing and spotlighting, ColorBlast Powercore RGBA gen4 is a high-performance fixture that provides the benefits of fully saturated colors plus amber. All four channels used together expand the available range of colors to include orange and warmer tones. ColorBlast Powercore RGBW gen4 is best suited for pastels, saturated red, and producing white and color light in the same fixture. ColorBlast RGBA/RGBW Powercore gen4 also offers a range of field-configurable beam angles, as well as the flexibility of customization with a full range of accessories that can be used in endless configurations.

Product data

General Information	
Number of light sources	No [-]
Beam angle of light source	10 °
Light source colour	RGBA
Light source replaceable	No
Number of gear units	1 unit
Driver/power unit/transformer	PSDMX [Power supply unit with DMX interface]
Driver included	Yes
Optical cover/lens type	CLFT [Clear flat]

Luminaire light beam spread	10°
Protection class IEC	Safety class I (I)
CE mark	CE mark
ENEC mark	ENEC mark
UL mark	UL and cUL mark
Lifetime to 50% luminous flux	72300 h
Lifetime to 70% luminous flux	72300 h
Lifetime to 90% luminous flux	20100 h
Outdoor optic type	Narrow beam angle 10°
Constant light output	No

ColorBlast RGBA/RGBW Powercore gen4

Accessory PFC	ZCP485

Operating and Electrical

Input voltage	100 to 277 V
Input frequency	50 to 60 Hz
Power factor (nom.)	0.99 @ 120 VAC, 0.91 @ 277 VAC

Controls and Dimming

Dimmable	Yes

Mechanical and Housing

Housing material	Aluminum die–cast
Optic material	Glass
Optical cover/lens material	Tempered glass
Mounting device	Baseplate
Optical cover/lens shape	Flat
Optical cover/lens finish	Clear
Colour	Gray

Approval and Application

Ingress protection code	IP66 [Dust penetration-protected, jet-proof]
Mech. impact protection code	IK10 [20 J vandal-resistant]
Vibration standard	Complies with ANSI C136.31, 3G
	Complies with ANSI C136.31, 3G

Initial Performance (IEC Compliant)

Initial luminous flux	1852 lm
Initial LED luminaire efficacy	38.6 lm/W
Init. Corr. colour temperature	2700 to 4000 K
Initial input power	50 W

Over Time Performance (IEC Compliant)

Lumen Maintenance 50% at 25°C Calculated	100000
Lumen Maintenance 50% at 25°C Reported	54000
Lumen Maintenance 50% at 50°C Calculated	100000
Lumen Maintenance 50% at 50°C Reported	54000
Lumen Maintenance 70% at 25°C Calculated	63300
Lumen Maintenance 70% at 25°C Reported	54000
Lumen Maintenance 70% at 50°C Calculated	63300
Lumen Maintenance 70% at 50°C Reported	54000
Lumen Maintenance 80% at 25°C Calculated	35700
Lumen Maintenance 80% at 25°C Reported	35700
Lumen Maintenance 80% at 50°C Calculated	35700
Lumen Maintenance 80% at 50°C Reported	35700
Lumen Maintenance 90% at 25°C Calculated	11300
Lumen Maintenance 90% at 25°C Reported	11300
Lumen Maintenance 90% at 50°C Calculated	11300
Lumen Maintenance 90% at 50°C Reported	11300

Application Conditions

Ambient temperature range	-40 to +50 °C

Product Data

Full product code	871829138851799
Order product name	BCP484 36xLED-HB/RGBA 100-277V 10 GR
EAN/UPC – product	8718291388517
Order code	38851799
Numerator – quantity per pack	1
Numerator – packs per outer box	2
Material no. (12NC)	912400133549
Net weight (piece)	4.146 kg

Dimensional drawing

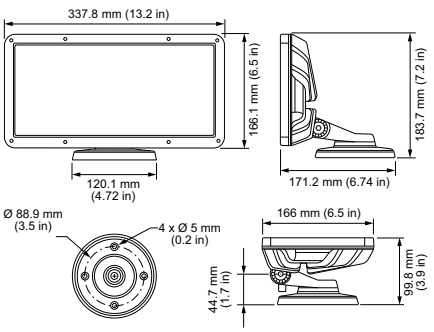

ColorBlast RGBA/RGBW Powercore gen4

ColorBlast RGBA/RGBW Powercore gen4



© 2019 Signify Holding All rights reserved. Signify does not give any representation or warranty as to the accuracy or completeness of the information included herein and shall not be liable for any action in reliance thereon. The information presented in this document is not intended as any commercial offer and does not form part of any quotation or contract, unless otherwise agreed by Signify. All trademarks are owned by Signify Holding or their respective owners.

www.lighting.philips.com
2019, May 2 - data subject to change