PHILIPS

Lighting



ColorBlast IntelliHue Powercore gen4

BCP483 36xLED-HB/RGBMW 100-277V 10 BK

IntelliHue - Narrow beam angle 10° - Black

ColorBlast IntelliHue Powercore gen4 combines precision color control with high-quality tunable white light in one outdoor luminaire for wall-washing and spotlighting applications. IntelliHue, an advanced approach to color control and mixing, produces an enhanced spectrum of precisely controllable light, including millions of saturated colors, pastels, and precisely controllable, high-quality white and tinted white light. By combining carefully selected channels of LED light sources, IntelliHue enables high-quality intelligent color and white light from the same fixture. The fixture's completely flat front lens creates a minimalist, clean design and prevents any water pooling or debris accumulation, so the light is never interrupted. There is a full set of accessories that can be used in combination or alone, including a full-height glare shield, half-glare shield, louver, rock guard, and diffusers to alter the beam from 10° up to 80°.

Product data

General Information	
Beam angle of light source	10 °
Light source colour	IntelliHue
Light source replaceable	No
Number of gear units	1 unit
Driver/power unit/transformer	No [-]
Driver included	Yes
Optical cover/lens type	GT [Tempered glass]
Luminaire light beam spread	10°
Cable	Cable 1.8 m without plug

Protection class IEC	Safety class I (I)
CE mark	CE mark
ENEC mark	ENEC mark
UL mark	UL and cUL mark
Outdoor optic type	Narrow beam angle 10°
Constant light output	No
WEEE mark	-
Accessory PFC	ZCP485

ColorBlast IntelliHue Powercore gen4

Operating and Electrical	
Input voltage	100 to 277 V
Input frequency	50 to 60 Hz
Power factor (nom.)	0.99 @ 120 VAC, 0.88 @ 277 VAC

Controls and Dimming	
Dimmable	Yes

Mechanical and Housing	
Housing material	Aluminum die–cast
Optic material	Glass
Optical cover/lens material	Tempered glass
Optical cover/lens shape	Flat
Optical cover/lens finish	Clear
Colour	Black

Approval and Application	
Ingress protection code	IP66 [Dust penetration-protected, jet-proof]
Mech. impact protection code	IK10 [20 J vandal-resistant]
Vibration standard	Complies with ANSI C136.31, 3G
	Complies with ANSI C136.31, 3G

Initial Performance (IEC Compliant)	
Initial luminous flux	2434 lm
Initial LED luminaire efficacy	50.8 lm/W
Init. Corr. colour temperature	2700 to 4000 K
Init. colour rendering index	80
Initial input power	50 W

Over Time Performance (IEC Compliant)	
Lumen Maintenance 50% at 25°C Calculated	90300
Lumen Maintenance 50% at 25°C Reported	54000
Lumen Maintenance 50% at 50°C Calculated	90300
Lumen Maintenance 50% at 50°C Reported	54000
Lumen Maintenance 70% at 25°C Calculated	46100
Lumen Maintenance 70% at 25°C Reported	46100
Lumen Maintenance 70% at 50°C Calculated	46100
Lumen Maintenance 70% at 50°C Reported	46100
Lumen Maintenance 80% at 25°C Calculated	28600
Lumen Maintenance 80% at 25°C Reported	28600
Lumen Maintenance 80% at 50°C Calculated	28600
Lumen Maintenance 80% at 50°C Reported	28600
Lumen Maintenance 90% at 25°C Calculated	13100
Lumen Maintenance 90% at 25°C Reported	13100
Lumen Maintenance 90% at 50°C Calculated	13100
Lumen Maintenance 90% at 50°C Reported	13100

Application Conditions	
Ambient temperature range	-40 to +50 °C

Product Data	
Full product code	871829138836499
Order product name	BCP483 36xLED-HB/RGBMW 100-277V 10 BK
EAN/UPC – product	8718291388364
Order code	38836499
Numerator – quantity per pack	1
Numerator – packs per outer box	2
Material no. (12NC)	912400130372
Net weight (piece)	4.146 kg

Dimensional drawing

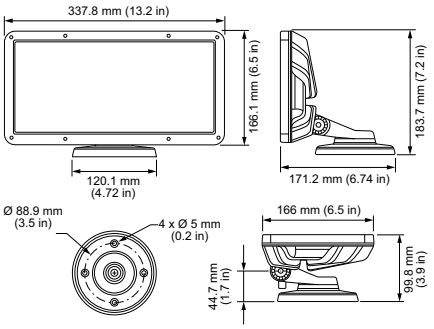

ColorBlast IntelliHue Powercore gen4

ColorBlast IntelliHue Powercore gen4

© 2019 Signify Holding All rights reserved. Signify does not give any representation or warranty as to the accuracy or completeness of the information included herein and shall not be liable for any action in reliance thereon. The information presented in this document is not intended as any commercial offer and does not form part of any quotation or contract, unless otherwise agreed by Signify. All trademarks are owned by Signify Holding or their respective owners.

www.lighting.philips.com
2019, May 2 - data subject to change