PHILIPS

Lighting



GreenSpace Accent Projector

ST315T LED27S/PW930 PSU FR30 BK

GREENSPACE ACCENT PROJECTOR MINI - - - - - Power supply unit - Medium beam - Black

Thanks to the GreenSpace Accent family, retailers and building operators can now make the switch from CDM to LED and enjoy the benefits of Philips PerfectAccent light quality as well as significant energy savings – all for a reasonable initial investment. GreenSpace Accent Projector's regular 3C adaptor and specific lumen packages make retrofit installation quick and easy. For fashion and food retailers, GreenSpace Accent Projector is available with special light flavors and LED recipes to show the clothes and fresh food produce on offer in the very best light. Check out our Fashion and Food catalogue pages to find out more about CrispWhite, PremiumWhite, Fresh Food Meat and Fresh Food Champagne.

Product data

General Information	
Lamp family code	-
Beam angle of light source	120 °
Light source color	-
Cap-Base	- [-]
Light source replaceable	No
Number of gear units	1 unit
Driver/power unit/transformer	Power supply unit
Driver included	Yes
Optic type	Medium beam
Optical cover/lens type	Polymethyl methacrylate bowl/cover
Luminaire light beam spread	-

Connection	-
Cable	-
Protection class IEC	Safety class I
Glow-wire test	Temperature 650 °C, duration 5 s
Flammability mark	-
CE mark	CE mark
ENEC mark	ENEC mark
UL mark	-
Warranty period	5 years
Constant light output	No
Number of products on MCB of 16 A type B	34
RoHS mark	RoHS mark

GreenSpace Accent Projector

Product family code	ST315T [GREENSPACE ACCENT PROJECTOR MINI]

Operating and Electrical

Input Voltage	220 to 240 V
Input Frequency	50 to 60 Hz
Initial CLO power consumption	- W W
Average CLO power consumption	- W W
Inrush current	18 A
Inrush time	0.25 ms
Power Factor (Min)	0.29

Controls and Dimming

Dimmable	No

Mechanical and Housing

Reflector material	Polycarbonate aluminum coated
Optic material	Polycarbonate
Optical cover/lens material	Polymethyl methacrylate
Fixation material	-
Optical cover/lens finish	Clear
Overall length	181 mm
Overall width	80 mm
Overall height	250 mm
Overall diameter	80 mm
Diameter	-
Color	Black

Approval and Application

Ingress protection code	IP20 [Finger-protected]
Mech. impact protection code	IK02 [0.2 J standard]

Initial Performance (IEC Compliant)

Initial luminous flux (system flux)	2700 lm
Luminous flux tolerance	+/-10%
Initial LED luminaire efficacy	96 lm/W
Init. Corr. Color Temperature	3000 K
Init. Color Rendering Index	≥90
Initial chromaticity	(0.42, 0.38) SDCM<3
Initial input power	28 W
Power consumption tolerance	+/-10%

Over Time Performance (IEC Compliant)

Control gear failure rate at median useful life 50000 h	5 %
Median useful life L70B50	70000 h
Median useful life L80B50	50000 h
Median useful life L90B50	25000 h
Lumen maintenance at median useful life* 50000 h	L80

Application Conditions

Ambient temperature range	+10 to +40 °C
Performance ambient temperature Tq	25 °C
Suitable for random switching	Not applicable

Product Data

Full product code	871869940915900
Order product name	ST315T LED27S/PW930 PSU FR30 BK
EAN/UPC - Product	8718699409159
Order code	910500465638
Numerator - Quantity Per Pack	1
Numerator - Packs per outer box	1
Material Nr. (12NC)	910500465638
Net Weight (Piece)	0.724 kg

650°C IP 20 IK 02

Dimensional drawing

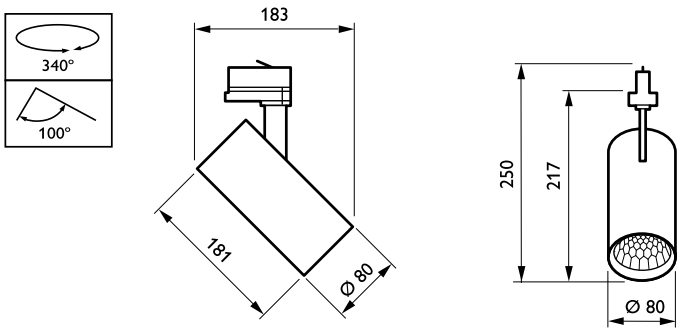

GreenSpace Accent ST315T-ST330T

GreenSpace Accent Projector

Photometric data

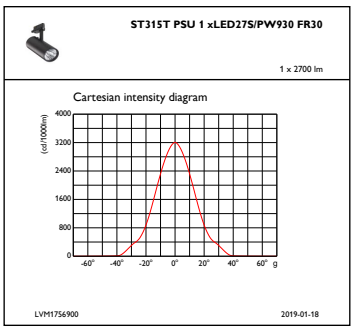

IFCC1_

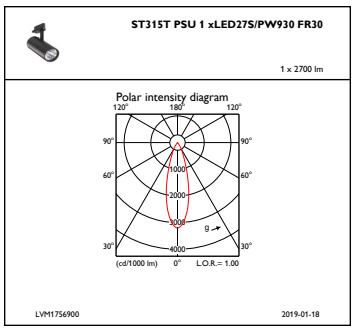

IFPC1_

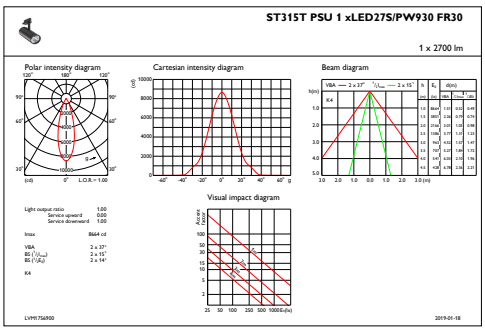

IFAS1_

© 2019 Signify Holding All rights reserved. Signify does not give any representation or warranty as to the accuracy or completeness of the information included herein and shall not be liable for any action in reliance thereon. The information presented in this document is not intended as any commercial offer and does not form part of any quotation or contract, unless otherwise agreed by Signify. Philips and the Philips Shield Emblem are registered trademarks of Koninklijke Philips N.V.