PHILIPS

Lighting



# GreenSpace Accent Projector

## ST315T LED27S/PW930 PSU FR24 BK

GREENSPACE ACCENT PROJECTOR MINI - - - - - Power supply unit - Medium beam - Black

Thanks to the GreenSpace Accent family, retailers and building operators can now make the switch from CDM to LED and enjoy the benefits of Philips PerfectAccent light quality as well as significant energy savings – all for a reasonable initial investment. GreenSpace Accent Projector's regular 3C adaptor and specific lumen packages make retrofit installation quick and easy. For fashion and food retailers, GreenSpace Accent Projector is available with special light flavors and LED recipes to show the clothes and fresh food produce on offer in the very best light. Check out our Fashion and Food catalogue pages to find out more about CrispWhite, PremiumWhite, Fresh Food Meat and Fresh Food Champagne.

### Product data

| General Information | |
|---|---|
| **Lamp family code** | - |
| **Beam angle of light source** | 120 ° |
| **Light source color** | - |
| **Cap-Base** | - [ -] |
| **Light source replaceable** | No |
| **Number of gear units** | 1 unit |
| **Driver/power unit/transformer** | Power supply unit |
| **Driver included** | Yes |
| **Optic type** | Medium beam |
| **Optical cover/lens type** | Polymethyl methacrylate bowl/cover |
| **Luminaire light beam spread** | - |

| | |
|---|---|
| **Connection** | - |
| **Cable** | - |
| **Protection class IEC** | Safety class I |
| **Glow-wire test** | Temperature 650 °C, duration 5 s |
| **Flammability mark** | - |
| **CE mark** | CE mark |
| **ENEC mark** | ENEC mark |
| **UL mark** | - |
| **Warranty period** | 5 years |
| **Constant light output** | No |
| **Number of products on MCB of 16 A type B** | 34 |
| **RoHS mark** | RoHS mark |

# GreenSpace Accent Projector

| | |
|---|---|
| **Product family code** | ST315T [ GREENSPACE ACCENT PROJECTOR MINI] |

## Operating and Electrical

| | |
|---|---|
| **Input Voltage** | 220 to 240 V |
| **Input Frequency** | 50 to 60 Hz |
| **Initial CLO power consumption** | - W W |
| **Average CLO power consumption** | - W W |
| **Inrush current** | 18 A |
| **Inrush time** | 0.25 ms |
| **Power Factor (Min)** | 0.19 |

## Controls and Dimming

| | |
|---|---|
| **Dimmable** | No |

## Mechanical and Housing

| | |
|---|---|
| **Reflector material** | Polycarbonate aluminum coated |
| **Optic material** | Polycarbonate |
| **Optical cover/lens material** | Polymethyl methacrylate |
| **Fixation material** | - |
| **Optical cover/lens finish** | Clear |
| **Overall length** | 181 mm |
| **Overall width** | 80 mm |
| **Overall height** | 250 mm |
| **Overall diameter** | 80 mm |
| **Diameter** | - |
| **Color** | Black |

## Approval and Application

| | |
|---|---|
| **Ingress protection code** | IP20 [ Finger-protected] |
| **Mech. impact protection code** | IK02 [ 0.2 J standard] |

## Initial Performance (IEC Compliant)

| | |
|---|---|
| **Initial luminous flux (system flux)** | 2700 lm |
| **Luminous flux tolerance** | +/-10% |
| **Initial LED luminaire efficacy** | 96 lm/W |
| **Init. Corr. Color Temperature** | 3000 K |
| **Init. Color Rendering Index** | ≥90 |
| **Initial chromaticity** | (0.42, 0.38) SDCM<3 |
| **Initial input power** | 28 W |
| **Power consumption tolerance** | +/-10% |

## Over Time Performance (IEC Compliant)

| | |
|---|---|
| **Control gear failure rate at median useful life 50000 h** | 5 % |
| **Median useful life L70B50** | 70000 h |
| **Median useful life L80B50** | 50000 h |
| **Median useful life L90B50** | 25000 h |
| **Lumen maintenance at median useful life* 50000 h** | L80 |

## Application Conditions

| | |
|---|---|
| **Ambient temperature range** | +10 to +40 °C |
| **Performance ambient temperature Tq** | 25 °C |
| **Suitable for random switching** | Not applicable |

## Product Data

| | |
|---|---|
| **Full product code** | 871869940913500 |
| **Order product name** | ST315T LED27S/PW930 PSU FR24 BK |
| **EAN/UPC - Product** | 8718699409135 |
| **Order code** | 910500465636 |
| **Numerator - Quantity Per Pack** | 1 |
| **Numerator - Packs per outer box** | 1 |
| **Material Nr. (12NC)** | 910500465636 |
| **Net Weight (Piece)** | 0.724 kg |

650°C IP 20 IK 02

## Dimensional drawing

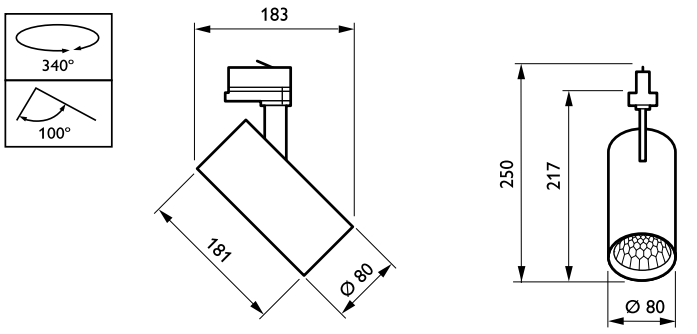


GreenSpace Accent ST315T-ST330T

# GreenSpace Accent Projector

## Photometric data

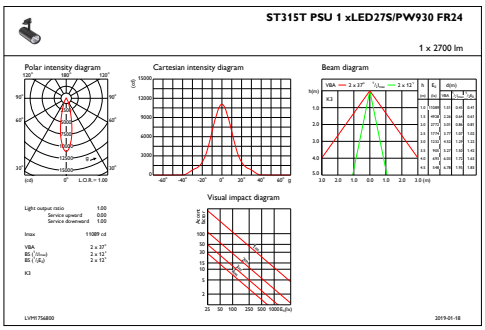


IFAS1_

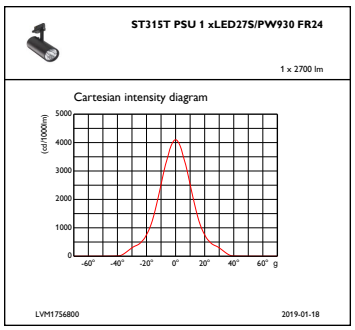


IFCC1_

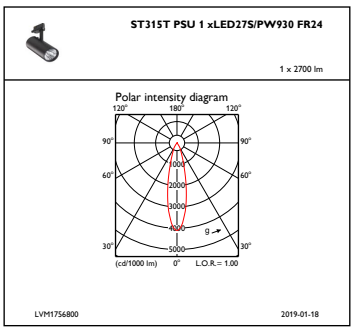


IFPC1_

© 2019 Signify Holding All rights reserved. Signify does not give any representation or warranty as to the accuracy or completeness of the information included herein and shall not be liable for any action in reliance thereon. The information presented in this document is not intended as any commercial offer and does not form part of any quotation or contract, unless otherwise agreed by Signify. Philips and the Philips Shield Emblem are registered trademarks of Koninklijke Philips N.V.