

iColor Cove MX Powercore

LS421XLED3-/RGB 100-240V WB L1219 UL/CE

Red, green and blue - 125° x 120° - Wide beam - 1219 mm - White

iColor Cove MX Powercore high-intensity LED lighting fixtures afford virtually limitless options for filling indoor alcoves and accent spaces with vibrant light. As the premium member of the iColor Cove family of intelligent color-changing cove lights, this compact, high-performance fixture is also ideally suited for backlighting and cost-effective indoor wall grazing. iColor Cove MX Powercore combines professional-grade color mixing and maximized output with the efficiency and cost-effectiveness provided by Powercore.Integrated Powercore technology ensures rapid, efficient and accurate control of power output to the fixture directly from line voltage, eliminating the need for external power supplies. Use of standard wiring dramatically simplifies installation and helps lower total system cost.

Product data

General Information	
Lamp family code	LED3 [LED Module 300 lm]
Light source colour	Red, green and blue
Light source replaceable	No
Driver included	Yes
Optic type	WB [Wide beam]
Luminaire light beam spread	125° x 120°
Protection class IEC	Safety class I (I)
Glow-wire test	850/5 [Temperature 850 °C, duration 5 s]
CE mark	CE mark
UL mark	UL and cUL mark

Operating and Electrical	
Input voltage	100 to 240 V
Input frequency	50 to 60 Hz

Controls and Dimming	
Dimmable	Yes

Mechanical and Housing	
Housing material	Aluminum die–cast

iColor Cove MX Powercore

Optical cover/lens material	Polycarbonate
Length	1219 mm
Colour	White

Approval and Application

Ingress protection code	IP20 [Finger-protected]
Mech. impact protection code	IK02 [0.2 J standard]

Initial Performance (IEC Compliant)

Initial input power	12 W

Over Time Performance (IEC Compliant)

Lumen Maintenance 50% at 25°C Reported	100000
Lumen Maintenance 50% at 50°C Reported	90000

Application Conditions

Ambient temperature range	-20 to +50 °C
Maximum dimming level	0% (digital)

Product Data

Full product code	871829138352999
Order product name	LS421XLED3-/RGB 100-240V WB L1219 UL/CE
EAN/UPC – product	8718291383529
Order code	38352999
Numerator – quantity per pack	1
Numerator – packs per outer box	6
Material no. (12NC)	910503702587
Net weight (piece)	1.850 kg

Dimensional drawing

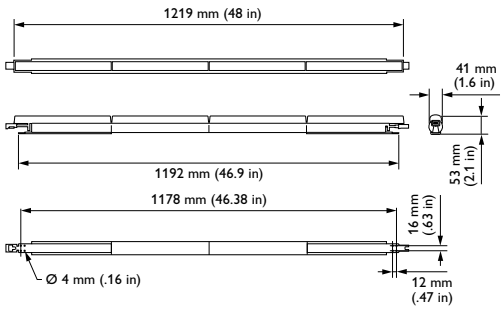

iColor Cove MX Powercore

© 2019 Signify Holding All rights reserved. Signify does not give any representation or warranty as to the accuracy or completeness of the information included herein and shall not be liable for any action in reliance thereon. The information presented in this document is not intended as any commercial offer and does not form part of any quotation or contract, unless otherwise agreed by Signify. All trademarks are owned by Signify Holding or their respective owners.