

3-circuit Square RCS750

ZRS750 TCPL WH (XTS39-3)

3-circuit track - T-coupling piece left - T-COUPLER LEFT

The RCS750 3-circuit square track system is made up of a solid aluminium track available in lengths of 1, 2, 3 and 4 m with four electrical conductors. Any given configuration can be created easily: horizontal or vertical, mounted on or in the ceiling, on the wall or on free-standing panels. The system can also be used as a floating structure. All luminaires have a separate power supply and can be switched selectively. They can be moved easily to change the lighting and presentation. In this way, a multifunctional track system can be created for accent lighting as well as for suspending advertising and decorative material. A range of adaptors, power supply connections and mounting accessories is also available.

Product data

General Information	
Type description	T-COUPLER LEFT
Suspension accessories	No [-]
Mechanical accessories	No [-]
Accessory colour	White

Operating and Electrical	
Electrical accessories	TCPL [T-coupling piece left]
Circuit	3C [3-circuit track]

Mechanical and Housing	
Dimensions (height x width x depth)	NaN x NaN x NaN mm (NaN x NaN x NaN in)

Product Data	
Full product code	871155938132999
Order product name	ZRS750 TCPL WH (XTS39-3)
EAN/UPC – product	8711559381329
Order code	38132999
Local Code	ZCS750TCPLWH
Numerator – quantity per pack	1
Numerator – packs per outer box	5
Material no. (12NC)	910500188115
Net weight (piece)	0.160 kg

3-circuit Square RCS750

Dimensional drawing

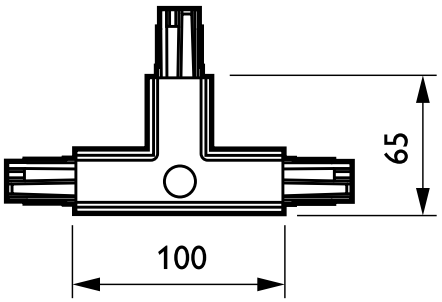

3-circuit square acc. ZRS750

© 2019 Signify Holding All rights reserved. Signify does not give any representation or warranty as to the accuracy or completeness of the information included herein and shall not be liable for any action in reliance thereon. The information presented in this document is not intended as any commercial offer and does not form part of any quotation or contract, unless otherwise agreed by Signify. Philips and the Philips Shield Emblem are registered trademarks of Koninklijke Philips N.V.