EOB7S01X



EN Steam oven

User Manual

Get the most out of your appliance

For your digital manual, how-to videos and support visit **electrolux.com/getstarted**

Electrolux

CONTENTS

1. SAFETY INFORMATION....3
2. SAFETY INSTRUCTIONS....4
3. PRODUCT DESCRIPTION....7
4. CONTROL PANEL....8
5. BEFORE FIRST USE....9
6. DAILY USE....10
7. CLOCK FUNCTIONS....13
8. AUTOMATIC PROGRAMMES....15
9. USING THE ACCESSORIES....16
10. ADDITIONAL FUNCTIONS....19
11. HINTS AND TIPS....21
12. CARE AND CLEANING....40
13. TROUBLESHOOTING....44
14. ENERGY EFFICIENCY....46

WE'RE THINKING OF YOU

Thank you for purchasing an Electrolux appliance. You've chosen a product that brings with it decades of professional experience and innovation. Ingenious and stylish, it has been designed with you in mind. So whenever you use it, you can be safe in the knowledge that you'll get great results every time.
Welcome to Electrolux.
Visit our website for:

Get usage advice, brochures, trouble shooter, service information:
www.electrolux.com/webselfservice

Register your product for better service:
www.registerelectrolux.com

Buy Accessories, Consumables and Original spare parts for your appliance:
www.electrolux.com/shop

CUSTOMER CARE AND SERVICE

Always use original spare parts.
When contacting our Authorised Service Centre, ensure that you have the following data available: Model, PNC, Serial Number.
The information can be found on the rating plate.

⚠ Warning / Caution-Safety information
ⓘ General information and tips
Environmental information

Subject to change without notice.

1. ⚠ SAFETY INFORMATION

Before the installation and use of the appliance, carefully read the supplied instructions. The manufacturer is not responsible for any injuries or damages that are the result of incorrect installation or usage. Always keep the instructions in a safe and accessible location for future reference.

1.1 Children and vulnerable people safety

- This appliance can be used by children aged from 8 years and above and persons with reduced physical, sensory or mental capabilities or lack of experience and knowledge if they have been given supervision or instruction concerning the use of the appliance in a safe way and understand the hazards involved.
- Children between 3 and 8 years of age and persons with very extensive and complex disabilities shall be kept away from the appliance unless continuously supervised.
- Children of less than 3 years of age should be kept away from the appliance unless continuously supervised.
- Do not let children play with the appliance.
- Keep all packaging away from children and dispose of it appropriately.
- Keep children and pets away from the appliance when it operates or when it cools down. Accessible parts are hot.
- If the appliance has a child safety device, it should be activated.
- Children shall not carry out cleaning and user maintenance of the appliance without supervision.

1.2 General Safety

- Only a qualified person must install this appliance and replace the cable.

- WARNING: The appliance and its accessible parts become hot during use. Care should be taken to avoid touching heating elements.
- Always use oven gloves to remove or put in accessories or ovenware.
- Before carrying out any maintenance, disconnect the appliance from the power supply.
- Ensure that the appliance is switched off before replacing the lamp to avoid the possibility of electric shock.
- Do not use the appliance before installing it in the built-in structure.
- Do not use a steam cleaner to clean the appliance.
- Do not use harsh abrasive cleaners or sharp metal scrapers to clean the glass door since they can scratch the surface, which may result in shattering of the glass.
- If the mains power supply cable is damaged, it must be replaced by the manufacturer, its Authorised Service Centre or similarly qualified persons to avoid an electrical hazard.
- To remove the shelf supports first pull the front of the shelf support and then the rear end away from the side walls. Install the shelf supports in the opposite sequence.
- Use only the food sensor (core temperature sensor) recommended for this appliance.

2. SAFETY INSTRUCTIONS

2.1 Installation

WARNING!
Only a qualified person must install this appliance.

- Remove all the packaging.
- Do not install or use a damaged appliance.
- Follow the installation instructions supplied with the appliance.
- Always take care when moving the appliance as it is heavy. Always use safety gloves and enclosed footwear.
- Do not pull the appliance by the handle.
- Keep the minimum distance from other appliances and units.
- Install the appliance in a safe and suitable place that meets installation requirements.
- The appliance is equipped with an electric cooling system. It must be

operated with the electric power supply.

2.2 Electrical connection

WARNING!
Risk of fire and electric shock.

- All electrical connections should be made by a qualified electrician.
- The appliance must be earthed.
- Make sure that the parameters on the rating plate are compatible with the electrical ratings of the mains power supply.
- Always use a correctly installed shockproof socket.
- Do not use multi-plug adapters and extension cables.
- Make sure not to cause damage to the mains plug and to the mains cable. Should the mains cable need to be replaced, this must be carried out by our Authorised Service Centre.
- Do not let mains cables touch or come near the appliance door or the niche below the appliance, especially when it operates or the door is hot.
- The shock protection of live and insulated parts must be fastened in such a way that it cannot be removed without tools.
- Connect the mains plug to the mains socket only at the end of the installation. Make sure that there is access to the mains plug after the installation.
- If the mains socket is loose, do not connect the mains plug.
- Do not pull the mains cable to disconnect the appliance. Always pull the mains plug.
- Use only correct isolation devices: line protecting cut-outs, fuses (screw type fuses removed from the holder), earth leakage trips and contactors.
- The electrical installation must have an isolation device which lets you disconnect the appliance from the mains at all poles. The isolation device must have a contact opening width of minimum 3 mm.
- This appliance complies with the E.E.C. Directives.

2.3 Use

WARNING!
Risk of injury, burns and electric shock or explosion.

- This appliance is for household use only.
- Do not change the specification of this appliance.
- Make sure that the ventilation openings are not blocked.
- Do not let the appliance stay unattended during operation.
- Deactivate the appliance after each use.
- Be careful when you open the appliance door while the appliance is in operation. Hot air can release.
- Do not operate the appliance with wet hands or when it has contact with water.
- Do not apply pressure on the open door.
- Do not use the appliance as a work surface or as a storage surface.
- Open the appliance door carefully. The use of ingredients with alcohol can cause a mixture of alcohol and air.
- Do not let sparks or open flames to come in contact with the appliance when you open the door.
- Do not put flammable products or items that are wet with flammable products in, near or on the appliance.

WARNING!
Risk of damage to the appliance.

- To prevent damage or discoloration to the enamel:
  - do not put ovenware or other objects in the appliance directly on the bottom.
  - do not put aluminium foil directly on the bottom of cavity of the appliance.
  - do not put water directly into the hot appliance.
  - do not keep moist dishes and food in the appliance after you finish the cooking.
  - be careful when you remove or install the accessories.

- Discoloration of the enamel or stainless steel has no effect on the performance of the appliance.
- Use a deep pan for moist cakes. Fruit juices cause stains that can be permanent.
- This appliance is for cooking purposes only. It must not be used for other purposes, for example room heating.
- Always cook with the oven door closed.
- If the appliance is installed behind a furniture panel (e.g. a door) make sure the door is never closed when the appliance is in operation. Heat and moisture can build up behind a closed furniture panel and cause subsequent damage to the appliance, the housing unit or the floor. Do not close the furniture panel until the appliance has cooled down completely after use.

2.4 Steam Cooking

WARNING!
Risk of burns and damage to the appliance.

- Released Steam can cause burns:
  - Be careful when you open the appliance door when the function is activated. Steam can release.
  - Open the appliance door with care after the steam cooking operation.

2.5 Care and cleaning

WARNING!
Risk of injury, fire, or damage to the appliance.

- Before maintenance, deactivate the appliance and disconnect the mains plug from the mains socket.
- Make sure the appliance is cold. There is the risk that the glass panels can break.
- Replace immediately the door glass panels when they are damaged. Contact the Authorised Service Centre.
- Be careful when you remove the door from the appliance. The door is heavy!
- Clean regularly the appliance to prevent the deterioration of the surface material.
- Clean the appliance with a moist soft cloth. Only use neutral detergents. Do not use any abrasive products, abrasive cleaning pads, solvents or metal objects.
- If you use an oven spray, follow the safety instruction on it's packaging.
- Do not clean the catalytic enamel (if applicable) with any kind of detergent.

2.6 Internal lighting

WARNING!
Risk of electric shock.

- The type of light bulb or halogen lamp used for this appliance is for household appliances only. Do not use it for house lighting.
- Before replacing the lamp, disconnect the appliance from the power supply.
- Only use lamps with the same specifications.

2.7 Service

- To repair the appliance contact the Authorised Service Centre.
- Use original spare parts only.

2.8 Disposal

WARNING!
Risk of injury or suffocation.

- Disconnect the appliance from the mains supply.
- Cut off the mains electrical cable close to the appliance and dispose of it.
- Remove the door catch to prevent children or pets from becoming trapped in the appliance.

3. PRODUCT DESCRIPTION

3.1 General overview

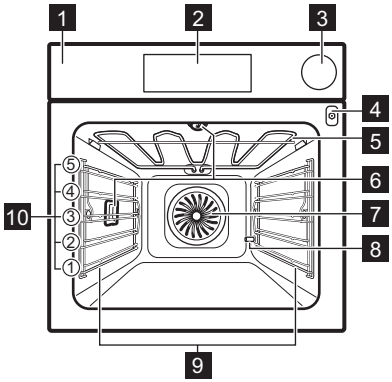

1 Control panel
2 Electronic programmer
3 Water drawer
4 Socket for the core temperature sensor
5 Heating element
6 Lamp
7 Fan
8 Descaling pipe outlet
9 Shelf support, removable
10 Shelf positions

3.2 Accessories

Wire shelf

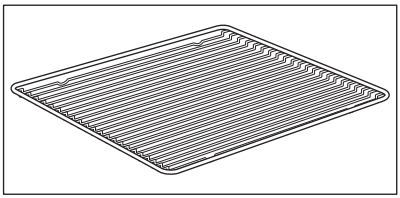

For cookware, cake tins, roasts.

Baking tray

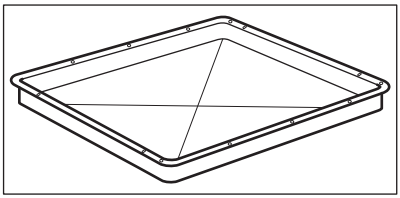

For cakes and biscuits.

Grill- / Roasting pan

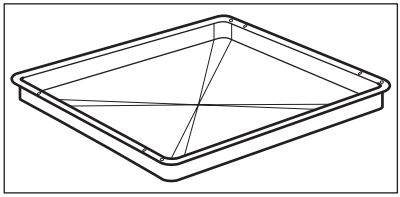

To bake and roast or as a pan to collect fat.

Food Sensor

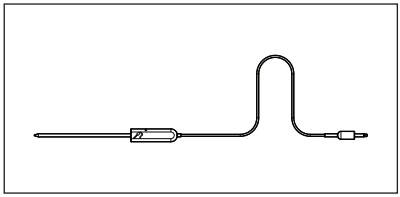

To measure the temperature inside food.

4. CONTROL PANEL

4.1 Electronic programmer

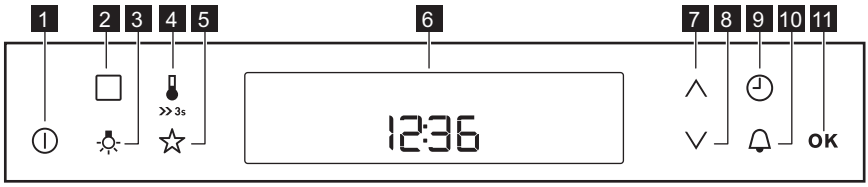

Use the sensor fields to operate the appliance.

	Sensor Field	Function	Description
1		ON / OFF	To turn the oven on and off.
2		OPTIONS	To set a heating function, a cleaning function or an automatic programme.
3		OVEN LIGHT	To turn the oven lamp on and off.
4	>>3s	TEMPERATURE	To set and examine the cavity temperature or the core temperature sensor temperature (if present).
5		MY FAVOURITE PROGRAMME	To store your favourite programme. Use it to access your favourite programme directly, also when the oven is off.
6	-	DISPLAY	Shows the current settings of the oven.
7		UP	To move up in the menu.
8		DOWN	To move down in the menu.
9		CLOCK	To set the clock functions.
10		MINUTE MINDER	To set the Minute Minder.
11	OK	OK	To confirm the selection or setting.

4.2 Display

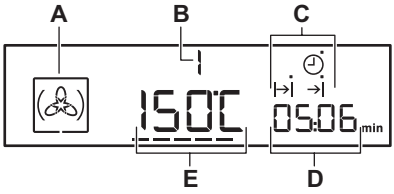

A. Heating function symbol
B. Number of the heating function / programme
C. Indicators for the clock functions (refer to "Clock functions" table)
D. Clock / residual heat display
E. Temperature / time of day display

Other indicators of the display:

Symbol	Name	Description
	Automatic programme	You can choose an automatic programme.
☆	**My favourite programme**	The favourite programme works.
h / min	**h / min**	A clock function works.
___	**Heat-up / residual heat indicator**	Shows the temperature level of the oven.
	Temperature	You can examine or change the temperature.
	Core temperature sensor	The core temperature sensor is in the core temperature sensor socket.
	Minute minder	The minute minder function works.
	Water drawer indicator	Shows the water level.

4.3 Heat up indicator

If you turn on the heating function, ___ appears. The bars show that the temperature in the oven increases or decreases.

When the oven is at the set temperature, the bars go off the display.

5. BEFORE FIRST USE

WARNING!
Refer to Safety chapters.

To set the Time of day refer to "Clock functions" chapter.

5.1 Initial Cleaning

Remove all accessories and removable shelf supports from the oven.

Refer to "Care and cleaning" chapter.

Clean the oven and the accessories before the first use.
Put the accessories and the removable shelf supports back to their initial position.

5.2 Setting the water hardness

When you connect the oven to the mains you have to set the water hardness level.

The table below shows the water hardness range (dH) with the corresponding Calcium deposit and the quality of the water.

Water hardness		Calcium deposit (mmol/l)	Calcium deposit (mg/l)	Water classification
Class	dH			
1	0 - 7	0 - 1.3	0 - 50	Soft
2	7 - 14	1.3 - 2.5	50 - 100	Moderately hard
3	14 - 21	2.5 - 3.8	100 - 150	Hard
4	over 21	over 3.8	over 150	Very hard

When the water hardness exceeds the values in the table, fill the water drawer with bottled water.

1. Take the 4 colour change strip supplied with the steam set in the oven.
2. Put all the reaction zones of the strip into the water for approximately 1 second.
   Do not put the strip into the running water.
3. Shake the strip to remove the excess of the water.
4. Wait 1 minute and check the water hardness with the table below.
   The colours of the reaction zones continue to change. Do not check the water hardness later than 1 minute after test.
5. Set the water hardness: settings menu.

Refer to the "Additional functions" chapter, Using the settings menu.

Test strip	Water Hardness
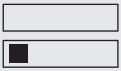	1
	2
	3
	4

You can change the water hardness in the settings menu.

6. DAILY USE

WARNING!
Refer to Safety chapters.

6.1 Heating functions

Oven function	Application
 True Fan Cooking	To bake on up to three shelf positions at the same time and to dry food. Set the temperature 20 - 40 °C lower than for Conventional Cooking.

Oven function	Application
 Pizza Setting	To bake pizza. To make intensive browning and a crispy bottom.
 Slow Cooking	To prepare tender, succulent roasts.

Oven function	Application
 Conventional Cooking (Top / Bottom Heat)	To bake and roast food on one shelf position.
 Frozen Foods	To make convenience food (e.g. french fries, potato wedges or spring rolls) crispy.
 Turbo Grilling	To roast larger meat joints or poultry with bones on one shelf position. To make gratins and to brown.
 Grilling	To grill flat food and to toast bread.
 Fast Grilling	To grill flat food in large quantities and to toast bread.
 Keep Warm	To keep food warm.
 Bottom Heat	To bake cakes with crispy bottom and to preserve food.
 Defrost	To defrost food (vegetables and fruit). The defrosting time depends on the amount and size of the frozen food.

Oven function	Application
 Moist Fan Baking	This function is designed to save energy during cooking. For the cooking instructions refer to "Hints and tips" chapter, Moist Fan Baking. The oven door should be closed during cooking so that the function is not interrupted and to ensure that the oven operates with the highest energy efficiency possible. When you use this function, the temperature in the cavity may differ from the set temperature. The residual heat is used.The heating power may be reduced. For general energy saving recommendations refer to "Energy Efficiency" chapter, Energy Saving.This function was used to comply with the energy efficiency class according to EN 60350-1. When you use this function the lamp automatically turns off after 30 seconds.
 Bread Baking	Use this function to prepare bread and bread rolls with a very good professional-like result in terms of crispiness, colour and crust gloss.

Oven function	Application
 Steam Regenerating	Food reheating with steam prevents surface drying. Heat is distributed in a gentle and even way, which allows to recover taste and aroma of food as just prepared. This function can be used to reheat food directly on a plate. You can reheat more than one plate at the same time, using different shelf positions.
 Humidity Low	To bake bread, roast large pieces of meat or to warm up chilled and frozen meals.
 Humidity High	For dishes with a high moisture content, custard royale and terrines, and for poaching fish.
 Full Steam	For vegetables, fish, potatoes, rice, pasta or special side-dishes.

The lamp may turn off automatically at a temperature below 60 °C during some oven functions.

6.2 Setting the heating function

1. Turn on the oven with ⏻.

The display shows the set temperature, the symbol and the number of the heating function.

2. Press ∧ or ∨ to set a heating function.
3. Press OK or the oven starts automatically after 5 seconds.

If you turn on the oven and do not set any heating function or programme, the oven turns off automatically after 20 seconds.

6.3 Changing the temperature

Press ∧ or ∨ to change the temperature in steps: 5 °C.
When the oven is at the set temperature a signal sounds and the Heat up indicator disappears.

6.4 Checking the temperature

You can check the current temperature in the oven when the function or programme works.

1. Press »3s.

The display shows the temperature in the oven.

2. Press OK or the display shows again the set temperature automatically after 5 seconds.

6.5 Fast Heat Up

Do not put food in the oven when the Fast heat up works.

The Fast Heat Up is available only for some heating functions. If Faulty Tone is turned on in the settings menu, the signal sounds if the Fast Heat Up is not available for the set function. Refer to "Additional functions" chapter, Using the settings menu.

The Fast Heat Up decreases the heat up time.

To turn on the Fast Heat Up press and hold »3s for more than 3 seconds.
If the Fast Heat Up is turned on the display shows flashing bars.

6.6 Steam cooking

The water drawer cover is in the control panel.

WARNING!
Use only cold tap water. Do not use filtered (demineralised) or distilled water. Do not use other liquids. Do not put flammable or alcoholic liquids into the water drawer.

1. Press the cover of the water drawer to open it.
2. Fill the water drawer with cold water to the maximum level (around 950 ml) until the signal sounds or the display shows the message.
   The water supply is sufficient for approximately 50 minutes.
   Do not fill the water drawer over its maximum capacity. There is a risk of water leakage, overflow and furniture damages.
3. Push the water drawer to its initial position.
4. Turn on the oven.
5. Set a steam heating function and the temperature.
6. If necessary, set the function:
   Duration |→| or: End Time →|.

The steam appears after approximately 2 minutes. When the oven reaches the set temperature, the signal sounds.
When the water drawer is running out of water, the signal sounds and the water drawer needs to be refilled to continue the steam cooking as described above.

The signal sounds at the end of the cooking time.

7. Turn off the oven.
8. Empty the water drawer after the steam cooking is completed.
   Refer to the cleaning function: Tank Emptying.



CAUTION!
The oven is hot. There is a risk of burns. Be careful when you empty the water drawer.

9. After Steam Cooking steam can condensate on the bottom of the cavity. Always dry the bottom of the cavity when the oven is cool.

Let the oven dry fully with the door open.

To speed up the drying you can close the door and heat up the oven with the function: True Fan Cooking at temperature 150°C for approximately 15 minutes.

7. CLOCK FUNCTIONS

7.1 Clock functions table

Clock function		Application
🕘	TIME OF DAY	To show or change the time of day. You can change the time of day only when the oven is on.
|→|	DURATION	To set how long the oven works.
→|	END	To set when the oven turns off.
|→|→|	TIME DELAY	To combine DURATION and END function.
🔔	MINUTE MINDER	To set a countdown time. This function has no effect on the operation of the oven. You can set the MINUTE MINDER at any time and also when the oven is off.
00:00	COUNT UP TIMER	To set the count up, which shows how long the oven works. This function has no effect on the operation of the oven. It is on immediately when the oven starts to heat. The COUNT UP TIMER is not turned on if DURATION and END are set.

7.2 Setting and changing the time

After the first connection to the mains, wait until the display shows h and **12:00**. "**12**" flashes.

1. Press ∧ or ∨ to set the hours.
2. Press OK.
3. Press ∧ or ∨ to set the minutes.
4. Press OK.

The display shows the new time.

To change the time of day press ◴ again and again until ◴ starts to flash.

7.3 Setting the DURATION

1. Set a heating function and temperature.
2. Press ◴ again and again until |→| starts to flash.
3. Press ∧ or ∨ to set the minutes for DURATION.
4. Press OK or the DURATION starts automatically after 5 seconds.
5. Press ∧ or ∨ to set the hours for DURATION.
6. Press OK or the DURATION starts automatically after 5 seconds.

When the set time ends, the signal sounds for 2 minutes. The display shows flashing |→| and time setting. The oven turns off.

7. Press a sensor field to stop the signal.
8. Turn off the oven.

7.4 Setting the END

1. Set a heating function and temperature.
2. Press ◴ again and again until →| starts to flash.
3. Press ∧ or ∨ to set the END and press OK. First you set the minutes and then the hours.

When the set time ends, the signal sounds for 2 minutes. The display shows flashing →| and the time setting . The oven turns off automatically.

4. Press a sensor field to stop the signal.
5. Turn off the oven.

7.5 Setting the TIME DELAY function

1. Set a heating function and temperature.
2. Press ◴ again and again until |→| starts to flash.
3. Press ∧ or ∨ to set the minutes for DURATION.
4. Press OK.
5. Press ∧ or ∨ to set the hours for DURATION.
6. Press OK.

The display shows flashing →|.

7. Press ∧ or ∨ to set the END time and press OK. First you set the minutes and then the hours.

The oven turns on automatically later on, works for the set DURATION time and stops at the set END time. When the set time ends, the signal sounds for 2 minutes. The display shows flashing →| and the time setting . The oven turns off automatically.

8. Press a sensor field to stop the signal.
9. Turn off the oven.

ⓘ When the Time delay function is turned on, the display shows a symbol of the heating function, |→| with a dot and →|. The dot shows which clock function is on in the Clock / residual heat display.

7.6 Setting: Minute Minder

1. Press 🔔.

The display shows flashing 🔔 and "00".

2. Press 🔔 to switch between options. First you set the seconds, then the minutes and the hours.
3. Press ∧ or ∨ to set the MINUTE MINDER and 🔔 to confirm.

4. Press OK or the MINUTE MINDER starts automatically after 5 seconds.

When the set time ends, the signal sounds for 2 minutes and the display shows flashing 00:00 and 🔔.

5. Press a sensor field to stop the signal.

7.7 COUNT UP TIMER

1. To reset the Count Up Timer press: ∨ and ∧ at the same time .
2. When the display shows "00:00" the Count Up Timer starts to count up again.

8. AUTOMATIC PROGRAMMES

WARNING!
Refer to Safety chapters.

There are 9 automatic programmes. Use an automatic programme or recipe when you do not have the knowledge or experience on how to prepare a dish. The display shows the default cooking times for all automatic programmes.

8.1 Automatic programmes

Programme number	Programme name
1	VEGETABLES, TRADITIONAL
2	POTATO GRATIN
3	WHITE BREAD
4	POACHED FISH (TROUT)
5	ROAST BEEF
6	CHICKEN, WHOLE
7	PIZZA
8	MUFFINS
9	QUICHE LORRAINE

8.2 Automatic programmes

1. Activate the appliance.
2. Touch □.

The display shows the number of the automatic programme (1 – 9).

3. Touch ∧ or ∨ to choose the automatic programme.
4. Touch OK or wait five seconds until the appliance automatically starts to work.
5. When the set time ends, an acoustic signal sounds for two minutes. The symbol |→| flashes.
6. Touch a sensor field to stop the acoustic signal.
7. Deactivate the appliance.

8.3 Automatic programmes with weight input

If you set the weight of the meat, the appliance calculates the roasting time.

1. Activate the appliance.
2. Touch □.
3. Touch ∧ or ∨ to set the weight programme.

The display shows: the cooking time, the duration symbol |→|, a default weight, a unit of measurement (kg, g).

4. Touch OK or the settings save automatically after five seconds.

The appliance activates.

5. You can change the default weight value with ∧ or ∨. Touch OK.
6. When the set time ends, an acoustic signal sounds for two minutes. |→| flashes.
7. Touch a sensor field to stop the acoustic signal.
8. Deactivate the appliance.

8.4 Automatic programmes with the core temperature sensor (selected models)

The core temperature of the food is default and fixed in programmes with the core temperature sensor. The programme ends when the appliance is at the set core temperature.

1. Activate the appliance.
2. Touch □.
3. Install the core temperature sensor. Refer to "Core temperature sensor".
4. Touch ∧ or ∨ to set the programme for the core temperature sensor.

The display shows the cooking time, |→| and 🌡.

5. Touch OK or the settings save automatically after five seconds.

When the set time ends, an acoustic signal sounds for two minutes. |→| flashes.

6. Touch a sensor field or open the door to stop the acoustic signal.
7. Deactivate the appliance.

9. USING THE ACCESSORIES

WARNING!
Refer to Safety chapters.

9.1 Core temperature sensor

The core temperature sensor measures temperature inside the food. When the food is at the set temperature, the oven turns off.

There are two temperatures to be set:

- the oven temperature (minimum 120 °C),
- the food core temperature.

CAUTION!
Use only the core temperature sensor supplied and the original replacement parts.

Directions for the best results:

- Ingredients should be at room temperature.
- Core temperature sensor cannot be used for liquid dishes.
- During cooking the core temperature sensor must remain in the dish and the plug in the socket.
- Use recommended food core temperature settings. Refer to "Hints and tips" chapter.

The aoven calculates the approximate cooking time, it may change.

When you put the core temperature sensor into the socket, you cancel the settings for the clock functions.

Food categories: meat, poultry and fish

1. Activate the appliance.
2. Insert the tip of the core temperature sensor (with 🌡 on the handle) into the centre of the meat or fish, in the thickest part as possible. Make sure that at least 3/4 of the core temperature sensor is inside of the dish.
3. Put the plug of the core temperature sensor into the socket located in the front frame of the appliance.

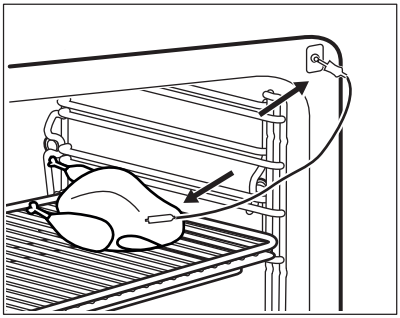

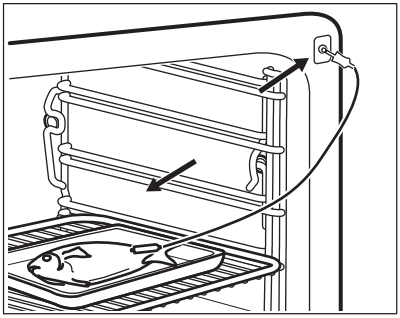

The display shows flashing and the default set core temperature. The temperature is 60 °C for the first operation, and the last set value for each subsequent operation.

4. Touch ∧ or ∨ to set the core temperature.
5. Touch OK or the settings save automatically after 5 seconds.

You can set the core temperature only when flashes. If is in the display but does not flash before you set the core temperature, touch and ∧ or ∨ to set a new value.

6. Set the oven function and the oven temperature.

The display shows the current core temperature and the heat up symbol

– – –.

When you cook with the core temperature sensor, you can change the temperature shown in the display. After you put the core temperature sensor in the socket and set an oven function and temperature, the display shows the current core temperature.

Touch again and again to see three other temperatures:

- the set core temperature
- the current oven temperature
- the current core temperature.

When the dish is at the set core temperature, an acoustic signal sounds for 2 minutes and the value of the core temperature and flash. The appliance deactivates.

7. Touch a sensor field to deactivate the acoustic signal.
8. Remove the core temperature sensor from the socket and remove the dish from the appliance.

WARNING!
There is a risk of burns as the core temperature sensor becomes hot. Be careful when you unplug it and remove it from the dish.

Food category: casserole

1. Activate the appliance.
2. Place half of the ingredients in a baking dish.
3. Insert the tip of the core temperature sensor exactly in the centre of the casserole. The core temperature sensor should be stabilized in one place during baking. Use a solid ingredient to achieve that. Use the rim of the baking dish to support the silicone handle of the core temperature sensor. The tip of the core temperature sensor should not touch the bottom of a baking dish.

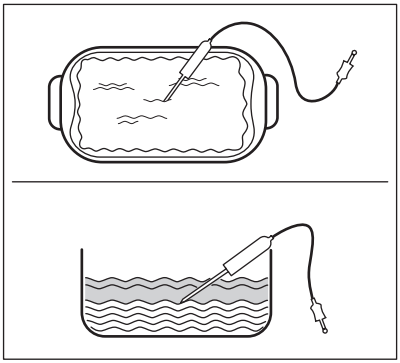

4. Cover the core temperature sensor with the remaining ingredients.
5. Put the plug of the core temperature sensor into the socket located in the front frame of the appliance.

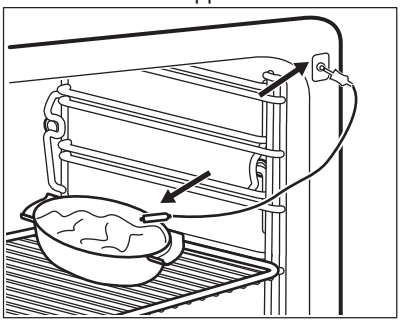

The display shows flashing and the default set core temperature. The temperature is 60 °C for the first operation, and the last set value for each subsequent operation.

6. Touch ∧ or ∨ to set the core temperature.
7. Touch OK or the settings save automatically after 5 seconds.

You can set the core temperature only when flashes. If is in the display but does not flash before you set the core temperature, touch »3s and ∧ or ∨ to set a new value.

8. Set the oven function and the oven temperature.

The display shows the current core temperature and the heat up symbol ---.

When the dish is at the set core temperature, an acoustic signal sounds for 2 minutes and the value of the core temperature and flash. The appliance deactivates.

9. Touch a sensor field to deactivate the acoustic signal.
10. Remove the core temperature sensor from the socket and remove the dish from the appliance.

WARNING!
There is a risk of burns as the core temperature sensor becomes hot. Be careful when you unplug it and remove it from the dish.

9.2 Inserting the accessories

Wire shelf:

Push the shelf between the guide bars of the shelf support .

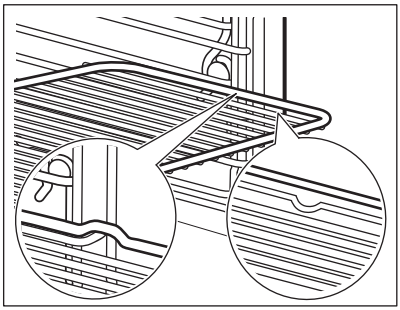

Baking tray/ Deep pan:

Push the baking tray / deep pan between the guide bars of the shelf support.

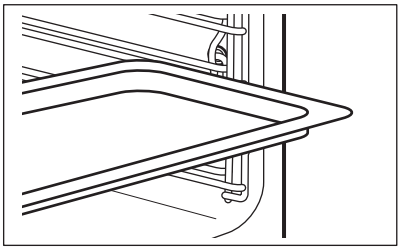

Wire shelf and baking tray / deep pan together:

Push the baking tray / deep pan between the guide bars of the shelf support and the wire shelf on the guide bars above.

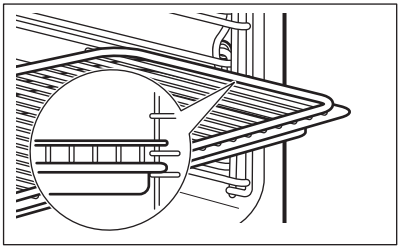

Small indentation at the top increase safety. The indentations are also anti-tip devices. The high rim around the shelf prevents cookware from slipping of the shelf.

10. ADDITIONAL FUNCTIONS

10.1 Using My Favourite Programme function

Use this function to save your favourite temperature and time settings for an oven function or programme.

1. Set the temperature and time for an oven function or programme.
2. Touch and hold ☆ for more than three seconds. An acoustic signal sounds.
3. Deactivate the appliance.

- **To activate the function** touch ☆. The appliance activates your favourite programme.

When the function operates, you can change the time and temperature.

- **To deactivate the function** touch ⏻. The appliance deactivates your favourite programme.

10.2 Using the Child Lock

The Child Lock prevents an accidental operation of the oven.

1. You can turn on this function when the oven is off. Do not set a heating function.
2. Press and hold ⏻ for 3 seconds.
3. Press and hold 🕘 and ∨ at the same time for 2 seconds.

An acoustic signal sounds.
The display shows SAFE.
To turn off the Child Lock function repeat step 3.

10.3 Using the Function Lock

You can turn on the function only when the oven works.

The Function Lock prevents an accidental change of the oven function.

1. To turn on the function turn on the oven.
2. Turn on an oven function or setting.
3. Touch and hold 🕘 and ∨ at the same time for 2 seconds.

A signal sounds.
Lock comes on in the display.
To turn off the Function Lock repeat step 3.

You can turn off the oven when the Function Lock is on. When you turn off the oven, the Function Lock turns off.

10.4 Using the settings menu

The settings menu lets you turn on or turn off functions in the main menu. The display shows SET and the number of the setting.

	Description	Value to set
1	RESIDUAL HEAT INDICATOR	ON / OFF
2	CLEANING REMINDER	ON / OFF
3	KEY TONE[1)]	CLICK / BEEP / OFF
4	FAULTY TONE	ON / OFF
5	DEMO MODE	Activation code: 2468
6	BRIGHTNESS	LOW / MEDIUM / HIGH
7	WATER HARDNESS	1 - 4
8	SERVICE MENU	-
9	RESTORE SETTINGS	YES / NO

1) It is not possible to deactivate the tone of the ON / OFF sensor field.

1. Press and hold ☐ for 3 seconds.
The display shows SET1 and "1" flashes.
2. Press ∧ or ∨ to set the setting.
3. Press OK.
4. Press ∧ or ∨ to change the value of the setting.
5. Press OK.

To exit the Settings menu, press ⏻ or press and hold ☐.

10.5 Automatic Switch-off

For safety reasons the appliance deactivates automatically after some time if an oven function operates and you do not change any settings.

Temperature (°C)	Switch-off time (h)
30 - 115	12.5
120 - 195	8.5
200 - 230	5.5

After the Automatic switch-off, touch a sensor field to operate the appliance again.

The Automatic switch-off does not work with the functions: core temperature sensor, Light, Duration, End, Time delay.

10.6 Brightness of the display

There are two modes of display brightness:

- Night brightness - when the appliance is deactivated, the brightness of the display is lower between 10 PM and 6 AM.
- Day brightness:
  - when the appliance is activated.
  - if you touch a sensor field during the night brightness (apart from ON / OFF), the display goes back to the day brightness mode for the next 10 seconds.
  - if the appliance is deactivated and you set the Minute Minder. When the Minute Minder function ends, the display goes back to the night brightness.

10.7 Cooling fan

When the oven operates, the cooling fan turns on automatically to keep the surfaces of the oven cool. If you turn off the oven, the cooling fan can continue to operate until the oven cools down.

11. HINTS AND TIPS

WARNING!
Refer to Safety chapters.

The temperature and baking times in the tables are guidelines only. They depend on the recipes and the quality and quantity of the ingredients used.

11.1 Cooking recommendations

Your oven may bake or roast differently to the oven you had before. The below tables provide you with the standard settings for temperature, cooking time and shelf position.

If you cannot find the settings for a special recipe, look for the similar one.

11.2 Full Steam

Be careful when you open the oven door when the function is on. Steam can release.

Sterilisation

This function allows you to sterilise containers (e.g. baby bottles).

Put the clean containers up side down in the centre of the shelf on the first shelf position.

Fill the drawer with the maximum quantity of water and set the time to 40 minutes.

Cooking

This function allows you to prepare all types of food, fresh or frozen. You can use it to cook, warm, defrost, poach or blanch vegetables, meat, fish, pasta, rice, semolina and eggs.

You can prepare a full meal at one time. Cook together dishes with similar cooking times. Use the largest quantity of water required when you cook dishes at one time.

Use the second shelf position.

Set the temperature to 99 °C unless the below table recommends different setting.

Vegetables

Food	Time (min)
Peeled tomatoes	10
Broccoli, florets, preheat the empty oven	8 - 10
Spinach, fresh	10 - 15
Courgette, slices	10 - 15
Vegetables, blanched	15
Mushroom, slices	15 - 20
Pepper, strips	15 - 20
Broccoli, whole	15 - 25
Asparagus, green	15 - 25
Aubergines	15 - 25
Pumpkin, cubes	15 - 25
Tomatoes	15 - 25
Beans, blanched	20 - 25
Lamb's lettuce, florets	20 - 25
Savoy cabbage	20 - 25
Celery, cubed	20 - 30
Leek, rings	20 - 30
Peas	20 - 30
Snow peas / Kaiser peppers	20 - 30
Sweet potatoes	20 - 30
Fennel	20 - 30
Carrots	20 - 30
Asparagus, white	25 - 35
Brussels sprouts	25 - 35
Cauliflower, florets	25 - 35
Kohlrabi, strips	25 - 35

Food	Time (min)
White haricot beans	25 - 35
Sweet corn on the cob	30 - 40
Black salsify	35 - 45
Cauliflower, whole	35 - 45
Green beans	35 - 45
Cabbage white or red, stripes	40 - 45
Artichokes	50 - 60
Dried beans, soaked, water / beans ratio 2:1	55 - 65
Sauerkraut	60 - 90
Beetroot	70 - 90

Side dishes, accompaniments

Food	Time (min)
Couscous, water / couscous ratio 1:1	15 - 20
Tagliatelle, fresh	15 - 25
Semolina pudding, milk / semolina ratio 3.5:1	20 - 25
Lentils, red, water / lentils ratio 1:1	20 - 30
Spaetzle	25 - 30
Bulgur, water / bulgur ratio 1:1	25 - 35
Yeast dumplings	25 - 35
Fragrant rice, water / rice ratio 1:1	30 - 35
Boiled potatoes, quartered	30 - 40
Bread dumpling	35 - 45
Potato dumplings	35 - 45
Rice, water / rice ratio 1:1, the ratio of water to rice can change according to the type of rice.	35 - 45
Polenta, liquid ratio 3:1	40 - 50
Rice pudding, milk / rice ratio 2.5:1	40 - 55
Unpeeled potatoes, medium	45 - 55
Lentils, brown and green, water / lentils ratio 2:1	55 - 60

Fruits

Food	Time (min)
Apple slices	10 - 15
Hot berries	10 - 15
Chocolate melting	10 - 20
Fruit compote	20 - 25

Fish

Food	Temperature (°C)	Time (min)
Thin fish fillet	75 - 80	15 - 20
Prawns, fresh	75 - 85	20 - 25
Mussels	100	20 - 30
Thick fish fillet	75 - 85	20 - 30
Trout, 0.25 kg	75 - 85	20 - 30
Prawns, frozen	75 - 85	30 - 40

Meat

Food	Temperature (°C)	Time (min)
Chipolatas	80	15 - 20
Bavarian veal sausage / White sausage	80	20 - 30
Vienna sausage	80	20 - 30

Food	Temperature (°C)	Time (min)
Chicken breast, poached	90	25 - 35
Cooked ham, 1 kg	99	55 - 65
Chicken, poached, 1 - 1.2 kg	99	60 - 70
Kasseler, poached	90	70 - 90
Veal / Pork loin, 0.8 - 1 kg	90	80 - 90
Tafelspitz	99	110 - 120

Eggs

Food	Time (min)
Eggs, soft-boiled	10 - 11
Eggs, medium-boiled	12 - 13
Eggs, hard-boiled	18 - 21

11.3 Combining function: Turbo Grilling + Full Steam

You can combine these functions to cook meat, vegetables and side dishes at one time.

1. Set the function: Turbo Grilling to roast meet.
2. Add the prepared vegetables and side dishes.
3. Decrease oven temperature to around 90 °C. You can open the oven door to the first position for approximately 15 minutes.
4. Set the function: Full Steam. Cook all dishes together until they are ready.

Food	Turbo Grilling (first step: cook meat)			Full Steam (second step: add vegetables)		
	Temperature (°C)	Time (min)	Shelf position	Temperature (°C)	Time (min)	Shelf position
Roast Beef, 1 kg / Brussels sprouts, polenta	180	60 - 70	meat: 1	99	40 - 50	meat: 1 vegetables: 3
Roast pork, 1 kg / Potatoes / Vegetables, gravy	180	60 - 70	meat: 1	99	30 - 40	meat: 1 vegetables: 3
Roast veal, 1 kg / Rice / Vegetables	180	50 - 60	meat: 1	99	30 - 40	meat: 1 vegetables: 3

11.4 Humidity High

Use the second shelf position.

Food	Temperature (°C)	Time (min)
Thin fish fillet	85	15 - 25
Baked eggs	90 - 110	15 - 30
Small fish, up to 0.35 kg	90	20 - 30
Thick fish fillet	90	25 - 35
Whole fish, up to 1 kg	90	30 - 40
Custard / Flan, in small dishes	90	35 - 45
Oven dumplings	120 - 130	40 - 50
Terrine	90	40 - 50

11.5 Humidity Low

Use the second shelf position unless the below table recommends different setting.

Food	Temperature (°C)	Time (min)
Ready-to-bake baguettes, 40 - 50 g	200	20 - 30
Ready-to-bake rolls	200	20 - 30
Ready-to-bake baguettes, frozen, 40 - 50 g	200	25 - 35
Meatloaf, raw, 0.5 kg	180	30 - 40
Rolls, 40 - 60 g	180 - 210	30 - 40
Pasta bake	190	40 - 50
Bread, 0.5 - 1 kg	180 - 190	45 - 50
Lasagne	180	45 - 55
Chicken, 1 kg	180 - 200	50 - 60
Potato gratin	160 - 170	50 - 60
Pork loin, smoked, 0.6 - 1 kg	160 - 180	60 - 70
Roast Beef, 1 kg	180 - 200	60 - 90
Duck, 1.5 - 2 kg	180	70 - 90
Roast veal, 1 kg	180	80 - 90
Roast pork, 1 kg	160 - 180	90 - 100

Food	Temperature (°C)	Time (min)	Shelf position
Goose, 3 kg	170	130 - 170	1

11.6 Steam Regenerating

Use the second shelf position.

Set the temperature to 110 °C.

Food	Time (min)
One-plate dishes	10 - 15
Pasta	10 - 15
Rice	10 - 15
Dumplings	15 - 25

11.7 Baking

Use the lower temperature the first time.

You can extend baking times by 10 – 15 minutes if you bake cakes on more than one shelf position.

Cakes and pastries at different heights do not always brown equally. There is no need to change the temperature setting if an unequal browning occurs. The differences equalize during baking.

Trays in the oven can twist during baking. When the trays become cold again, the distortions disappear.

11.8 Tips on baking

Baking results	Possible cause	Remedy
The bottom of the cake is not baked sufficiently.	The shelf position is incorrect.	Put the cake on a lower shelf.
The cake sinks and becomes soggy or streaky.	The oven temperature is too high.	Next time set slightly lower oven temperature.
	The baking time is too short.	Next time set a longer baking time and lower oven temperature.
The cake is too dry.	The oven temperature is too low.	Next time set higher oven temperature.
	The baking time is too long.	Next time set shorter baking time.
The cake bakes unevenly.	The oven temperature is too high and the baking time is too short.	Set lower oven temperature and longer baking time.
	The cake batter is not evenly distributed.	Next time spread the cake batter evenly on the baking tray.
The cake is not ready in the baking time specified in a recipe.	The oven temperature is too low.	Next time set a slightly higher oven temperature.

11.9 Baking on one shelf level

Baking in tins

Use the function: True Fan Cooking.

Food	Temperature (°C)	Time (min)	Shelf position
Flan base - short pastry, preheat the empty oven	170 - 180	10 - 25	2
Flan base - sponge mixture	150 - 170	20 - 25	2
Ring cake / Brioche	150 - 160	50 - 70	1
Madeira cake / Fruit cakes	140 - 160	70 - 90	1

Baking in tins

Use the first shelf position.

Use the function: Conventional Cooking / Top / Bottom Heat.

Food	Temperature (°C)	Time (min)
Cheesecake	170 - 190	60 - 90
Cake with crumble topping	150 - 160	20 - 40
Fruit flans (made of yeast dough / sponge mixture), use the deep pan	150	35 - 55
Fruit flans made of short pastry	160 - 170	40 - 80

Cakes, pastries, breads

Use the third shelf position.

Use the function: True Fan Cooking.

Use the baking tray.

Cakes, pastries, breads

Preheat the empty oven.

Use the function: Conventional Cooking / Top / Bottom Heat.

Use the baking tray.

Food	Temperature (°C)	Time (min)	Shelf position
Swiss roll	180 - 200	10 - 20	3
Rye bread: 1. Start with: 2. Continue with:	1. 230 2. 160 - 180	1. 20 2. 30 - 60	1
Buttered almond cake / Sugar cakes	190 - 210	20 - 30	3
Cream puffs / Eclairs	190 - 210	20 - 35	3
Plaited bread / Bread crown	170 - 190	30 - 40	3
Fruit flans (made of yeast dough / sponge mixture), use the deep pan	170	35 - 55	3
Yeast cakes with delicate toppings (e.g. quark, cream, custard)	160 - 180	40 - 80	3
Christmas stollen	160 - 180	50 - 70	2

Biscuits

Use the third shelf position.

Use the function: True Fan Cooking.

Food	Temperature (°C)	Time (min)
Short pastry biscuits	150 - 160	10 - 20
Rolls, preheat the empty oven	160	10 - 25
Biscuits made of sponge mixture	150 - 160	15 - 20
Puff pastries, preheat the empty oven	170 - 180	20 - 30
Biscuits made of yeast dough	150 - 160	20 - 40
Macaroons	100 - 120	30 - 50
Pastries made with egg white / Meringues	80 - 100	120 - 150

Biscuits

Preheat the empty oven.

Use the third shelf position.

Use the function: Conventional Cooking / Top / Bottom Heat.

Food	Temperature (°C)	Time (min)
Rolls	190 - 210	10 - 25

11.10 Bakes and gratins

Use the first shelf position.

Food	Function	Temperature (°C)	Time (min)
Baguettes topped with melted cheese	True Fan Cooking	160 - 170	15 - 30
Vegetables au gratin, preheat the empty oven	Turbo Grilling	160 - 170	15 - 30
Lasagne	Conventional Cooking / Top / Bottom Heat	180 - 200	25 - 40
Fish bakes	Conventional Cooking / Top / Bottom Heat	180 - 200	30 - 60
Stuffed vegetables	True Fan Cooking	160 - 170	30 - 60
Sweet bakes	Conventional Cooking / Top / Bottom Heat	180 - 200	40 - 60
Pasta bake	Conventional Cooking / Top / Bottom Heat	180 - 200	45 - 60

11.11 Moist Fan Baking

For the best results follow suggestions listed in the table below.

Use the third shelf position.

	(°C)	(min)
Pasta gratin	200 - 220	45 - 55
Potato gratin	180 - 200	70 - 85
Moussaka	170 - 190	70 - 95
Lasagne	180 - 200	75 - 90
Cannelloni	180 - 200	70 - 85
Bread pudding	190 - 200	55 - 70
Rice pudding	170 - 190	45 - 60
Apple cake, made of sponge mixture (round cake tin)	160 - 170	70 - 80
White bread	190 - 200	55 - 70

11.12 Multilevel Baking

Use the baking trays.

Use the function: True Fan Cooking.

Cakes, pastries

Food	Temperature (°C)	Time (min)	Shelf position	
			2 positions	3 positions
Cream puffs / Eclairs	160 - 180 , preheat the empty oven	25 - 45	1 / 4	-
Dry streusel cake	150 - 160	30 - 45	1 / 4	-

Biscuits, small cakes, pastries, rolls

Food	Temperature (°C)	Time (min)	Shelf position	
			2 positions	3 positions
Rolls	180	20 - 30	1 / 4	-
Short pastry biscuits	150 - 160	20 - 40	1 / 4	1 / 3 / 5
Biscuits made of sponge mixture	160 - 170	25 - 40	1 / 4	-

Food	Temperature (°C)	Time (min)	Shelf position	
			2 positions	3 positions
Puff pastries	170 - 180 , preheat the empty oven	30 - 50	1 / 4	-
Biscuits made of yeast dough	160 - 170	30 - 60	1 / 4	-
Macaroons	100 - 120	40 - 80	1 / 4	-
Biscuits made of egg white / Meringues	80 - 100	130 - 170	1 / 4	-

11.13 Slow Cooking

Use this function to prepare lean, tender pieces of meat and fish with core temperatures no more than 65 °C. This function is not applicable to such recipes as pot roast or fatty roast pork. You can use the core temperature sensor to guarantee that the meat has the correct core temperature (see the table for the core temperature sensor).

In the first 10 minutes you can set an oven temperature between 80 °C and 150 °C. The default is 90 °C. After the temperature is set, the oven continues to cook at 80 °C. Do not use this function for poultry.

Always cook without a lid when you use this function.

1. Sear the meat in a pan on the hob on a very high setting for 1 - 2 minutes on each side.
2. Put the meat together with the hot roasting pan into the oven on the wire shelf.
3. Put the core temperature sensor into the meat.
4. Select the function Slow Cooking and set the correct end core temperature.

Food	Quantity	Temperature (°C)	Time (min)	Shelf position
Roast beef	1000 - 1500 g	120	120 - 150	1
Fillet of beef	1000 - 1500 g	120	90 - 150	3
Roast veal	1000 - 1500 g	120	120 - 150	1
Steaks	200 - 300 g	120	20 - 40	3

11.14 Crispy baking with: Pizza Setting

Use the first shelf position.

Food	Tempera-ture (°C)	Time (min)
Tarts	180 - 200	40 - 55

Food	Temperature (°C)	Time (min)
Spinach flan	160 - 180	45 - 60
Quiche lorraine / Swiss flan	170 - 190	45 - 55
Apple pie, covered	150 - 170	50 - 60
Vegetable pie	160 - 180	50 - 60

Preheat the empty oven before cooking.

Use the second shelf position.

Food	Temperature (°C)	Time (min)
Pizza, thin crust, use the deep pan	210 - 230	15 - 25
Pizza, thick crust	180 - 200	20 - 30
Unleavened bread	210 - 230	10 - 20
Puff pastry flan	160 - 180	45 - 55
Flammkuchen	210 - 230	15 - 25
Pierogi	180 - 200	15 - 25

11.15 Roasting

Use heat-resistant ovenware.

Roast lean meat covered.

Roast large meat joints directly in the tray or on the wire shelf placed above the tray.

Put some water in the tray to prevent dripping fat from burning.

Turn the roast after 1/2 - 2/3 of the cooking time.

Roast meat and fish in large pieces (1 kg or more).

Baste meat joints with their own juice several times during roasting.

11.16 Roasting tables

Use the first shelf position.

Beef

Food	Quantity	Function	Temperature (°C)	Time (min)
Pot roast	1 - 1.5 kg	Conventional Cooking / Top / Bottom Heat	230	120 - 150
Roast beef or fillet, rare, preheat the empty oven	per cm of thickness	Turbo Grilling	190 - 200	5 - 6
Roast beef or fillet, medium, preheat the empty oven	per cm of thickness	Turbo Grilling	180 - 190	6 - 8
Roast beef or fillet, well done, preheat the empty oven	per cm of thickness	Turbo Grilling	170 - 180	8 - 10

Pork
Use the function: Turbo Grilling.

Food	Quantity (kg)	Temperature (°C)	Time (min)
Shoulder / Neck /Ham joint	1 - 1.5	160 - 180	90 - 120
Chops / Spare rib	1 - 1.5	170 - 180	60 - 90
Meatloaf	0.75 - 1	160 - 170	50 - 60
Pork knuckle, pre-cooked	0.75 - 1	150 - 170	90 - 120

Veal
Use the function: Turbo Grilling.

Food	Quantity (kg)	Temperature (°C)	Time (min)
Roast veal	1	160 - 180	90 - 120
Veal knuckle	1.5 - 2	160 - 180	120 - 150

Lamb
Use the function: Turbo Grilling.

Food	Quantity (kg)	Temperature (°C)	Time (min)
Lamb leg / Roast lamb	1 - 1.5	150 - 170	100 - 120
Lamb saddle	1 - 1.5	160 - 180	40 - 60

Game
Use the function: Conventional Cooking / Top / Bottom Heat.

Food	Quantity (kg)	Temperature (°C)	Time (min)
Saddle / Hare leg, preheat the empty oven	up to 1	230	30 - 40
Venison saddle	1.5 - 2	210 - 220	35 - 40
Venison haunch	1.5 - 2	180 - 200	60 - 90

Poultry
Use the function: Turbo Grilling.

Food	Quantity (kg)	Temperature (°C)	Time (min)
Poultry, portions	0.2 - 0.25 each	200 - 220	30 - 50
Chicken, half	0.4 - 0.5 each	190 - 210	35 - 50
Chicken, poulard	1 - 1.5	190 - 210	50 - 70
Duck	1.5 - 2	180 - 200	80 - 100
Goose	3.5 - 5	160 - 180	120 - 180

Food	Quantity (kg)	Temperature (°C)	Time (min)
Turkey	2.5 - 3.5	160 - 180	120 - 150
Turkey	4 - 6	140 - 160	150 - 240

Fish
Use the function: Conventional Cooking / Top / Bottom Heat.

Food	Quantity (kg)	Temperature (°C)	Time (min)
Whole fish	1 - 1.5	210 - 220	40 - 60

11.17 Grilling

Preheat the empty oven before cooking.

Grill only thin pieces of meat or fish.

Place a pan on the first shelf position to collect fat.

Grilling

Food	Temperature (°C)	Time (min)		Shelf position
		1st side	2nd side	
Roast Beef	210 - 230	30 - 40	30 - 40	2
Beef fillet	230	20 - 30	20 - 30	3
Pork loin	210 - 230	30 - 40	30 - 40	2
Veal loin	210 - 230	30 - 40	30 - 40	2
Lamb saddle	210 - 230	25 - 35	20 - 25	3
Whole fish, 0.5 kg - 1 kg	210 - 230	15 - 30	15 - 30	3 / 4

Fast Grilling
Always grill with the maximum temperature setting.

Use the fourth shelf position, unless specified otherwise.

Food	Time (min)	
	1st side	2nd side
Burgers	8 - 10	6 - 8
Pork fillet	10 - 12	6 - 10

Food	Time (min)	
	1st side	2nd side
Sausages	10 - 12	6 - 8
Steaks	7 - 10	6 - 8
Toast, use the fifth shelf position	1 - 3	1 - 3
Toast with topping	6 - 8	-

11.18 Frozen Foods

Food	Temperature (°C)	Time (min)	Shelf position
Pizza, frozen	200 - 220	15 - 25	2
Pizza American, frozen	190 - 210	20 - 25	2
Pizza, chilled	210 - 230	13 - 25	2
Pizza Snacks, frozen	180 - 200	15 - 30	2
French Fries, thin	200 - 220	20 - 30	3
French Fries, thick	200 - 220	25 - 35	3
Wedges / Croquettes	220 - 230	20 - 35	3
Hash Browns	210 - 230	20 - 30	3
Lasagne / Cannelloni, fresh	170 - 190	35 - 45	2
Lasagne / Cannelloni, frozen	160 - 180	40 - 60	2
Oven baked cheese	170 - 190	20 - 30	3
Chicken wings	190 - 210	20 - 30	2

11.19 Preserving - Bottom Heat

- Use only preserve jars of the same dimensions available on the market.
- Do not use jars with twist-off and bayonet type lids or metal tins.
- Use the first shelf from the bottom for this function.
- Put no more than six one-litre preserve jars on the baking tray.
- Fill the jars equally and close with a clamp.
- The jars cannot touch each other.
- Put approximately 1/2 litre of water into the baking tray to give sufficient moisture in the oven.
- When the liquid in the jars starts to simmer (after approximately 35 - 60 minutes with one-litre jars), stop the oven or decrease the temperature to 100 °C (see the table).

Soft fruit

Food	Temperature (°C)	Cooking time until simmering (min)	Continue to cook at 100 °C (min)
Strawberries / Blueberries / Raspberries / Ripe gooseberries	160 - 170	35 - 45	-

Stone fruit

Food	Temperature (°C)	Cooking time until simmering (min)	Continue to cook at 100 °C (min)
Pears / Quinces / Plums	160 - 170	35 - 45	10 - 15

Vegetables

Food	Temperature (°C)	Cooking time until simmering (min)	Continue to cook at 100 °C (min)
Carrots[1)]	160 - 170	50 - 60	5 - 10
Cucumbers	160 - 170	50 - 60	-
Mixed pickles	160 - 170	50 - 60	5 - 10
Kohlrabi / Peas / Asparagus	160 - 170	50 - 60	15 - 20

1) Leave standing in the oven after it is deactivated.

11.20 Drying - True Fan Cooking

Cover trays with grease proof paper or baking parchment.

For a better result, stop the oven halfway through the drying time, open the door and let it cool down for one night to complete the drying.

For one tray use the third shelf position.

For 2 trays use the first and fourth shelf position.

VEGETABLES		
	(°C)	(h)
Beans	60 - 70	6 - 8
Peppers	60 - 70	5 - 6
Vegetables for soup	60 - 70	5 - 6
Mushrooms	50 - 60	6 - 8
Herbs	40 - 50	2 - 3

FRUIT	
Set the temperature to 60 - 70 °C.	
	(h)
Plums	8 - 10
Apricots	8 - 10
Apple slices	6 - 8
Pears	6 - 9

11.21 Bread Baking

Preheating is not recommended.

Use the second shelf position.

Food	Tempera-ture (°C)	Time (min)
White bread	170 - 190	40 - 60
Baguette	200 - 220	35 - 45
Brioche	180 - 200	40 - 60

Food	Temperature (°C)	Time (min)
Ciabatta	200 - 220	35 - 45
Rye bread	170 - 190	50 - 70
Wholemeal bread	170 - 190	50 - 70

Food	Temperature (°C)	Time (min)
Whole grain bread	170 - 190	40 - 60
Bread rolls	190 - 210	20 - 35

11.22 Food Sensor

Beef	Food core temperature (°C)		
	Rare	Medium	Well done
Roast Beef	45	60	70
Sirloin	45	60	70

Beef	Food core temperature (°C)		
	Less	Medium	More
Meatloaf	80	83	86

Pork	Food core temperature (°C)		
	Less	Medium	More
Ham / Roast	80	84	88
Saddle chop / Pork loin, smoked / Pork loin, poached	75	78	82

Veal	Food core temperature (°C)		
	Less	Medium	More
Roast veal	75	80	85
Veal knuckle	85	88	90

Mutton / lamb	Food core temperature (°C)		
	Less	Medium	More
Mutton leg	80	85	88
Mutton saddle	75	80	85
Roast lamb / Lamb leg	65	70	75

Game	Food core temperature (°C)		
	Less	Medium	More
Hare saddle / Venison saddle	65	70	75
Hare leg / Hare, whole / Venison leg	70	75	80

Poultry	Food core temperature (°C)		
	Less	Medium	More
Chicken	80	83	86
Duck, whole / half / Turkey, whole / breast	75	80	85
Duck, breast	60	65	70

Fish (salmon, trout, zander)	Food core temperature (°C)		
	Less	Medium	More
Fish, whole / large / steamed / Fish, whole / large / roasted	60	64	68

Casseroles - Precooked vegetables	Food core temperature (°C)		
	Less	Medium	More
Zucchini Casserole / Broccoli Casserole / Fennel Casserole	85	88	91

Casseroles - Savoury	Food core temperature (°C)		
	Less	Medium	More
Cannelloni / Lasagne / Pasta bake	85	88	91

Casseroles - Sweet	Food core temperature (°C)		
	Less	Medium	More
White bread casserole with / without fruits / Rice porridge casserole with / without fruits / Sweet noodle casserole	80	85	90

11.23 Information for test institutes

Tests according to: EN 60350, IEC 60350.

BAKING ON ONE LEVEL. Baking in tins

		(°C)	(min)	
Fatless sponge cake	True Fan Cooking	140 - 150	35 - 50	2
Fatless sponge cake	Conventional Cooking / Top / Bottom Heat	160	35 - 50	2
Apple pie, 2 tins Ø20 cm	True Fan Cooking	160	60 - 90	2
Apple pie, 2 tins Ø20 cm	Conventional Cooking / Top / Bottom Heat	180	70 - 90	1

BAKING ON ONE LEVEL. Biscuits

Use the third shelf position.

		(°C)	(min)
Short bread / Pastry stripes	True Fan Cooking	140	25 - 40
Short bread / Pastry stripes, preheat the empty oven	Conventional Cooking / Top / Bottom Heat	160	20 - 30
Small cakes, 20 per tray, preheat the empty oven	True Fan Cooking	150	20 - 35
Small cakes, 20 per tray, preheat the empty oven	Conventional Cooking / Top / Bottom Heat	170	20 - 30

MULTILEVEL BAKING. Biscuits

		(°C)	(min)		
				2 positions	3 positions
Short bread / Pastry stripes	True Fan Cooking	140	25 - 45	1 / 4	1 / 3 / 5
Small cakes, 20 per tray, preheat the empty oven	True Fan Cooking	150	23 - 40	1 / 4	-

GRILL

Preheat the empty oven for 5 minutes.

Grill with the maximum temperature setting.

		(min)	
Toast	Grilling	1 - 3	5
Beef Steak, turn halfway through	Grilling	24 - 30	4



FAST GRILLING



Preheat the empty oven for 3 minutes.



Grill with the maximum temperature setting.



Use the fourth shelf position.





(min)

	1st side	2nd side
Burgers	8 - 10	6 - 8
Toast	1 - 3	1 - 3

11.24 Information for test institutes

Tests according to IEC 60350-1.

Tests for the function: Full Steam.

Use the first shelf position.

Use the baking tray.

Food	Container (Gastronorm)	Quantity (kg)	Shelf position	Temperature (°C)	Time (min)
Broccoli, preheat the empty oven	1 x 1/2 perforated	0.3	3	99	13 - 15
Broccoli, preheat the empty oven	2 x 1/2 perforated	2 x 0.3	2 and 4	99	13 - 15
Broccoli, preheat the empty oven	1 x 1/2 perforated	max.	3	99	15 - 18
Peas, frozen	2 x 1/2 perforated	2 x 1.3	2 and 4	99	Until the temperature in the coldest spot reaches 85 °C.

12. CARE AND CLEANING

WARNING!
Refer to Safety chapters.

12.1 Notes on cleaning

 **Cleaning Agents**	Clean the front of the oven with a soft cloth with warm water and a mild cleaning agent.
	To clean metal surfaces, use a dedicated cleaning agent.
	Clean stubborn stains with a special oven cleaner.
 **Everyday Use**	Clean the oven cavity after each use. Fat accumulation or other food remains may cause fire. The risk is higher for the grill pan.
	Dry the cavity with a soft cloth after each use.
 **Accessories**	Clean all accessories after each use and let them dry. Use a soft cloth with warm water and a cleaning agent. Do not clean the accessories in a dishwasher.
	Do not clean the non-stick accessories using aggressive agents, sharp-edged objects or in a dishwasher

12.2 Recommended cleaning products

Do not use abrasive sponges or aggressive detergents. It can cause damage to the enamel and the stainless steel parts.

You can buy our products at www.electrolux.com/shop and at the best retailer shops.

12.3 Removing the shelf supports

Before maintenance, make sure that the oven is cool. There is a risk of burns.

To clean the oven, remove the shelf supports.

1. Pull carefully the supports up and out of the front catch.

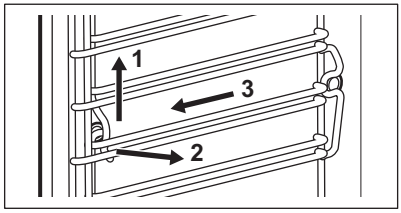

2. Pull the front end of the shelf support away from the side wall.
3. Pull the supports out of the rear catch.

Install the shelf supports in the opposite sequence.

12.4 Submenu for: Cleaning

The submenu with cleaning functions is under the sensor field ☐.

Symbol	Menu item	Description
S1	Tank Emptying	Procedure for removing the residual water from the water drawer after use of the steam functions.
S2	Steam Cleaning	Cleaning the appliance with steam.
S3	Descaling	Procedure for cleaning the steam generation circuit from residual limestone.
S4	Rinsing	Procedure for rinsing and cleaning the steam generation circuit after frequent use of the steam functions.

12.5 Activating a cleaning function

1. Activate the appliance.
2. Touch ☐ until the display showsS1. In some models you can also choose S2, S3, S4.
3. Touch ∧ or ∨ to select a cleaning function.
4. Touch OK to confirm.

12.6 Tank Emptying - S1

Remove all accessories.

The cleaning function removes the residual water from the water drawer. Use the function after the steam cooking function.

The duration of the function is around 6 minutes.

The light in this function is off.

1. Put the tray on the first shelf position.
2. Activate Tank Emptying function - S1. Refer to "Activating a cleaning function".
3. Touch OK.

Remove the baking tray after the end of the procedure.

12.7 Steam Cleaning - S2

Remove as much dirt as possible manually.

Remove the accessories and the shelf support to clean the side walls.

The steam cleaning functions support the steam cavity cleaning of the appliance.

ⓘ For a better performance you should start the cleaning function when the appliance is cool.

ⓘ The specified time is related to the duration of the function and does not include the time required for cleaning of the cavity by the user.

When the steam cleaning function is active, the lamp is off.

1. Fill the water drawer to the maximum level (around 950 ml of water) until the acoustic signal sounds or the display shows the message.
2. Activate Steam Cleaning function - S2. Refer to "Activating a cleaning function".
   The duration of the function is around 30 minutes.
   An acoustic signal sounds when the programme is completed.
3. Touch a sensor field to deactivate the signal.
4. Wipe the internal surface of the appliance with a non-abrasive surface care sponge. You can use warm water to clean the cavity.

After cleaning keep the appliance door open for approximately 1 hour. Wait until the appliance is dry. Let the appliance dry fully with the door open. To speed up the drying you can close the door and

heat up the appliance with True Fan Cooking at temperature 150°C for approximately 15 minutes. You can get maximum effects of the cleaning function if you manually clean the appliance immediately after the function ends. Repeat the procedure a second time if the level of dirt is high.

12.8 Cleaning Reminder

This function reminds you that the cleaning is necessary and that you should perform the function: S2.

You can enable / disable this function in the settings menu.

12.9 Steam generation system - Descaling - S3

When the steam generator operates, there is an accumulation and deposition of limestone inside because of calcium contents in the water. This can have a negative effect on the steam quality, on the performance of the steam generator and on the food quality. To prevent this, clean the steam generation circuit from residual stone.

Select the function from the menu: ☐.

The duration of the complete procedure is about 2 hours.

The light in this function is off.

1. Remove all accessories.
2. Make sure that the water drawer is empty. Activate Tank Emptying - S1 function if needed.
3. Put the tray on the first shelf position.
4. Put 250 ml of the descaling agent in the water drawer.
5. Fill the remaining part of the water drawer with water to the maximum level until the acoustic signal sounds or the display shows the message. The duration of the procedure is about 1 hour 40 minutes.
6. Activate Descaling function - S3. Refer to "Activating a cleaning function".
7. After the end of the first part, empty the tray and put it on the first shelf position again.
8. Activate the Rinsing function. Refer to "Steam generation system - Rinsing - S4".

Remove the tray after the end of the procedure.

If the function Descaling is not performed in the correct way, the display will show a message to repeat it.

If the appliance is humid and wet, wipe it out with a dry cloth. Let the appliance dry fully with the door open.

12.10 Descaling reminder

There are two descaling reminders which remind you to perform the function: Descaling. These reminders activate each time you switch off the appliance. When reminder is active S3 flashes in the display.

- The soft reminder reminds and recommends you to perform the descaling cycle.
- The hard reminder obligates you to perform the descaling. If you do not descale the appliance when the hard reminder is on, you cannot use the steam functions. You cannot disable the descaling reminder.

12.11 Steam generation system - Rinsing - S4

Remove all accessories.

The duration of the function is around 30 minutes.

The light in this function is off.

1. Put the tray on the first shelf position.
2. Fill the water drawer with fresh water to the maximum level until the acoustic signal sounds or the display shows the message.
3. Activate Rinsing function - S4. Refer to "Activating a cleaning function".

Remove the tray after the end of the procedure.

12.12 Removing and installing the door

You can remove the door and the internal glass panels to clean it. The number of glass panels is different for different models.

WARNING!
The door is heavy.

1. Open the door fully.
2. Fully press the clamping levers (A) on the two door hinges.

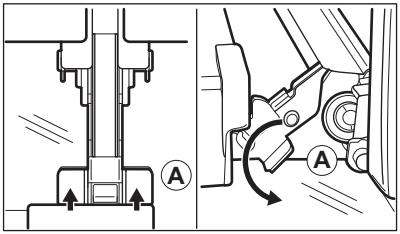

3. Close the oven door to the first opening position (approximately 70° angle).
4. Hold the door with one hand on each side and pull it away from the oven at an upwards angle.
5. Put the door with the outer side down on a soft cloth on a stable surface.
6. Hold the door trim (B) on the top edge of the door at the two sides and push inwards to release the clip seal.

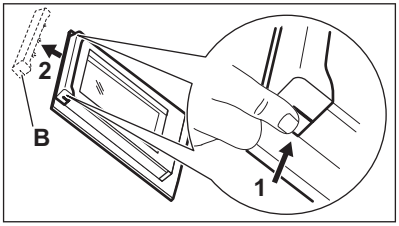

7. Pull the door trim to the front to remove it.
8. Hold the door glass panels on their top edge one by one and pull them up out of the guide.

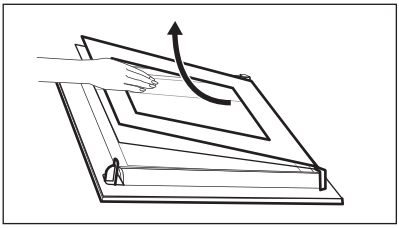

9. Clean the glass panel with water and soap. Dry the glass panel carefully.

When the cleaning is completed, do the above steps in the opposite sequence. Install the smaller panel first, then the larger and the door.

WARNING!
Make sure that the glasses are inserted in the correct position otherwise the surface of the door may overheat.

12.13 Replacing the lamp

WARNING!
Risk of electric shock.
The lamp can be hot.

1. Turn off the oven.

Wait until the oven is cooled down.

2. Disconnect the oven from the mains.
3. Put a cloth on the bottom of the cavity.

The top lamp

1. Turn the lamp glass cover to remove it.

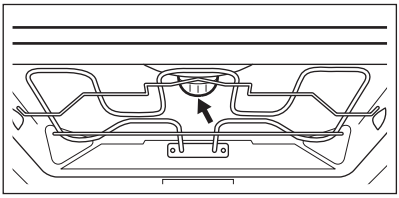

2. Remove the metal ring and clean the glass cover.
3. Replace the lamp with a suitable 300 °C heat-resistant lamp.
4. Attach the metal ring to the glass cover.
5. Install the glass cover.

13. TROUBLESHOOTING

WARNING!
Refer to Safety chapters.

13.1 What to do if...

Problem	Possible cause	Remedy
You cannot activate or operate the oven.	The oven is not connected to an electrical supply or it is connected incorrectly.	Check if the oven is correctly connected to the electrical supply (refer to the connection diagram if available).
The oven does not heat up.	The oven is deactivated.	Activate the oven.
The oven does not heat up.	The clock is not set.	Set the clock.
The oven does not heat up.	The necessary settings are not set.	Make sure that the settings are correct.
The oven does not heat up.	The automatic switch-off is activated.	Refer to "Automatic switch-off".
The oven does not heat up.	The Child Lock is on.	Refer to "Using the Child Lock".
The oven does not heat up.	The fuse is blown.	Make sure that the fuse is the cause of the malfunction. If the fuse is blown again and again, contact a qualified electrician.
The lamp does not operate.	The lamp is defective.	Replace the lamp.
The display does not show the time during the off status.	The display is deactivated.	Touch and at the same time to activate the display again.
The core temperature sensor does not operate.	The plug of the core temperature sensor is not correctly installed into the socket.	Put the plug of the core temperature sensor as far as possible into the socket.
It takes too long to cook the dishes or they cook too quickly.	The temperature is too low or too high.	Adjust the temperature if necessary. Follow the advice in the user manual.
Steam and condensation settle on the food and in the cavity of the oven.	You left the dish in the oven for too long.	Do not leave the dishes in the oven for longer than 15 - 20 minutes after the cooking process ends.

Problem	Possible cause	Remedy
The display shows "C2".	You want to start the Defrost function, but you did not remove the core temperature sensor plug from the socket.	Remove the core temperature sensor plug from the socket.
The display shows an error code that is not in this table.	There is an electrical fault.	• Deactivate the oven with the house fuse or the safety switch in the fuse box and activate it again. • If the display shows the error code again, contact the Customer Care Department.
The descaling procedure is interrupted before it finishes.	There was a power cut.	Repeat the procedure.
The descaling procedure is interrupted before it finishes.	The function was stopped by the user.	Repeat the procedure.
There is no water inside the grill- / roasting pan after the descaling procedure.	You did not fill the water drawer to the maximum level.	Check if the a descaling agent / water is present in the water drawer body. Repeat the procedure.
There is dirty water on the bottom of the cavity after the descaling cycle.	The grill- / roasting pan is on a wrong shelf position.	Remove the residual water and the descaling agent from the bottom of the oven. Put the grill- / roasting pan on the first shelf position.
The cleaning function is interrupted before it finishes.	There was a power cut.	Repeat the procedure.
The cleaning function is interrupted before it finishes.	The function was stopped by the user.	Repeat the procedure.
There is too much water on the bottom of the cavity after the end of the cleaning function.	You sprayed too much detergent in the appliance before the activation of the cleaning cycle.	Cover all parts of the cavity with a thin layer of the detergent. Spray the detergent evenly.
There is no good performance of the cleaning procedure.	The initial oven cavity temperature of the steam cleaning function was too high.	Repeat the cycle. Run the cycle when the appliance is cold.

Problem	Possible cause	Remedy
There is no good performance of the cleaning procedure.	You did not remove the side grids before the start of the cleaning procedure. They can transfer heat to the walls and decrease the performance.	Remove the side grids from the appliance and repeat the function.
There is no good performance of the cleaning procedure.	You did not remove the accessories from the appliance before the start of the cleaning procedure. They can compromise the steam cycle and decrease the performance.	Remove the accessories from the appliance and repeat the function.
The appliance is activated and does not heat up. The fan does not operate. The display shows **"Demo"**.	The demo mode is activated.	Refer to "Using the settings menu" in "Additional functions" chapter.

13.2 Service data

If you cannot find a solution to the problem yourself, contact your dealer or an Authorised Service Centre.

The necessary data for the service centre is on the rating plate. The rating plate is on the front frame of the oven cavity. Do not remove the rating plate from the oven cavity.

We recommend that you write the data here:	
Model (MOD.)	.....
Product number (PNC)	.....
Serial number (S.N.)	.....

14. ENERGY EFFICIENCY

14.1 Product Information Sheet

Product information according to EU 65-66/2014

Supplier's name	Electrolux
Model identification	EOB7S01X 944184894
Energy Efficiency Index	81.0
Energy efficiency class	A+

Energy consumption with a standard load, conventional mode	1.09 kWh/cycle
Energy consumption with a standard load, fan-forced mode	0.68 kWh/cycle
Number of cavities	1
Heat source	Electricity
Volume	70 l
Type of oven	Built-In Oven
Mass	39.0 kg

EN 60350-1 - Household electric cooking appliances - Part 1: Ranges, ovens, steam ovens and grills - Methods for measuring performance.

14.2 Energy saving



The oven contains features which help you save energy during everyday cooking.

Make sure that the oven door is closed properly when the oven operates. Do not open the door too often during cooking. Keep the door gasket clean and make sure it is well fixed in its position.

Use metal cookware to improve energy saving.

When possible, do not preheat the oven before cooking.

Keep breaks between baking as short as possible when you prepare a few dishes at one time.

Cooking with fan
When possible, use the cooking functions with fan to save energy.

Residual heat
If a programme with the Duration or End Time selection is activated and the cooking time is longer than 30 minutes, the heating elements automatically turn off earlier in some oven functions.

The fan and lamp continue to operate. When you turn off the oven, the display shows the residual heat. You can use that heat to keep the food warm.

When the cooking duration is longer than 30 minutes, reduce the oven temperature to minimum 3 - 10 minutes before the end of cooking. The residual heat inside the oven will continue to cook.

Use the residual heat to warm up other dishes.

Keep food warm
Choose the lowest possible temperature setting to use residual heat and keep a meal warm. The residual heat indicator or temperature appears on the display.

Cooking with the lamp off
Turn off the lamp during cooking. Turn it on only when you need it.

Moist Fan Baking
Function designed to save energy during cooking.

When you use this function the lamp automatically turns off after 30 seconds. You may turn on the lamp again but this action will reduce the expected energy savings.

Deactivating the display
You can turn off the display. Press and hold ⏲ and ∧ at the same time. To turn it on repeat this step.

15. ENVIRONMENTAL CONCERNS

Recycle materials with the symbol . Put the packaging in relevant containers to recycle it. Help protect the environment and human health by recycling waste of electrical and electronic appliances. Do not dispose of appliances marked with the symbol  with the household waste. Return the product to your local recycling facility or contact your municipal office.

www.electrolux.com/shop



867352844-A-132019

CE