FFB53940ZM
FFB53940ZW

EN **User Manual**
Dishwasher

USER MANUAL

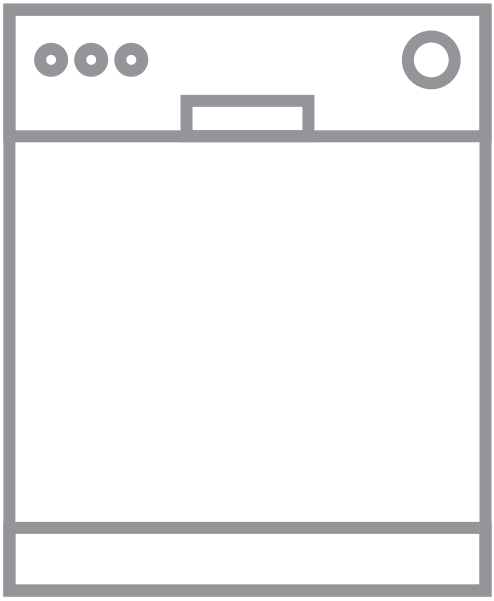

AEG

CONTENTS

1. SAFETY INFORMATION....2
2. SAFETY INSTRUCTIONS....4
3. PRODUCT DESCRIPTION....6
4. CONTROL PANEL....7
5. PROGRAMMES....8
6. SETTINGS....9
7. OPTIONS....12
8. BEFORE FIRST USE....12
9. DAILY USE....14
10. HINTS AND TIPS....15
11. CARE AND CLEANING....16
12. TROUBLESHOOTING....19
13. PRODUCT INFORMATION SHEET....23
14. ADDITIONAL TECHNICAL INFORMATION....23

FOR PERFECT RESULTS

Thank you for choosing this AEG product. We have created it to give you impeccable performance for many years, with innovative technologies that help make life simpler features you might not find on ordinary appliances. Please spend a few minutes reading to get the very best from it.
Visit our website for:



Get usage advice, brochures, trouble shooter, service information:
www.aeg.com/webselfservice



Register your product for better service:
www.registeraeg.com



Buy Accessories, Consumables and Original spare parts for your appliance:
www.aeg.com/shop

CUSTOMER CARE AND SERVICE

Always use original spare parts.
When contacting our Authorised Service Centre, ensure that you have the following data available: Model, PNC, Serial Number.
The information can be found on the rating plate.

⚠ Warning / Caution-Safety information

ⓘ General information and tips

Environmental information

Subject to change without notice.

1. ⚠ SAFETY INFORMATION

Before the installation and use of the appliance, carefully read the supplied instructions. The

manufacturer is not responsible for any injuries or damages that are the result of incorrect installation or usage. Always keep the instructions in a safe and accessible location for future reference.

1.1 Children and vulnerable people safety

- This appliance can be used by children aged from 8 years and above and persons with reduced physical, sensory or mental capabilities or lack of experience and knowledge if they have been given supervision or instruction concerning the use of the appliance in a safe way and understand the hazards involved.
- Children between 3 and 8 years of age and persons with very extensive and complex disabilities shall be kept away from the appliance unless continuously supervised.
- Children of less than 3 years of age should be kept away from the appliance unless continuously supervised.
- Do not let children play with the appliance.
- Keep detergents away from children.
- Keep children and pets away from the appliance when the door is open.
- Children shall not carry out cleaning and user maintenance of the appliance without supervision.

1.2 General Safety

- This appliance is intended to be used in household and similar applications such as:
  - farm houses; staff kitchen areas in shops, offices and other working environments;
  - by clients in hotels, motels, bed & breakfast and other residential type environments.
- Do not change the specification of this appliance.
- The operating water pressure (minimum and maximum) must be between 0.5 (0.05) / 8 (0.8) bar (MPa)
- Obey the maximum number of 14 place settings.

- If the supply cord is damaged, it must be replaced by the manufacturer, its Authorised Service Centre or similarly qualified persons in order to avoid a hazard.
- Put the cutlery in the cutlery basket with the sharp ends pointing down or put them in the cutlery drawer in a horizontal position with the sharp edges down.
- Do not leave the appliance with the open door unattended to avoid stepping accidentally onto it.
- Before any maintenance operation, deactivate the appliance and disconnect the mains plug from the socket.
- Do not use high pressure water sprays and/or steam to clean the appliance.
- If the appliance has ventilation openings in the base, they must not be covered e.g. by a carpet.
- The appliance is to be connected to the water mains using the new supplied hose-sets. Old hose sets must not be reused.

2. SAFETY INSTRUCTIONS

2.1 Installation

WARNING!
Only a qualified person must install this appliance.

- Remove all the packaging.
- Do not install or use a damaged appliance.
- Follow the installation instructions supplied with the appliance.
- Always take care when moving the appliance as it is heavy. Always use safety gloves and enclosed footwear.
- Do not install or use the appliance where the temperature is less than 0 °C.
- Install the appliance in a safe and suitable place that meets installation requirements.

2.2 Electrical connection

WARNING!
Risk of fire and electric shock.

- The appliance must be earthed.
- Make sure that the parameters on the rating plate are compatible with the electrical ratings of the mains power supply.
- Always use a correctly installed shockproof socket.
- Do not use multi-plug adapters and extension cables.
- Make sure not to cause damage to the mains plug and to the mains cable. Should the mains cable need to be replaced, this must be carried out by our Authorised Service Centre.
- Connect the mains plug to the mains socket only at the end of the installation. Make sure that there is access to the mains plug after the installation.

- Do not pull the mains cable to disconnect the appliance. Always pull the mains plug.
- This appliance complies with the E.E.C. Directives.
- UK and Ireland only. This appliance is fitted with a 13 A mains plug. If it is necessary to change the mains plug fuse, use only a 13 A ASTA (BS 1362) fuse.

2.3 Water connection

- Do not cause damage to the water hoses.
- Before connection to new pipes, pipes not used for a long time, where repair work has been carried out or new devices fitted (water meters, etc.), let the water flow until it is clean and clear.
- Ensure that there are no visible water leaks during and after the first use of the appliance.
- The water inlet hose has a safety valve and a sheath with an inner mains cable.

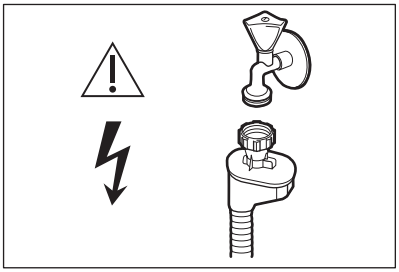

WARNING!
Dangerous voltage.

- If the water inlet hose is damaged, immediately close the water tap and disconnect the mains plug from the mains socket. Contact the Authorised Service Centre to replace the water inlet hose.

2.4 Use

- Do not put flammable products or items that are wet with flammable products in, near or on the appliance.
- Dishwasher detergents are dangerous. Follow the safety instructions on the detergent packaging.
- Do not drink and play with the water in the appliance.
- Do not remove the dishes from the appliance until the programme is complete. Some detergent may remain on the dishes.
- Do not sit or stand on the open door of the appliance.
- The appliance can release hot steam if you open the door while a programme operates.

2.5 Service

- To repair the appliance contact the Authorised Service Centre.
- Use original spare parts only.

2.6 Disposal

WARNING!
Risk of injury or suffocation.

- Disconnect the appliance from the mains supply.
- Cut off the mains cable and discard it.
- Remove the door catch to prevent children and pets to get closed in the appliance.

3. PRODUCT DESCRIPTION

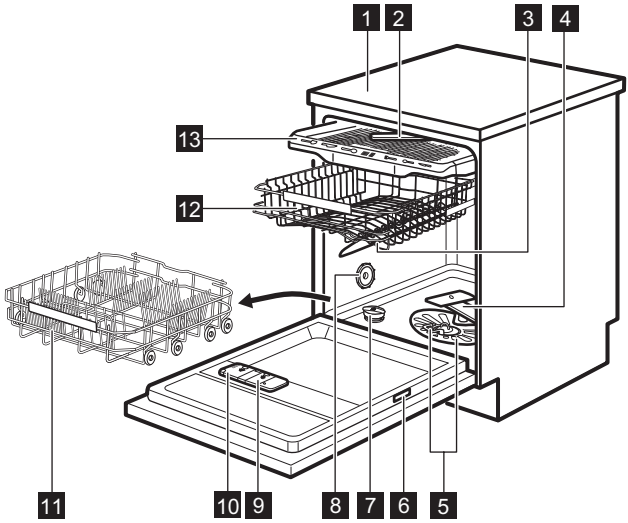

1 Worktop
2 Top spray arm
3 Upper spray arm
4 Lower spray arm
5 Filters
6 Rating plate
7 Salt container
8 Air vent
9 Rinse aid dispenser
10 Detergent dispenser
11 Lower basket
12 Upper basket
13 Cutlery drawer

4. CONTROL PANEL

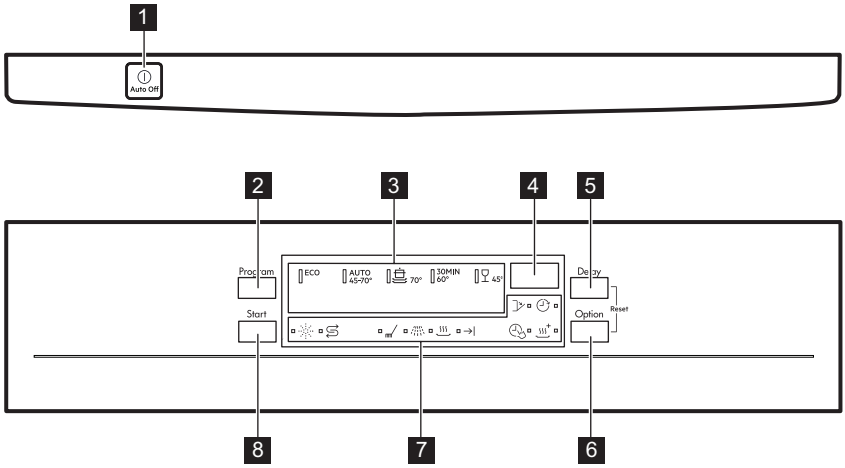

1 On/off button
2 **Program** button
3 Programme indicators
4 Display
5 **Delay** button
6 **Option** button
7 Indicators
8 **Start** button

4.1 Indicators

Indicator	Description
	Salt indicator. It is on when the salt container needs refilling. It is always off while the programme operates.
	Rinse aid indicator. It is on when the rinse aid dispenser needs refilling. It is always off while the programme operates.
	Washing phase indicator. It is on when the washing phase operates.
	Rinsing phase indicator. It is on when the rinsing phase operates.
	Drying phase indicator. It is on when the drying phase operates.
	End indicator. It is on when the programme is completed.
	Door indicator. It is on when the appliance door is open or not correctly closed.
	Delay indicator.

Indicator	Description
	TimeSaver indicator.
	XtraDry indicator.

5. PROGRAMMES

The order of the programmes in the table may not reflect their sequence on the control panel.

Programme	Degree of soil Type of load	Programme phases	Options
ECO 1)	• Normal soil • Crockery and cutlery	• Prewash • Wash 50 °C • Rinses • Dry	• XtraDry
AUTO SENSE 2)	• All • Crockery, cutlery, pots and pans	• Prewash • Wash from 45 °C to 70 °C • Rinses • Dry	• XtraDry
3)	• Heavy soil • Crockery, cutlery, pots and pans	• Prewash • Wash 70 °C • Rinses • Dry	• TimeSaver • XtraDry
30MIN 4)	• Light soil • Crockery and cutlery	• Wash 60 °C • Rinses	• XtraDry
5)	• Normal or light soil • Delicate crockery and glassware	• Prewash • Wash 45 °C • Rinses • Dry	• XtraDry

1) This programme offers the most efficient use of water and energy consumption for crockery and cutlery with normal soil. This is the standard programme for test institutes.

2) The appliance senses the degree of soil and the quantity of items in the baskets . It automatically adjusts the temperature and quantity of water, energy consumption and programme duration.

3) This programme is designed to wash heavily soiled items with high water pressure and at a high temperature.

4) This programme is suitable for washing a load or a half load with fresh or light soil in a short time.

5) This programme controls the temperature of the water to provide special care for delicate items, glassware in particular.

5.1 Consumption values

Programme [1]	Water (l)	Energy (kWh)	Duration (min)
ECO	10.5	0.832	235
AUTO SENSE	8 - 15	0.7 - 1.7	46-170
	12.5 - 14.5	1.4 - 1.7	170 - 190
30MIN	10	0.9	30
	10 - 14	0.8 - 1.0	82 - 92

[1] The pressure and the temperature of the water, the variations of the mains supply, the options and the quantity of dishes can change the values.

5.2 Information for test institutes

To receive the necessary information for conducting performance tests (e.g. according to EN60436), send an email to:

info.test@dishwasher-production.com

In your request please include the product number code (PNC) found on the rating plate.

For any other questions regarding your dishwasher please refer to the service book provided with your appliance.

6. SETTINGS

6.1 Programme selection mode and user mode

When the appliance is in programme selection mode it is possible to set a programme and to enter the user mode.

Settings available in the user mode:

- The level of water softener according to the water hardness.
- Activation or deactivation of the rinse aid empty notification.
- Activation or deactivation of AirDry.

As the appliance stores the saved settings, there is no need to configure it before every cycle.

How to set the programme selection mode

The appliance is in programme selection mode when the programme indicator ECO is on and the display shows the programme duration.

After activation, the appliance is in programme selection mode by default. If not, set the programme selection mode the following way:

Press and hold simultaneously **Delay** and **Option** until the appliance is in programme selection mode.

How to enter user mode

Make sure the appliance is in programme selection mode.

To enter user mode, press and hold simultaneously **Delay** and **Option** until the indicators ECO, AUTO and flash and the display is blank.

6.2 The water softener

The water softener removes minerals from the water supply, which would have a negative effect on the washing results and on the appliance.

The higher the content of these minerals, the harder your water is. Water hardness is measured in equivalent scales.

The water softener should be adjusted according to the hardness of the water in your area. Your local water authority can advise you on the hardness of the water in your area. It is important to set the right level of the water softener to assure good washing results.

Softening hard water increases the consumption of water and energy as well as the programme duration. The higher the level of water softener, the higher the consumption and the longer the duration.

Water hardness

German degrees (°dH)	French degrees (°fH)	mmol / l	Clarke degrees	Water softener level
47 - 50	84 - 90	8.4 - 9.0	58 - 63	10
43 - 46	76 - 83	7.6 - 8.3	53 - 57	9
37 - 42	65 - 75	6.5 - 7.5	46 - 52	8
29 - 36	51 - 64	5.1 - 6.4	36 - 45	7
23 - 28	40 - 50	4.0 - 5.0	28 - 35	6
19 - 22	33 - 39	3.3 - 3.9	23 - 27	5 **1)**
15 - 18	26 - 32	2.6 - 3.2	18 - 22	4
11 - 14	19 - 25	1.9 - 2.5	13 - 17	3
4 - 10	7 - 18	0.7 - 1.8	5 - 12	2
<4	<7	<0.7	< 5	1 **2)**

1) Factory setting.

2) Do not use salt at this level.

Regardless of the type of detergent used, set the proper water hardness level to keep the salt refill indicator active.

Multi-tabs containing salt are not effective enough to soften hard water.

How to set the water softener level

Make sure the appliance is in user mode.

1. Press **Program**.
   - The indicators **AUTO** and ⏣ are off.
   - The indicator **ECO** still flashes.
   - The display shows the current setting: e.g. 5 L = level 5.
2. Press **Program** repeatedly to change the setting.
3. Press the on/off button to confirm the setting.

6.3 The rinse aid empty notification

The rinse aid helps to dry the dishes without streaks and stains. It is automatically released during the hot rinse phase.

When the rinse aid chamber is empty, the rinse aid indicator is turned on notifying to refill rinse aid. If the drying results are satisfactory while using multi-

tablets only, it is possible to deactivate the notification for refilling rinse aid. However, for best drying performance, always use rinse aid.

If standard detergent or multi-tablets without rinse aid are used, activate the notification to keep the rinse aid refill indicator active.

How to deactivate the rinse aid empty notification

Make sure the appliance is in user mode.

1. Press **Start**.
   - The indicators ECO and ⏣ are off.
   - The indicator AUTO still flashes.
   - The display shows the current setting.
     - 1d = rinse aid empty notification activated.
     - 0d = rinse aid empty notification deactivated.
2. Press **Start** to change the setting.
3. Press on/off to confirm the setting.

6.4 AirDry

AirDry improves the drying results with less energy consumption.

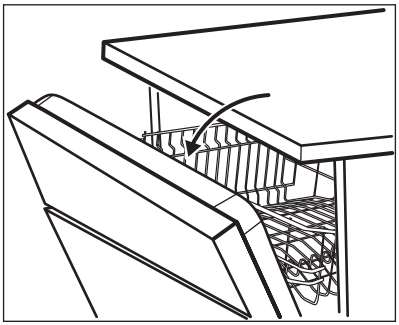

During the drying phase, the door opens automatically and remains ajar.

CAUTION!
Do not try to close the appliance door within 2 minutes after automatic opening. This can cause damage to the appliance.

AirDry is automatically activated with all programmes excluding ⛆ (if applicable).

To improve the drying performance refer to the XtraDry option or activate AirDry.

CAUTION!
If children have access to the appliance, it is advised to deactivate AirDry as opening the door may pose a danger.

How to deactivate AirDry

Make sure the appliance is in user mode.

1. Press **Delay**.
   - The indicators ECO and AUTO are off.
   - The indicator ⏣ still flashes.
   - The display shows the current setting: 1o = AirDry activated.
2. Press **Delay** to change the setting: 0o = AirDry deactivated.
3. Press on/off to confirm the setting.

7. OPTIONS

Desired options must be activated every time before you start a programme. It is not possible to activate or deactivate options while a programme is running.

The Option button toggles between the available options and their possible combinations.

Not all options are compatible with each other. If you select non compatible options, the appliance automatically deactivates one or more of them. Only the indicators of the still active options are on.

If an option is not applicable to a programme, the related indicator is off or it flashes quickly for a few seconds and then goes out.

Activating options can affect the water and energy consumption as well as the programme duration.

7.1 XtraDry

Activate this option to boost the drying performance. With XtraDry on, the duration of some programmes, water consumption and the last rinse temperature can be affected.

XtraDry is a permanent option for all programmes other than ECO and need not to be selected at every cycle.

In the other programmes the setting of XtraDry is permanent and it is automatically used in next cycles. This configuration can be changed at any time.

Every time ECO is activated, XtraDry is off and needs to be chosen manually.

Activating XtraDry deactivates TimeSaver and vice versa.

How to activate XtraDry

Press **Option** until the indicator is on. The display shows the updated programme duration.

7.2 TimeSaver

This option increases the pressure and the temperature of the water. The washing and the drying phases are shorter.

The total programme duration decreases by approximately 50%.

The washing results are the same as with the normal programme duration. The drying results can decrease.

How to activate TimeSaver

Press **Option** until the indicator is on. The display shows the updated programme duration.

8. BEFORE FIRST USE

1. **Make sure that the current level of the water softener agrees with the hardness of the water supply. If not, adjust the level of the water softener.**
2. Fill the salt container.
3. Fill the rinse aid dispenser.
4. Open the water tap.
5. Start a programme to remove any processing residuals that can still be inside the appliance. Do not use

detergent and do not put dishes in the baskets.

After starting the programme, the appliance recharges the resin in the water softener for up to 5 minutes. The washing phase starts only after this procedure is complete. The procedure is repeated periodically.

8.1 The salt container

CAUTION!
Use rough salt designed for dishwashers only. Fine salt increases the risk of corrosion.

The salt is used to recharge the resin in the water softener and to assure good washing results in daily use.

How to fill the salt container

1. Turn the cap of the salt container counterclockwise and remove it.
2. Put 1 litre of water in the salt container (only for the first time).
3. Fill the salt container with 1 kg of salt (until it is full).

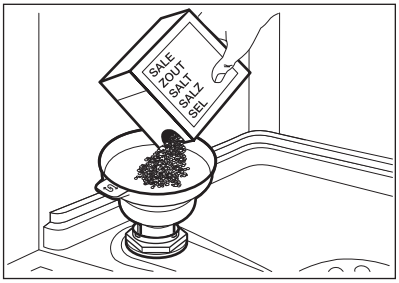

4. Carefully shake the funnel by its handle to get the last granules inside.
5. Remove the salt around the opening of the salt container.

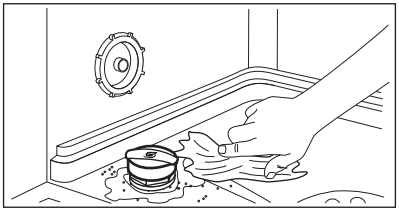

6. Turn the cap of the salt container clockwise to close the salt container.

CAUTION!
Water and salt can come out of the salt container when you fill it. After you fill the salt container, immediately start a programme to prevent corrosion.

8.2 How to fill the rinse aid dispenser

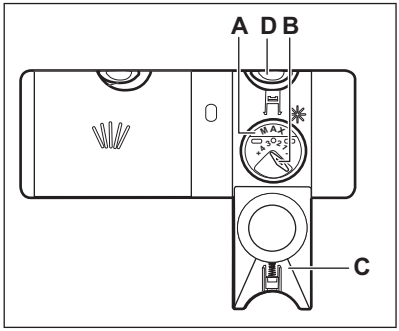

CAUTION!
Only use rinse aid specifically designed for dishwashers.

1. Press the release button (**D**) to open the lid (**C**).
2. Fill the dispenser (**A**) until the rinse aid reaches the marking ''MAX''.
3. Remove the spilled rinse aid with an absorbent cloth to prevent too much foam.
4. Close the lid. Make sure that the release button locks into position.

You can turn the selector of the released quantity (**B**) between position 1 (lowest quantity) and position 4 or 6 (highest quantity).

9. DAILY USE

1. Open the water tap.
2. Press the on/off button to activate the appliance.

Make sure that the appliance is in programme selection mode.

- If the salt indicator is on, fill the salt container.
- If the rinse aid indicator is on, fill the rinse aid dispenser.

3. Load the baskets.
4. Add the detergent.
5. Set and start a programme suitable for the type of load and the degree of soil.

9.1 Using the detergent

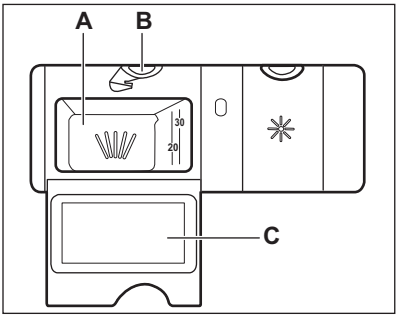

CAUTION!
Only use detergent specifically designed for dishwashers.

1. Press the release button (**B**) to open the lid (**C**).
2. Put the detergent, in powder or tablets, in the compartment (**A**).
3. If the programme has a prewash phase, put a small quantity of detergent on the inner part of the appliance door.
4. Close the lid. Make sure that the release button locks into position.

9.2 Setting and starting a programme

The Auto Off function

This function decreases energy consumption by deactivating automatically the appliance when it is not operating.

The function comes into operation:

- 5 minutes after the completion of the programme.
- After 5 minutes if the programme has not started.

Starting a programme

1. Press the on/off button to activate the appliance. Make sure that the appliance is in programme selection mode and the door is closed.
2. Press **Program** again and again until the indicator of the desired programme is on.

The display shows the programme duration.

3. Set the applicable options.
4. Press **Start** to start the programme.
   - The indicator of the running phase is on.
   - The programme duration starts to decrease with steps of 1 minute.

Starting a programme with delay start

1. Set a programme.
2. Press **Delay** repeatedly until the display shows the desired delay time (from 1 to 24 hours).
3. Press **Start** to begin the countdown.
   - The indicator is on.
   - The remaining time counts down in hours. The final hour is displayed in minutes.

When the countdown is completed, the programme starts and the indicator of the running phase is on. The indicator is off.

Opening the door while the appliance operates

Opening the door while a programme is running stops the appliance. It may affect the energy consumption and the programme duration. After closing the

door, the appliance continues from the point of interruption.

If the door is opened for more than 30 seconds during the drying phase, the running programme ends. It does not happen if the door is opened by AirDry function.

Do not try to close the appliance door within 2 minutes after AirDry automatically opens it, as this may cause damage to the appliance.
If, afterwards, the door is closed for another 3 minutes, the running programme ends.

Cancelling the delay start while the countdown operates

When you cancel the delay start you have to set the programme and options again.

Press simultaneously **Delay** and **Option** until the appliance is in programme selection mode.

Cancelling the programme

Press and hold simultaneously **Delay** and **Option** until the appliance is in programme selection mode.
Make sure that there is detergent in the detergent dispenser before you start a new programme.

End of the programme

All buttons are inactive except for the on/off button.

1. Press the on/off button or wait for the Auto Off function to automatically deactivate the appliance.
   If you open the door before the activation of Auto Off, the appliance is automatically deactivated.
2. Close the water tap.

10. HINTS AND TIPS

10.1 General

Follow the hints below to ensure optimal cleaning and drying results in daily use and to help you protect the environment.

- Remove larger residues of food from the dishes into the waste bin.
- Do not pre-rinse dishes by hand. When needed, select a programme with a prewash phase.
- Always use the whole space of the baskets.
- Make sure that items in the baskets do not touch or cover each other. Only then can the water completely reach and wash the dishes.
- You can use dishwasher detergent, rinse aid and salt separately or you can use the multi-tablets (e.g. ''All in 1''). Follow the instructions on the packaging.
- Select a programme according to the type of load and the degree of soil.

ECO offers the most efficient use of water and energy consumption.

10.2 Using salt, rinse aid and detergent

- Only use salt, rinse aid and detergent for dishwasher. Other products can cause damage to the appliance.
- In areas with hard and very hard water we recommend to use plain dishwasher detergent (powder, gel, tablets containing no additional agents), rinse aid and salt separately for optimal cleaning and drying results.
- At least once a month run the appliance with the use of appliance cleaner which is particularly suitable for this purpose.
- Detergent tablets do not fully dissolve with short programmes. To prevent detergent residues on the tableware,

we recommend that you use the tablets with long programmes.
- Do not use more than the correct quantity of detergent. Refer to the instructions on the detergent packaging.

10.3 What to do if you want to stop using multi-tablets

Before you start to use separately detergent, salt and rinse aid do the following procedure.

1. Set the highest level of the water softener.
2. Make sure that the salt and rinse aid containers are full.
3. Start the shortest programme with a rinsing phase. Do not add detergent and do not load the baskets.
4. When the programme is completed, adjust the water softener according to the water hardness in your area.
5. Adjust the released quantity of rinse aid.
6. Activate the rinse aid empty notification.

10.4 Loading the baskets

- Use the appliance to wash dishwasher-safe items only.
- Do not wash in the appliance items made of wood, horn, aluminium, pewter and copper.
- Do not wash in the appliance items that can absorb water (sponges, household cloths).
- Remove large food residues from dishes.
- Soak cookware with burnt-on food before washing it in the appliance.
- Put hollow items (cups, glasses and pans) with the opening facing downwards.
- Make sure that glasses do not touch each other.
- Put light items in the upper basket. Make sure that the items do not move freely.
- Put cutlery and small items in the cutlery drawer.
- Move the upper basket upwards to accommodate large items in the lower basket.
- Make sure that the spray arms can move freely before you start a programme.

10.5 Before starting a programme

Before you start the selected programme, make sure that:

- The filters are clean and correctly installed.
- The cap of the salt container is tight.
- The spray arms are not clogged.
- There is enough salt and rinse aid (unless you use multi-tablets).
- The arrangement of the items in the baskets is correct.
- The programme is suitable to the type of load and the degree of soil.
- The correct quantity of detergent is used.

10.6 Unloading the baskets

1. Let the tableware cool down before you remove it from the appliance. Hot items can be easily damaged.
2. First remove items from the lower basket, then from the upper basket.

After the programme is completed, water can still remain on the inside surfaces of the appliance.

11. CARE AND CLEANING

WARNING!
Before maintenance, deactivate the appliance and disconnect the mains plug from the main socket.

Dirty filters and clogged spray arms decrease the washing results. Make a check regularly and, if necessary, clean them.

11.1 Cleaning the filters

The filter system is made of 3 parts.

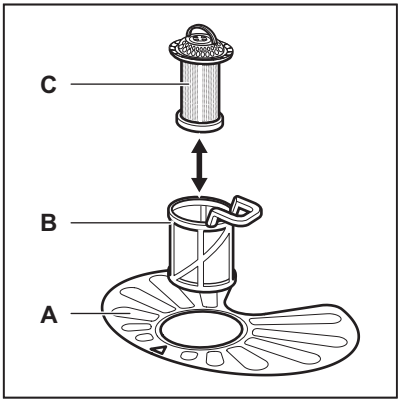

1. Turn the filter (**B**) counterclockwise and remove it.

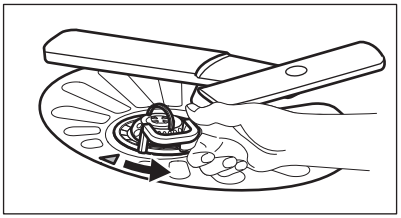

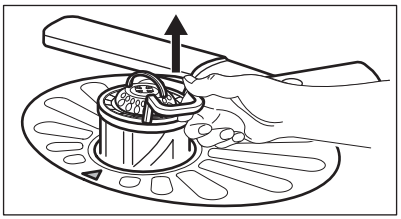

2. Remove the filter (**C**) out of filter (**B**).
3. Remove the flat filter (**A**).

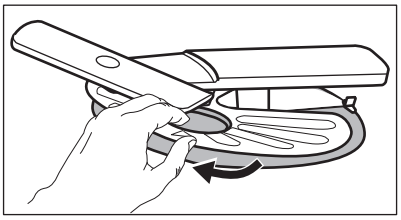

4. Wash the filters.

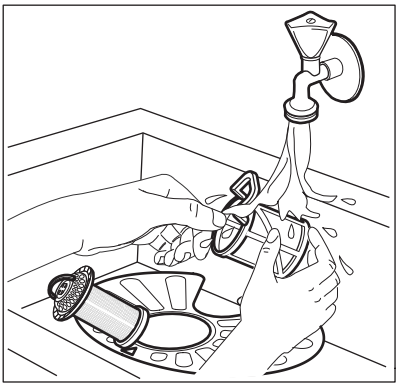

5. Make sure that there are no residues of food or soil in or around the edge of the sump.
6. Put back in place the flat filter (**A**). Make sure that it is correctly positioned under the 2 guides.

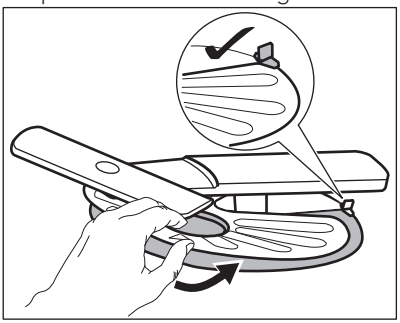

7. Reassemble the filters (**B**) and (**C**).
8. Put back the filter (**B**) in the flat filter (**A**). Turn it clockwise until it locks.

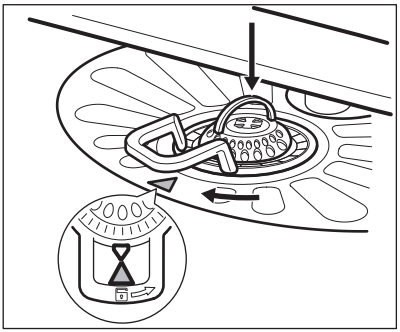

CAUTION!
An incorrect position of the filters can cause bad washing results and damage to the appliance.

11.2 Cleaning the lower spray arm

We recommend to clean the lower spray arm regularly to prevent soil from clogging the holes.

Clogged holes can cause unsatisfactory washing results.

1. To remove the lower spray arm, pull it upwards.

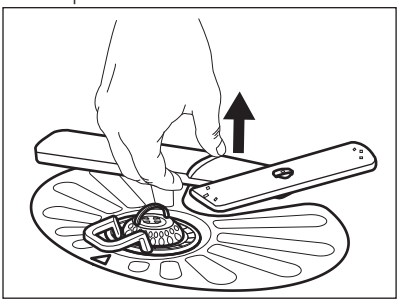

2. Wash the spray arm under running water. Use a thin pointed tool, e.g. a toothpick, to remove particles of soil from the holes.

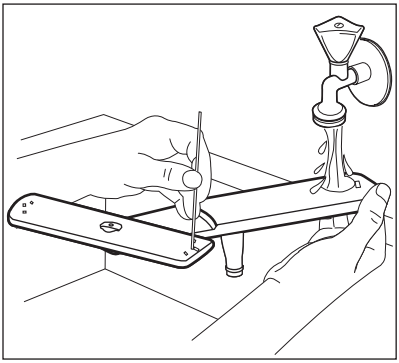

3. To install the spray arm back, press it downwards.

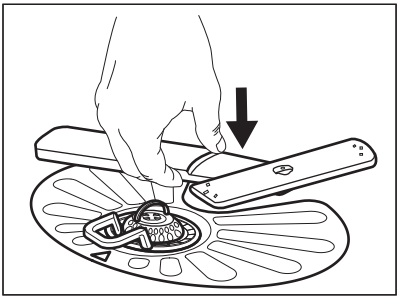

11.3 Cleaning the top spray arm

We recommend to clean the top spray arm regularly to prevent soil from clogging the holes. Clogged holes can cause unsatisfactory washing results.

The top spray arm is placed on the ceiling of the appliance. The spray arm (**C**) is installed in the delivery tube (**A**) with the mounting element (**B**).

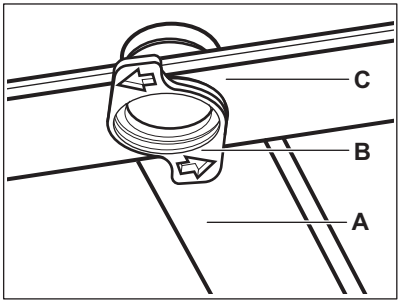

1. Release the stoppers on the sides of the sliding rails of the cutlery drawer and pull the drawer out.

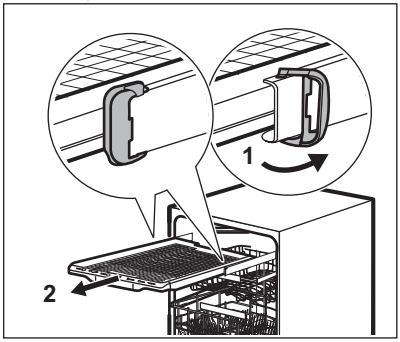

2. Move the upper basket to the lowest level to reach the spray arm more easily.
3. To detach the spray arm from the delivery tube, turn the mounting element counterclockwise and pull the spray arm downwards.
4. Wash the spray arm under running water. Use a thin pointed tool, e.g. a toothpick, to remove particles of soil from the holes. Run the water through the holes to wash soil particles away from the inside.

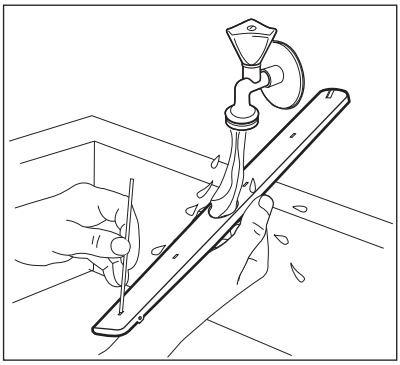

5. To install the spray arm back, insert the mounting element in the spray arm and fix it in the delivery tube by turning it clockwise. Make sure that the mounting element locks into place.
6. Install the cutlery drawer on the sliding rails and block the stoppers.

11.4 External cleaning

- Clean the appliance with a moist soft cloth.
- Only use neutral detergents.
- Do not use abrasive products, abrasive cleaning pads or solvents.

11.5 Internal cleaning

- Carefully clean the appliance, including the rubber gasket of the door, with a soft damp cloth.
- To maintain the performance of your appliance, use a cleaning product designed specifically for dishwashers at least once every two months. Carefully follow the instructions on the packaging of the product.
- Do not use abrasive products, abrasive cleaning pads, sharp tools, strong chemicals, scourer or solvents.
- Using short-duration programmes regularly can cause grease and limescale buildup inside the appliance. Run long-duration programmes at least twice a month to prevent the buildup.

12. TROUBLESHOOTING

If the appliance does not start or it stops during operation, first check if you can solve the problem by yourself with the help of the information in the table or contact an Authorised Service Centre.

WARNING!
Repairs not properly done may result in serious risk to the safety of the user. Any repairs must be performed by qualified personnel.

With some problems, the display shows an alarm code.

The majority of problems that can occur can be solved without the need to contact an Authorised Service Centre.

Problem and alarm code	Possible cause and solution
You cannot activate the appliance.	• Make sure that the mains plug is connected to the mains socket. • Make sure that there is no damaged fuse in the fuse box.

Problem and alarm code	Possible cause and solution
The program does not start.	• Make sure that the appliance door is closed. • Press **Start**. • If the delay start is set, cancel the setting or wait for the end of the countdown. • The appliance has started the procedure to recharge the resin inside the water softener. The duration of the procedure is approximately 5 minutes.
The appliance does not fill with water. The display shows i10 or i11 .	• Make sure that the water tap is open. • Make sure that the pressure of the water supply is not too low. For this information, contact your local water authority. • Make sure that the water tap is not clogged. • Make sure that the filter in the inlet hose is not clogged. • Make sure that the inlet hose has no kinks or bends.
The appliance does not drain the water. The display shows i20.	• Make sure that the sink spigot is not clogged. • Make sure that the filter in the outlet hose is not clogged. • Make sure that the interior filter system is not clogged. • Make sure that the drain hose has no kinks or bends.
The anti-flood device is on. The display shows i30.	• Close the water tap and contact an Authorised Service Centre.
The appliance stops and starts more times during operation.	• It is normal. It provides optimal cleaning results and energy savings.
The program lasts too long.	• Select the TimeSaver option to shorten the program time. • If the delayed start option is set, cancel the delay setting or wait for the end of the countdown.
The remaining time in the display increases and skips nearly to the end of program time.	• This is not a defect. The appliance is working correctly.
Small leak from the appliance door.	• The appliance is not levelled. Loosen or tighten the adjustable feet (if applicable). • The appliance door is not centred on the tub. Adjust the rear foot (if applicable).
The appliance door is difficult to close.	• The appliance is not levelled. Loosen or tighten the adjustable feet (if applicable). • Parts of the tableware are protruding from the baskets.
Rattling/knocking sounds from inside the appliance.	• The tableware is not properly arranged in the baskets. Refer to basket loading leaflet. • Make sure that the spray arms can rotate freely.

Problem and alarm code	Possible cause and solution
The appliance trips the circuit-beaker.	• The amperage is insufficient to supply simultaneously all the appliances in use. Check the socket amperage and the capacity of the meter or turn off one of the appliances in use. • Internal electrical fault of the appliance. Contact an Authorised Service Centre.

Refer to **"Before first use"**, **"Daily use"**, or **"Hints and tips"** for other possible causes.

Once you have checked the appliance, deactivate and activate the appliance. If the problem occurs again, contact an Authorised Service Centre.

For alarm codes not described in the table, contact an Authorised Service Centre.

12.1 The washing and drying results are not satisfactory

Problem	Possible cause and solution
Poor washing results.	• Refer to **"Daily use"**, **"Hints and tips"** and the basket loading leaflet. • Use more intensive washing programmes. • Clean spray arm jets and filter. Refer to **"Care and Cleaning"**.
Poor drying results.	• Tableware was left for too long inside the closed appliance. • There is no rinse aid or the dosage of rinse aid is not sufficient. Set the rinse aid dispenser to a higher level. • Plastic items may need to be towel dried. • For the best drying performance activate the option XtraDry and set AirDry. • We recommend to use rinse aid always, even in combination with multi-tablets.
There are whitish streaks or bluish layers on glasses and dishes.	• The released quantity of rinse aid is too high. Adjust the rinse aid level to a lower level. • The quantity of detergent is too high.
There are stains and dry water drops on glasses and dishes.	• The released quantity of rinse aid is not sufficient. Adjust the rinse aid level to a higher level. • The quality of the rinse aid can be the cause.

Problem	Possible cause and solution
The dishes are wet.	• For the best drying performance activate the option XtraDry and set AirDry . • The programme does not have a drying phase or has a drying phase with low temperature. • The rinse aid dispenser is empty. • The quality of the rinse aid can be the cause. • The quality of the multi-tablets can be the cause. Try a different brand or activate the rinse aid dispenser and use the rinse aid and multi-tablets together.
The interior of the appliance is wet.	• This is not a defect of the appliance. Humid air condensates on the appliance walls.
Unusual foam during washing.	• Use the detergent designed specifically for dishwashers. • There is a leak in the rinse aid dispenser. Contact an Authorised Service Centre.
Traces of rust on cutlery.	• There is too much salt in the water used for washing. Refer to **"The water softener"**. • Silver and stainless steel cutlery were placed together. Avoid to put silver and stainless steel items close together.
There are residues of detergent in the dispenser at the end of the programme.	• The detergent tablet was stuck in the dispenser and therefore was not completely washed away by water. • Water cannot wash away the detergent from the dispenser. Make sure that the spray arms are not blocked or clogged. • Make sure that items in the baskets do not impede the lid of the detergent dispenser from opening.
Odours inside the appliance.	• Refer to **"Internal cleaning"**.
Limescale deposits on the tableware, on the tub and on the inside of the door.	• The level of salt is low, check the refill indicator. • The cap of the salt container is loose. • Your tap water is hard. Refer to **"The water softener"**. • Use salt and set regeneration of the water softener even when multi-functional tablets are used. Refer to **"The water softener"**. • Refer to **"Internal cleaning"**. • Try a different detergent. • Contact the detergent manufacturer.
Dull, discoloured or chipped tableware.	• Make sure that only dishwasher-safe items are washed in the appliance. • Load and unload the basket carefully. Refer to basket loading leaflet. • Place delicate items in the upper basket. • For washing delicate items and glassware, select the dedicated programme. Refer to **"Programmes"**.

Refer to **"Before first use"**, **"Daily use"** or **"Hints and tips"** for other possible causes.

13. PRODUCT INFORMATION SHEET

Trade Mark	AEG
Model	FFB53940ZM 911514051 FFB53940ZW 911514053
Rated capacity (standard place settings)	14
Energy efficiency class	A+++
Energy consumption in kWh per year, based on 280 standard cleaning cycles using cold water fill and the consumption of the low power modes. The actual energy consumption will depend on how the appliance is used.	237
Energy consumption of standard cleaning cycle (kWh)	0.832
Power consumption in off mode (W)	0.50
Power consumption in left-on mode (W)	5.0
Water consumption in litres per year, based on 280 standard cleaning cycles. The actual water consumption will depend on how the appliance is used	2940
Drying efficiency class on a scale from G (least efficient) to A (most efficient)	A
The 'standard programme' is the standard cleaning cycle to which the information in the label and the fiche relates. This programme is suitable to clean normally soiled tableware and is the most efficient programme in terms of combined energy and water consumption. It is indicated as "Eco" programme.	ECO
Programme time of standard cleaning cycle (min)	235
Duration of the left-on mode (min)	5
Sound power level (db(A) re 1pW)	44
Built in appliance Y/N	No

14. ADDITIONAL TECHNICAL INFORMATION

Dimensions	Width / height / depth (mm)	600 / 850 / 625

Electrical connection [1]	Voltage (V)	220 - 240
	Frequency (Hz)	50
Water supply pressure	Min. / max. bar (MPa)	0.5 (0.05) / 8 (0.8)
Water supply	Cold water or hot water [2]	max 60 °C

[1] Refer to the rating plate for other values.

[2] If the hot water comes from alternative source of energy (e.g. solar panels), use the hot water supply to decrease energy consumption.

15. ENVIRONMENTAL CONCERNS

Recycle materials with the symbol ♺. Put the packaging in relevant containers to recycle it. Help protect the environment and human health by recycling waste of electrical and electronic appliances. Do not dispose of appliances marked with the symbol with the household waste. Return the product to your local recycling facility or contact your municipal office.

www.aeg.com/shop



156932340-A-482018

CE

AEG