EOD5H40X



EN Oven

User Manual

Electrolux

CONTENTS

1. SAFETY INFORMATION....3
2. SAFETY INSTRUCTIONS....4
3. PRODUCT DESCRIPTION....7
4. CONTROL PANEL....7
5. BEFORE FIRST USE....8
6. DAILY USE....8
7. CLOCK FUNCTIONS....11
8. USING THE ACCESSORIES....12
9. ADDITIONAL FUNCTIONS....13
10. HINTS AND TIPS....13
11. CARE AND CLEANING....25
12. TROUBLESHOOTING....28
13. INSTALLATION....30
14. ENERGY EFFICIENCY....31

WE'RE THINKING OF YOU

Thank you for purchasing an Electrolux appliance. You've chosen a product that brings with it decades of professional experience and innovation. Ingenious and stylish, it has been designed with you in mind. So whenever you use it, you can be safe in the knowledge that you'll get great results every time.
Welcome to Electrolux.
Visit our website for:

Get usage advice, brochures, trouble shooter, service information:
www.electrolux.com/webselfservice

Register your product for better service:
www.registerelectrolux.com

Buy Accessories, Consumables and Original spare parts for your appliance:
www.electrolux.com/shop

CUSTOMER CARE AND SERVICE

Always use original spare parts.
When contacting our Authorised Service Centre, ensure that you have the following data available: Model, PNC, Serial Number.
The information can be found on the rating plate.

⚠ Warning / Caution-Safety information
ⓘ General information and tips
Environmental information

Subject to change without notice.

1. ⚠ SAFETY INFORMATION

Before the installation and use of the appliance, carefully read the supplied instructions. The manufacturer is not responsible for any injuries or damages that are the result of incorrect installation or usage. Always keep the instructions in a safe and accessible location for future reference.

1.1 Children and vulnerable people safety

- This appliance can be used by children aged from 8 years and above and persons with reduced physical, sensory or mental capabilities or lack of experience and knowledge if they have been given supervision or instruction concerning the use of the appliance in a safe way and understand the hazards involved.
- Children between 3 and 8 years of age and persons with very extensive and complex disabilities shall be kept away from the appliance unless continuously supervised.
- Children of less than 3 years of age should be kept away from the appliance unless continuously supervised.
- Do not let children play with the appliance.
- Keep all packaging away from children and dispose of it appropriately.
- Keep children and pets away from the appliance when it operates or when it cools down. Accessible parts are hot.
- If the appliance has a child safety device, it should be activated.
- Children shall not carry out cleaning and user maintenance of the appliance without supervision.

1.2 General Safety

- Only a qualified person must install this appliance and replace the cable.

- WARNING: The appliance and its accessible parts become hot during use. Care should be taken to avoid touching heating elements.
- Always use oven gloves to remove or put in accessories or ovenware.
- Before carrying out any maintenance, disconnect the appliance from the power supply.
- Ensure that the appliance is switched off before replacing the lamp to avoid the possibility of electric shock.
- Do not use a steam cleaner to clean the appliance.
- Do not use harsh abrasive cleaners or sharp metal scrapers to clean the glass door since they can scratch the surface, which may result in shattering of the glass.
- If the mains power supply cable is damaged, it must be replaced by the manufacturer, its Authorised Service Centre or similarly qualified persons to avoid an electrical hazard.
- To remove the shelf supports first pull the front of the shelf support and then the rear end away from the side walls. Install the shelf supports in the opposite sequence.

2. SAFETY INSTRUCTIONS

2.1 Installation

WARNING!
Only a qualified person must install this appliance.

- Remove all the packaging.
- Do not install or use a damaged appliance.
- Follow the installation instructions supplied with the appliance.
- Always take care when moving the appliance as it is heavy. Always use safety gloves and enclosed footwear.
- Do not pull the appliance by the handle.
- Keep the minimum distance from other appliances and units.
- Install the appliance in a safe and suitable place that meets installation requirements.
- The appliance is equipped with an electric cooling system. It must be operated with the electric power supply.

2.2 Electrical connection

WARNING!
Risk of fire and electric shock.

- All electrical connections should be made by a qualified electrician.
- The appliance must be earthed.
- Make sure that the parameters on the rating plate are compatible with the

electrical ratings of the mains power supply.
- Always use a correctly installed shockproof socket.
- Do not use multi-plug adapters and extension cables.
- Make sure not to cause damage to the mains plug and to the mains cable. Should the mains cable need to be replaced, this must be carried out by our Authorised Service Centre.
- Do not let mains cables touch or come near the appliance door or the niche below the appliance, especially when it operates or the door is hot.
- The shock protection of live and insulated parts must be fastened in such a way that it cannot be removed without tools.
- Connect the mains plug to the mains socket only at the end of the installation. Make sure that there is access to the mains plug after the installation.
- If the mains socket is loose, do not connect the mains plug.
- Do not pull the mains cable to disconnect the appliance. Always pull the mains plug.
- Use only correct isolation devices: line protecting cut-outs, fuses (screw type fuses removed from the holder), earth leakage trips and contactors.
- The electrical installation must have an isolation device which lets you disconnect the appliance from the mains at all poles. The isolation device must have a contact opening width of minimum 3 mm.
- This appliance complies with the E.E.C. Directives.

2.3 Use

WARNING!
Risk of injury, burns and electric shock or explosion.

- This appliance is for household use only.
- Do not change the specification of this appliance.
- Make sure that the ventilation openings are not blocked.
- Do not let the appliance stay unattended during operation.
- Deactivate the appliance after each use.
- Be careful when you open the appliance door while the appliance is in operation. Hot air can release.
- Do not operate the appliance with wet hands or when it has contact with water.
- Do not apply pressure on the open door.
- Do not use the appliance as a work surface or as a storage surface.
- Open the appliance door carefully. The use of ingredients with alcohol can cause a mixture of alcohol and air.
- Do not let sparks or open flames to come in contact with the appliance when you open the door.
- Do not put flammable products or items that are wet with flammable products in, near or on the appliance.

WARNING!
Risk of damage to the appliance.

- To prevent damage or discoloration to the enamel:
  - do not put ovenware or other objects in the appliance directly on the bottom.
  - do not put aluminium foil directly on the bottom of cavity of the appliance.
  - do not put water directly into the hot appliance.
  - do not keep moist dishes and food in the appliance after you finish the cooking.
  - be careful when you remove or install the accessories.
- Discoloration of the enamel or stainless steel has no effect on the performance of the appliance.
- Use a deep pan for moist cakes. Fruit juices cause stains that can be permanent.
- This appliance is for cooking purposes only. It must not be used for other purposes, for example room heating.
- Always cook with the oven door closed.
- If the appliance is installed behind a furniture panel (e.g. a door) make

sure the door is never closed when the appliance is in operation. Heat and moisture can build up behind a closed furniture panel and cause subsequent damage to the appliance, the housing unit or the floor. Do not close the furniture panel until the appliance has cooled down completely after use.

2.4 Care and cleaning



WARNING!
Risk of injury, fire, or damage to the appliance.

- Before maintenance, deactivate the appliance and disconnect the mains plug from the mains socket.
- Make sure the appliance is cold. There is the risk that the glass panels can break.
- Replace immediately the door glass panels when they are damaged. Contact the Authorised Service Centre.
- Be careful when you remove the door from the appliance. The door is heavy!
- Clean regularly the appliance to prevent the deterioration of the surface material.
- Clean the appliance with a moist soft cloth. Only use neutral detergents. Do not use any abrasive products, abrasive cleaning pads, solvents or metal objects.
- If you use an oven spray, follow the safety instruction on it's packaging.
- Do not clean the catalytic enamel (if applicable) with any kind of detergent.

2.5 Internal lighting



WARNING!
Risk of electric shock.

- The type of light bulb or halogen lamp used for this appliance is for household appliances only. Do not use it for house lighting.
- Before replacing the lamp, disconnect the appliance from the power supply.
- Only use lamps with the same specifications.

2.6 Service

- To repair the appliance contact an Authorised Service Centre.
- Use original spare parts only.

2.7 Disposal



WARNING!
Risk of injury or suffocation.

- Disconnect the appliance from the mains supply.
- Cut off the mains electrical cable close to the appliance and dispose of it.
- Remove the door catch to prevent children or pets from becoming trapped in the appliance.

3. PRODUCT DESCRIPTION

3.1 General overview

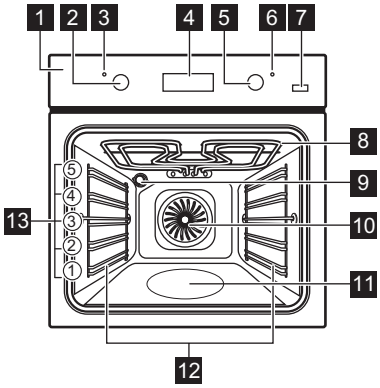

1 Control panel
2 Knob for the heating functions
3 Power lamp / symbol
4 Display
5 Control knob (for the temperature)
6 Temperature indicator / symbol
7 Plus Steam
8 Heating element
9 Lamp
10 Fan
11 Cavity embossment - Aqua cleaning container
12 Shelf support, removable
13 Shelf positions

3.2 Accessories

- **Wire shelf**
  For cookware, cake tins, roasts.
- **Baking tray**
  For cakes and biscuits.
- **Grill- / Roasting pan**
  To bake and roast or as pan to collect fat.

4. CONTROL PANEL

4.1 Buttons

Sensor field / Button	Function	Description
—	MINUS	To set the time.
	CLOCK	To set a clock function.
+	PLUS	To set the time.
	PLUS STEAM	To turn on the True Fan Cooking PLUS function.

4.2 Display

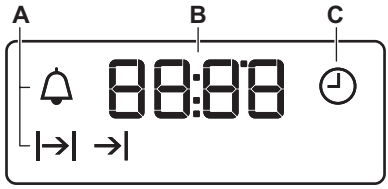

A. Clock functions
B. Timer
C. Clock function

5. BEFORE FIRST USE

WARNING!
Refer to Safety chapters.

To set the Time of day refer to "Clock functions" chapter.

5.1 Initial Cleaning

Remove all accessories and removable shelf supports from the oven.

Refer to "Care and cleaning" chapter.

Clean the oven and the accessories before the first use.
Put the accessories and the removable shelf supports back to their initial position.

5.2 Preheating

Preheat the empty oven before first use.

For function: True Fan Cooking PLUS refer to "Daily use" chapter, Setting the function: True Fan Cooking PLUS".

1. Set the function .Set the maximum temperature.
2. Let the oven operate for 1 hour.
3. Set the function . Set the maximum temperature.
4. Let the oven operate for 15 minutes.
5. Set the function , press: Plus Steam . Set the maximum temperature.
6. Let the oven operate for 15 minutes.
7. Turn off the oven and let it cool down.

Accessories can become hotter than usual. The oven can emit an odour and smoke. Make sure that the airflow in the room is sufficient.

6. DAILY USE

WARNING!
Refer to Safety chapters.

6.1 Retractable knobs

To use the appliance press the knob. The knob comes out.

6.2 Setting a heating function

1. Turn the knob for the heating functions to select a heating function.
2. Turn the control knob to select the temperature.

The lamp turns on when the oven operates.

3. To turn off the oven, turn the knob for the heating functions to the off position.

6.3 Heating functions

Oven function	Application
0 Off position	The oven is off.
 Light	To turn on the lamp without a cooking function.
 True Fan Cooking / True Fan Cooking PLUS / Aqua Clean	To bake on up to three shelf positions at the same time and to dry food. Set the temperature 20 - 40 °C lower than for Conventional Cooking. / To add humidity during the cooking. To get the right colour and crispy crust during baking. To give more juiciness during reheating. Refer to "Care and cleaning" chapter for more information about: Aqua Clean.

Oven function	Application
 Moist Fan Baking	This function is designed to save energy during cooking. For the cooking instructions refer to "Hints and tips" chapter, Moist Fan Baking. The oven door should be closed during cooking so that the function is not interrupted and to ensure that the oven operates with the highest energy efficiency possible. When you use this function, the temperature in the cavity may differ from the set temperature. The heating power may be reduced. For general energy saving recommendations refer to "Energy Efficiency" chapter, Energy Saving.This function was used to comply with the energy efficiency class according to EN 60350-1.
 Bottom Heat	To bake cakes with crispy bottom and to preserve food.
 Defrost	To defrost food (vegetables and fruit). The defrosting time depends on the amount and size of the frozen food.
 Fast Grilling	To grill flat food in large quantities and to toast bread.
 Turbo Grilling	To roast larger meat joints or poultry with bones on one shelf position. To make gratins and to brown.

Oven function	Application
Pizza Setting	To bake pizza. To make intensive browning and a crispy bottom.
Conventional Cooking (Top / Bottom Heat)	To bake and roast food on one shelf position.

6.4 Setting the function: True Fan Cooking PLUS

This function increases humidity during cooking.

WARNING!
Risk of burns and damage to the appliance.

Released humidity can cause burns. After the function stops, carefully open the door.

1. Fill the cavity embossment with tap water.



The maximum capacity of the cavity embossment is 250 ml.
Fill the cavity embossment with water only when the oven is cold.

CAUTION!
Do not refill the cavity embossment during cooking or when the oven is hot.

2. Set the function: .
3. Press: Plus Steam .

It works only with the function: True Fan Cooking PLUS.
The indicator turns on.

4. Turn the control knob to set temperature.
5. Preheat the empty oven for 10 minutes to create humidity.
6. Put food in the oven.

Refer to "Hints and tips" chapter.
Do not open the oven door during cooking.

7. Turn the knob for the heating functions to the off position, press Plus Steam to turn off the oven.

The indicator turns off.

8. Remove water from the cavity embossment.

WARNING!
Make sure that the oven is cold before you remove the remaining water from the cavity embossment.

7. CLOCK FUNCTIONS

7.1 Clock functions table

Clock function		Application
🕘	TIME OF DAY	To set, change or check the time of day.
|→|	DURATION	To set how long the appliance operates.
→|	END	To set when the appliance deactivates.
|→|→|	TIME DELAY	To combine DURATION and END function.
🔔	MINUTE MINDER	To set countdown time. This function has no effect on the operation of the appliance. You can set the MINUTE MINDER at any time, also when the appliance is off.

7.2 Setting the time. Changing the time

You must set the time before you operate the oven.

The 🕘 flashes when you connect the appliance to the electrical supply, when there was a power cut or when the timer is not set.

Press the + or − to set the correct time.
After approximately five seconds, the flashing stops and the display shows the time of day you set.

To change the time of day press ⏲ again and again until 🕘 starts to flash.

7.3 Setting the DURATION

1. Set an oven function and temperature.
2. Press ⏲ again and again until |→| starts to flash.
3. Press + or − to set the DURATION time.

The display shows |→|.

4. When the time ends, |→| flashes and an acoustic signal sounds. The appliance deactivates automatically.
5. Press any button to stop the acoustic signal.
6. Turn the knob for the oven functions and the knob for the temperature to the off position.

7.4 Setting the END

1. Set an oven function and temperature.
2. Press ⏲ again and again until →| starts to flash.
3. Press + or − to set the time.

The display shows →|.

4. When the time ends, →| flashes and an acoustic signal sounds. The appliance deactivates automatically.
5. Press any button to stop the signal.
6. Turn the knob for the oven functions and the knob for the temperature to the off position.

7.5 Setting the TIME DELAY

1. Set an oven function and temperature.
2. Press ⏲ again and again until |→| starts to flash.
3. Press + or − to set the time for DURATION.
4. Press ⏲.
5. Press + or − to set the time for END.
6. Press ⏲ to confirm.

Appliance turns on automatically later on, works for the set DURATION time and stops at the set END time. At the set time an acoustic signal sounds.

7. The appliance deactivates automatically. Press any button to stop the signal.
8. Turn the knob for the oven functions and the knob for the temperature to the off position.

7.6 Setting the MINUTE MINDER

1. Press ⏲ again and again until 🔔 starts to flash.
2. Press + or — to set the necessary time.

The Minute Minder starts automatically after 5 seconds.

3. When the set time ends, an acoustic signal sounds. Press any button to stop the acoustic signal.
4. Turn the knob for the oven functions and the knob for the temperature to the off position.

7.7 Cancelling the clock functions

1. Press the ⏲ again and again until the necessary function indicator starts to flash.
2. Press and hold —.

The clock function goes out after some seconds.

8. USING THE ACCESSORIES

⚠ **WARNING!**
Refer to Safety chapters.

8.1 Inserting the accessories

Wire shelf:

Push the shelf between the guide bars of the shelf support and make sure that the feet point down.

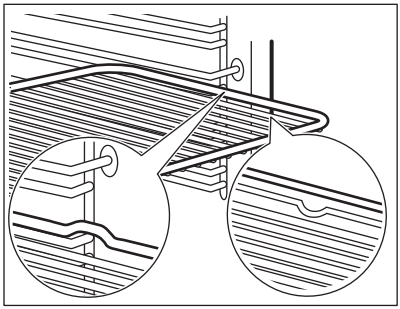

Baking tray/ Deep pan:

Push the baking tray / deep pan between the guide bars of the shelf support.

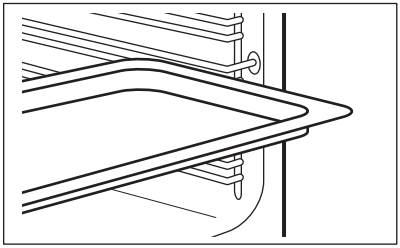

Wire shelf and baking tray / deep pan together:

Push the baking tray / deep pan between the guide bars of the shelf support and the wire shelf on the guide bars above.

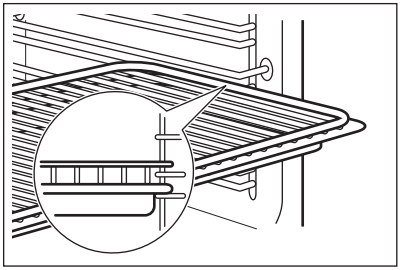

Small indentation at the top increase safety. The indentations are also anti-tip devices. The high rim around the shelf prevents cookware from slipping of the shelf.

9. ADDITIONAL FUNCTIONS

9.1 Cooling fan

When the oven operates, the cooling fan turns on automatically to keep the surfaces of the oven cool. If you turn off the oven, the cooling fan can continues to operate until the oven cools down.

9.2 Safety thermostat

Incorrect operation of the oven or defective components can cause dangerous overheating. To prevent this, the oven has a safety thermostat which interrupts the power supply. The oven turns on again automatically when the temperature drops.

10. HINTS AND TIPS

WARNING!
Refer to Safety chapters.

The temperature and baking times in the tables are guidelines only. They depend on the recipes and the quality and quantity of the ingredients used.

10.1 Cooking recommendations

The oven has five shelf positions.

Count the shelf positions from the bottom of the oven floor.

Your oven may bake or roast differently to the oven you had before. The below tables provide you with the standard settings for temperature, cooking time and shelf position.

If you cannot find the settings for a special recipe, look for the similar one.

The oven has a special system which circulates the air and constantly recycles the steam. With this system you can cook in a steamy environment and keep the food soft inside and crusty outside. It decreases the cooking time and energy consumption.

Baking cakes
Do not open the oven door before 3/4 of the set cooking time is up.

If you use two baking trays at the same time, keep one empty level between them.

Cooking meat and fish
Use a deep pan for very fatty food to prevent the oven from stains that can be permanent.

Leave the meat for approximately 15 minutes before carving so that the juice does not seep out.

To prevent too much smoke in the oven during roasting, add some water into the deep pan. To prevent the smoke condensation, add water each time after it dries up.

Cooking times
Cooking times depend on the type of food, its consistency, and volume.

Initially, monitor the performance when you cook. Find the best settings (heat setting, cooking time, etc.) for your

cookware, recipes and quantities when you use this appliance.

10.2 True Fan Cooking PLUS

Use the second shelf position.

Use a baking tray.

CAKES / PASTRIES / BREADS

	(ml)	(°C)	(min)
Cookies / Scones / Croissants	100	150 - 180	10 - 20
Focaccia	100	200 - 210	10 - 20
Pizza	100	230	10 - 20
Bread rolls	100	200	20 - 25
Bread	100	180	35 - 40
Plum cake / Apple pie / Cinnamon rolls, baked in a cake mould	100 - 150	160 - 180	30 - 60

Use 150 ml of water unless specified otherwise.

FROZEN READY MEALS

	(°C)	(min)
Pizza	200 - 210	10 - 20
Croissants	170 - 180	15 - 25
Lasagne, use 200 ml	180 - 200	35 - 50

Use 100 ml of water.

Set the temperature to 110 °C.

FOOD REGENERATION

	(min)
Bread rolls	10 - 20
Bread	15 - 25

FOOD REGENERATION

	(min)
Focaccia	15 - 25
Meat	15 - 25
Pasta	15 - 25
Pizza	15 - 25
Rice	15 - 25
Vegetables	15 - 25

Use 200 ml of water.

Use a glass baking dish.

ROASTING

	(°C)	(min)
Roast beef	200	50 - 60

ROASTING		
	(°C)	(min)
Chicken	210	60 - 80

ROASTING		
	(°C)	(min)
Roast pork	180	65 - 80

10.3 Baking and roasting

CAKES						
	Conventional Cooking		True Fan Cooking		(min)	
	(°C)		(°C)			
Whisked recipes	170	2	160	3 (2 and 4)	45 - 60	Cake mould
Shortbread dough	170	2	160	3 (2 and 4)	20 - 30	Cake mould
Buttermilk cheesecake	170	1	165	2	80 - 100	Cake mould, Ø 26 cm
Strudel	175	3	150	2	60 - 80	Baking tray
Jam tart	170	2	165	2	30 - 40	Cake mould, Ø 26 cm
Christmas cake, preheat the empty oven	160	2	150	2	90 - 120	Cake mould, Ø 20 cm
Plum cake, preheat the empty oven	175	1	160	2	50 - 60	Bread tin
Muffins	170	3	140 - 150	3	20 - 30	Baking tray
Muffins, two levels	-	-	140 - 150	2 and 4	25 - 35	Baking tray
Muffins, three levels	-	-	140 - 150	1, 3 and 5	30 - 45	Baking tray
Biscuits	140	3	140 - 150	3	30 - 35	Baking tray
Biscuits, two levels	-	-	140 - 150	2 and 4	35 - 40	Baking tray

CAKES

	Conventional Cooking		True Fan Cooking		(min)	
	(°C)		(°C)			
Biscuits, three levels	-	-	140 - 150	1, 3 and 5	35 - 45	Baking tray
Meringues	120	3	120	3	80 - 100	Baking tray
Meringues, two levels, preheat the empty oven	-	-	120	2 and 4	80 - 100	Baking tray
Buns, preheat the empty oven	190	3	190	3	12 - 20	Baking tray
Eclairs	190	3	170	3	25 - 35	Baking tray
Eclairs, two levels	-	-	170	2 and 4	35 - 45	Baking tray
Plate tarts	180	2	170	2	45 - 70	Cake mould, Ø 20 cm
Rich fruit cake	160	1	150	2	110 - 120	Cake mould, Ø 24 cm

Preheat the empty oven.

BREAD AND PIZZA

	Conventional Cooking		True Fan Cooking		(min)	
	(°C)		(°C)			
White bread, 1 - 2 pieces, 0.5 kg each	190	1	190	1	60 - 70	-
Rye bread, pre-heating is not needed	190	1	180	1	30 - 45	Bread tin

BREAD AND PIZZA

	Conventional Cooking		True Fan Cooking		(min)	
	(°C)		(°C)			
Bread rolls, 6 - 8 rolls	190	2	180	2 (2 and 4)	25 - 40	Baking tray
Pizza	230 - 250	1	230 - 250	1	10 - 20	Enamelled tray
Scones	200	3	190	3	10 - 20	Baking tray

Preheat the empty oven.

Use the cake mould.

FLANS

	Conventional Cooking		True Fan Cooking		(min)
	(°C)		(°C)		
Pasta flan, preheating is not needed	200	2	180	2	40 - 50
Vegetable flan, preheating is not needed	200	2	175	2	45 - 60
Quiches	180	1	180	1	50 - 60
Lasagne	180 - 190	2	180 - 190	2	25 - 40
Cannelloni	180 - 190	2	180 - 190	2	25 - 40

Use the second shelf position.

Use the wire shelf.

MEAT

	Conventional Cooking	True Fan Cooking	(min)
	(°C)	(°C)	
Beef	200	190	50 - 70
Pork	180	180	90 - 120
Veal	190	175	90 - 120
English roast beef, rare	210	200	50 - 60
English roast beef, medium	210	200	60 - 70
English roast beef, well done	210	200	70 - 75

MEAT

	Conventional Cooking		True Fan Cooking		(min)
	(°C)		(°C)		
Pork shoulder, with rind	180	2	170	2	120 - 150
Pork shin, 2 pieces	180	2	160	2	100 - 120
Leg of lamb	190	2	175	2	110 - 130
Whole chicken	220	2	200	2	70 - 85
Whole turkey	180	2	160	2	210 - 240
Whole duck	175	2	220	2	120 - 150
Whole goose	175	2	160	1	150 - 200
Rabbit, cut in pieces	190	2	175	2	60 - 80
Hare, cut in pieces	190	2	175	2	150 - 200
Whole pheasant	190	2	175	2	90 - 120

Use the second shelf position.

FISH			
	Conventional Cooking (°C)	True Fan Cooking (°C)	(min)
Trout / Sea bream, 3 - 4 fish	190	175	40 - 55
Tuna / Salmon, 4 - 6 fillets	190	175	35 - 60

10.4 Grilling

Preheat the empty oven.

Use the fourth shelf position.

Grill with the maximum temperature setting.

GRILL			
	(kg)	(min) 1st side	(min) 2nd side
Fillet steaks, 4 pieces	0.8	12 - 15	12 - 14
Beef steak, 4 pieces	0.6	10 - 12	6 - 8
Sausages, 8	-	12 - 15	10 - 12
Pork chops, 4 pieces	0.6	12 - 16	12 - 14
Chicken, half, 2	1	30 - 35	25 - 30
Kebabs, 4	-	10 - 15	10 - 12
Chicken breast, 4 pieces	0.4	12 - 15	12 - 14
Burgers, 6	0.6	20 - 30	-
Fish fillet, 4 pieces	0.4	12 - 14	10 - 12
Toasted sandwiches, 4 - 6	-	5 - 7	-
Toast, 4 - 6	-	2 - 4	2 - 3

10.5 Turbo Grilling

Preheat the empty oven.

Use the first or the second shelf position.

To calculate the roasting time multiple the time given in the table below by the centimetres of thickness of the fillet.

BEEF

	(°C)	(min)
Roast beef or fillet, rare	190 - 200	5 - 6
Roast beef or fillet, medium	180 - 190	6 - 8
Roast beef or fillet, well done	170 - 180	8 - 10

PORK

	(°C)	(min)
Shoulder / Neck / Ham joint, 1 - 1.5 kg	160 - 180	90 - 120
Chops / Spare rib, 1 - 1.5 kg	170 - 180	60 - 90
Meatloaf, 0.75 - 1 kg	160 - 170	50 - 60
Pork knuckle, precooked, 0.75 - 1 kg	150 - 170	90 - 120

VEAL

	(°C)	(min)
Roast veal, 1 kg	160 - 180	90 - 120
Veal knuckle, 1.5 - 2 kg	160 - 180	120 - 150

LAMB

	(°C)	(min)
Lamb leg / Roast lamb, 1 - 1.5 kg	150 - 170	100 - 120
Lamb saddle, 1 - 1.5 kg	160 - 180	40 - 60

POULTRY

	(°C)	(min)
Poultry, portions, 0.2 - 0.25 kg each	200 - 220	30 - 50
Chicken, half, 0.4 - 0.5 kg each	190 - 210	35 - 50
Chicken, poulard, 1 - 1.5 kg	190 - 210	50 - 70
Duck, 1.5 - 2 kg	180 - 200	80 - 100
Goose, 3.5 - 5 kg	160 - 180	120 - 180
Turkey, 2.5 - 3.5 kg	160 - 180	120 - 150
Turkey, 4 - 6 kg	140 - 160	150 - 240

FISH (STEAMED)

	(°C)	(min)
Whole fish, 1 - 1.5 kg	210 - 220	40 - 60

10.6 Defrost

	(kg)	Defrosting time (min)	Further defrosting time (min)	
Chicken	1	100 - 140	20 - 30	Place chicken on an upturned saucer placed on a large plate. Turn halfway through.
Meat	1	100 - 140	20 - 30	Turn halfway through.
	0.5	90 - 120		
Cream	2 x 0.2	80 - 100	10 - 15	Cream can also be whipped when still slightly frozen in places.
Trout	0.15	25 - 35	10 - 15	-
Strawberries	0.3	30 - 40	10 - 20	-
Butter	0.25	30 - 40	10 - 15	-
Gateau	1.4	60	60	-

10.7 Drying - True Fan Cooking

Cover trays with grease proof paper or baking parchment.

For a better result, stop the oven halfway through the drying time, open the door and let it cool down for one night to complete the drying.

For 1 tray use the third shelf position.

For 2 trays use the first and fourth shelf position.

VEGETABLES

	(°C)	(h)
Beans	60 - 70	6 - 8
Peppers	60 - 70	5 - 6
Vegetables for soup	60 - 70	5 - 6

VEGETABLES

	(°C)	(h)
Mushrooms	50 - 60	6 - 8
Herbs	40 - 50	2 - 3

Set the temperature to 60 - 70 °C.

FRUIT

	(h)
Plums	8 - 10
Apricots	8 - 10
Apple slices	6 - 8

FRUIT	
	(h)
Pears	6 - 9

10.8 Moist Fan Baking - recommended accessories

Use the dark and non-reflective tins and containers. They have better heat absorption than the light colour and reflective dishes.

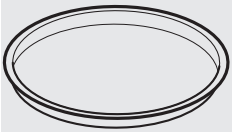 Pizza pan	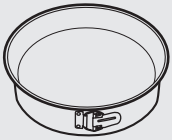 Baking dish	 Ramekins	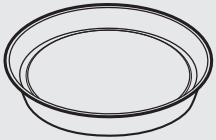 Flan base tin
Dark, non-reflective 28 cm diameter	Dark, non-reflective 26 cm diameter	Ceramic 8 cm diameter, 5 cm height	Dark, non-reflective 28 cm diameter

10.9 Moist Fan Baking

For the best results follow suggestions listed in the table below.

		(°C)		(min)
Sweet rolls, 12 pieces	baking tray or dripping pan	175	3	40 - 50
Rolls, 9 pieces	baking tray or dripping pan	180	2	35 - 45
Pizza, frozen, 0.35 kg	wire shelf	180	2	45 - 55
Swiss roll	baking tray or dripping pan	170	2	30 - 40
Brownie	baking tray or dripping pan	170	2	45 - 50
Soufflè, 6 pieces	ceramic ramekins on wire shelf	190	3	45 - 55
Sponge flan base	flan base tin on wire shelf	180	2	35 - 45

		(°C)		(min)
Victoria sandwich	baking dish on wire shelf	170	2	35 - 50
Poached fish, 0.3 kg	baking tray or dripping pan	180	2	35 - 45
Whole fish, 0.2 kg	baking tray or dripping pan	180	3	25 - 35
Fish fillet, 0.3 kg	pizza pan on wire shelf	170	3	30 - 40
Poached meat, 0.25 kg	baking tray or dripping pan	180	3	35 - 45
Shashlik, 0.5 kg	baking tray or dripping pan	180	3	40 - 50
Cookies, 16 pieces	baking tray or dripping pan	150	2	30 - 45
Macaroons, 20 pieces	baking tray or dripping pan	180	2	45 - 55
Muffins, 12 pieces	baking tray or dripping pan	170	2	30 - 40
Savory pastry, 16 pieces	baking tray or dripping pan	170	2	35 - 45
Short crust biscuits, 20 pieces	baking tray or dripping pan	150	2	40 - 50
Tartlets, 8 pieces	baking tray or dripping pan	170	2	30 - 40
Vegetables, poached, 0.4 kg	baking tray or dripping pan	180	2	35 - 45
Vegetarian omelette	pizza pan on wire shelf	180	3	35 - 45
Mediterranean vegetables, 0.7 kg	baking tray or dripping pan	180	4	35 - 45

10.10 Information for test institutes

Tests according to IEC 60350-1.

				 (°C)	 (min)	
Small cakes, 20 per tray	Conventional Cooking	Baking tray	3	170	20 - 30	-
Small cakes, 20 per tray	True Fan Cooking	Baking tray	3	150 - 160	20 - 35	-
Small cakes, 20 per tray	True Fan Cooking	Baking tray	2 and 4	150 - 160	20 - 35	-
Apple pie, 2 tins Ø20 cm	Conventional Cooking	Wire shelf	2	180	70 - 90	-
Apple pie, 2 tins Ø20 cm	True Fan Cooking	Wire shelf	2	160	70 - 90	-
Sponge cake, cake mould Ø26 cm	Conventional Cooking	Wire shelf	2	170	40 - 50	Preheat the oven for 10 minutes.
Sponge cake, cake mould Ø26 cm	True Fan Cooking	Wire shelf	2	160	40 - 50	Preheat the oven for 10 minutes.
Sponge cake, cake mould Ø26 cm	True Fan Cooking	Wire shelf	2 and 4	160	40 - 60	Preheat the oven for 10 minutes.
Short bread	True Fan Cooking	Baking tray	3	140 - 150	20 - 40	-
Short bread	True Fan Cooking	Baking tray	2 and 4	140 - 150	25 - 45	-
Short bread	Conventional Cooking	Baking tray	3	140 - 150	25 - 45	-

				(°C)	(min)	
Toast, 4 - 6 pieces	Grilling	Wire shelf	4	max.	2 - 3 minutes first side; 2 - 3 minutes second side	Preheat the oven for 3 minutes.
Beef burger, 6 pieces, 0.6 kg	Grilling	Wire shelf and dripping pan	4	max.	20 - 30	Put the wire shelf on the fourth level and the dripping pan on the third level of the oven. Turn the food halfway through the cooking time. Preheat the oven for 3 minutes.

11. CARE AND CLEANING

WARNING!
Refer to Safety chapters.

11.1 Notes on cleaning

Clean the front of the oven with a soft cloth with warm water and a mild cleaning agent.

To clean metal surfaces, use a dedicated cleaning agent.

Clean the oven interior after each use. Fat accumulation or other food remains may result in a fire. The risk is higher for the grill pan.

Clean all accessories after each use and let them dry. Use a soft cloth with warm water and a cleaning agent. Do not clean the accessories in the dishwasher.

Clean stubborn stains with a special oven cleaner.

If you have nonstick accessories, do not clean them using aggressive agents, sharp-edged objects or a dishwasher. It can cause damage to the nonstick coating.

Moisture can condense in the oven or on the door glass panels. To decrease the condensation, operate the oven for 10 minutes before cooking. Clean the moisture from the cavity after each use.

11.2 Stainless steel or aluminium ovens

Clean the oven door with a damp cloth or sponge only. Dry it with a soft cloth.

Do not use steel wool, acids or abrasive materials as they can damage the oven surface. Clean the oven control panel with the same precautions.

11.3 Cleaning the cavity embossment

The cleaning procedure removes limestone residue from the cavity embossment after cooking with steam.

For the function: True Fan Cooking PLUS we recommend to do the cleaning procedure at least every 5 - 10 cooking cycles.

1. Put 250 ml of white vinegar into the cavity embossment at the bottom of the oven.

Use maximum 6% vinegar without any additives.

2. Let the vinegar dissolve the residual limestone at the ambient temperature for 30 minutes.
3. Clean the cavity with warm water and a soft cloth.

11.4 Cleaning the door gasket

Regularly do a check of the door gasket. The door gasket is around the frame of the oven cavity. Do not use the oven if the door gasket is damaged. Contact an Authorised Service Centre.

To clean the door gasket, refer to the general information about cleaning.

11.5 Removing the shelf supports

To clean the oven, remove the shelf supports.

CAUTION!
Be careful when you remove the shelf supports.

1. Pull the front of the shelf support away from the side wall.

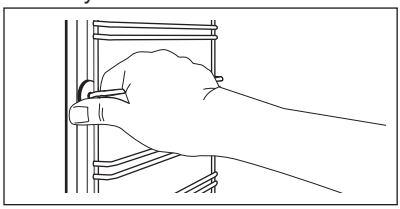

2. Pull the rear end of the shelf support away from the side wall and remove it.

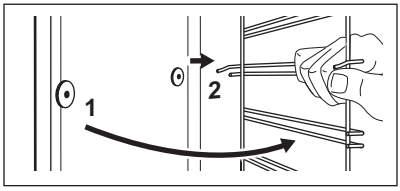

Install the removed accessories in the opposite sequence.

11.6 Aqua Clean

This cleaning procedure uses humidity to help remove remaining fat and food particles from the oven.

1. Put 200 ml of water into the cavity embossment at the bottom of the oven.
2. Set the function: and press .
3. Set the temperature to 90 °C.
4. Let the oven operate for 30 minutes.
5. Turn off the oven and let it cool down.
6. When the oven is cool, clean it with a soft cloth.

WARNING!
Make sure that the oven is cool before you touch it. There is a risk of burns.

11.7 Removing and installing door

The oven door has two glass panels. You can remove the oven door and the internal glass panel to clean it. Read the whole "Removing and installing door" instruction before you remove the glass panels.

The oven door may close if you try to remove the internal glass panel before you remove the oven door.

CAUTION!
Do not use the oven without the internal glass panel.

1. Open the door fully and hold both hinges.

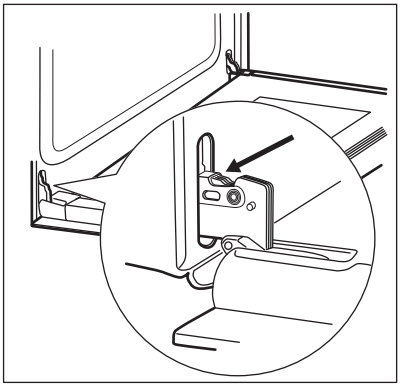

2. Lift and turn the levers fully on both hinges.

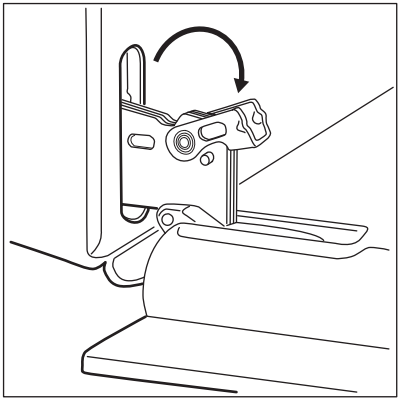

3. Close the oven door halfway to the first opening position. Then lift and pull forward and remove the door from its seat.

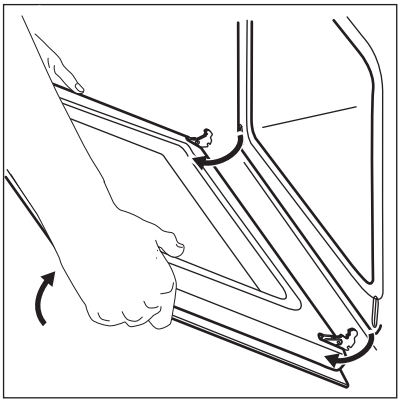

4. Put the door on a soft cloth on a stable surface.

5. Hold the door trim (B) on the top edge of the door at the two sides and push inwards to release the clip seal.

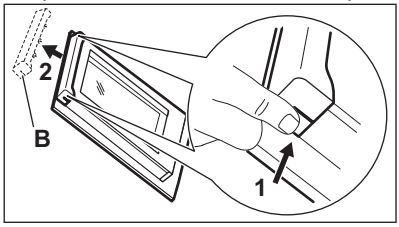

6. Pull the door trim to the front to remove it.
7. Hold the door glass panel by its top edge and carefully pull it out. Make sure the glass slides out of the supports completely.

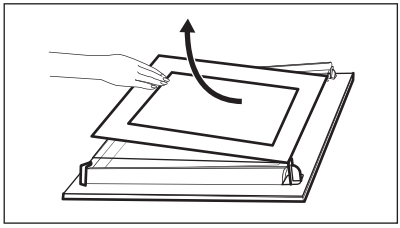

8. Clean the glass panels with water and soap. Dry the glass panels carefully. Do not clean the glass panels in the dishwasher.

When the cleaning is completed, install the glass panel and the oven door.

The screen-printing zone must face the inner side of the door. Make sure that after the installation the surface of the glass panel frame on the screen-printing zones is not rough when you touch it.

When installed correctly the door trim clicks.

Make sure that you install the internal glass panel in the seats correctly.

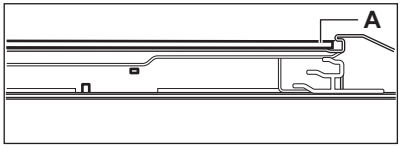

11.8 Replacing the lamp

WARNING!
Risk of electric shock.
The lamp can be hot.

1. Turn off the oven.

Wait until the oven is cooled down.

2. Disconnect the oven from the mains.
3. Put a cloth on the bottom of the cavity.

CAUTION!
Always hold the halogen lamp with a cloth to prevent grease residue from burning on the lamp.

The back lamp

1. Turn the lamp glass cover to remove it.
2. Clean the glass cover.
3. Replace the lamp with a suitable 300 °C heat-resistant lamp.
4. Install the glass cover.

12. TROUBLESHOOTING

WARNING!
Refer to Safety chapters.

12.1 What to do if...

Problem	Possible cause	Remedy
The oven does not heat up.	The oven is deactivated.	Activate the oven.
The oven does not heat up.	The clock is not set.	Set the clock.
The oven does not heat up.	The necessary settings are not set.	Make sure that the settings are correct.
The oven does not heat up.	The fuse is blown.	Make sure that the fuse is the cause of the malfunction. If the fuse is blown again and again, contact a qualified electrician.
The lamp does not operate.	The lamp is defective.	Replace the lamp.
Steam and condensation settle on the food and in the cavity of the oven.	You left the dish in the oven for too long.	Do not leave the dishes in the oven for longer than 15 - 20 minutes after the cooking process ends.
There is no good cooking performance using the function: True Fan Cooking PLUS.	You did not turn on correctly the function: True Fan Cooking PLUSwith the Plus Steam.	Refer to "Activating the function: True Fan Cooking PLUS".

Problem	Possible cause	Remedy
There is no good cooking performance using the function: True Fan Cooking PLUS.	You did not fill the cavity embossment with water.	Refer to "Activating the function: True Fan Cooking PLUS".
You want to activate the True Fan Cooking PLUS function, but the Plus Steam indicator does not switch on.	You did not select the heating function that support Plus Steam.	Refer to "Activating the function: True Fan Cooking PLUS".
You want to activate the True Fan Cooking PLUS function, but the Plus Steam indicator does not switch on.	The Plus Steam does not work.	Deactivate the appliance with the house fuse or the safety switch in the fuse box and activate it again. Refer to "Activating the function: True Fan Cooking PLUS".
The water in the cavity embossment does not boil.	The temperature is too low.	Set the temperature at least to 110 °C. Refer to "Hints and tips" chapter.
The water comes out of the cavity embossment.	There is too much water in the cavity embossment.	Deactivate the oven and make sure that the appliance is cold. Wipe the water with a cloth or sponge. Add the correct amount of water to the cavity embossment. Refer to the specific procedure.
The display shows "12.00".	There was a power cut.	Reset the clock.

12.2 Service data

If you cannot find a solution to the problem yourself, contact your dealer or an Authorised Service Centre.

The necessary data for the service centre is on the rating plate. The rating plate is on the front frame of the oven cavity. Do not remove the rating plate from the oven cavity.

We recommend that you write the data here:	
Model (MOD.)	.....
Product number (PNC)	.....
Serial number (S.N.)	.....

13. INSTALLATION

WARNING!
Refer to Safety chapters.

13.1 Building In

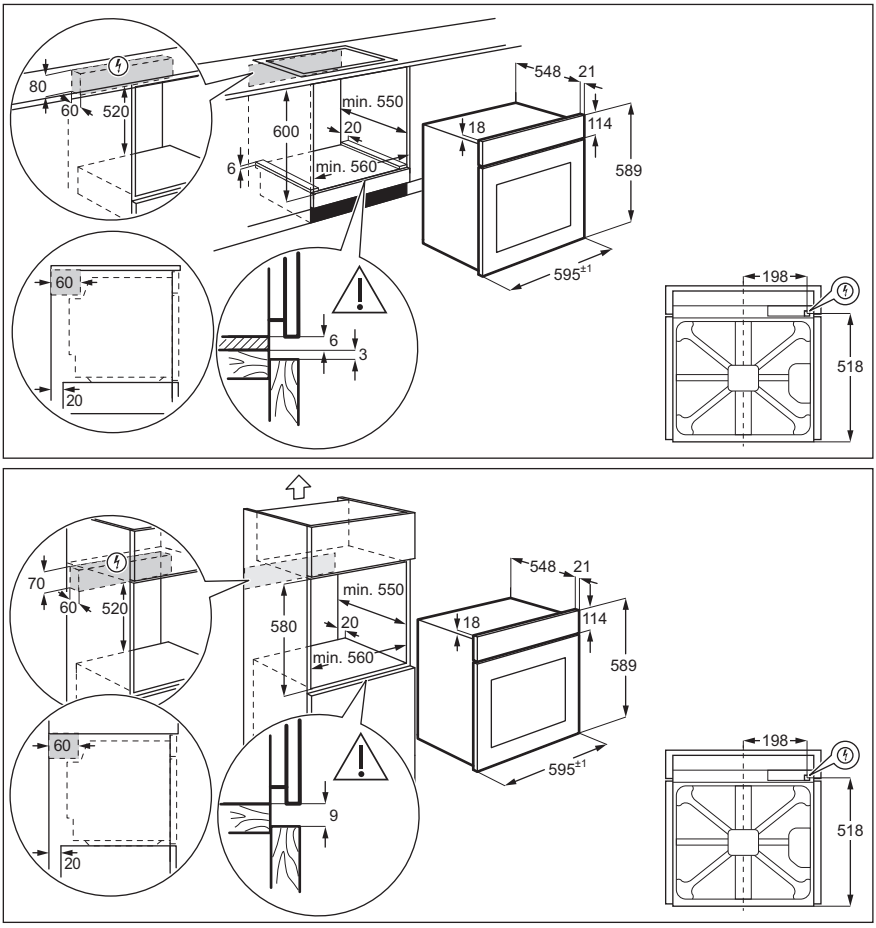

13.2 Securing the appliance to the cabinet

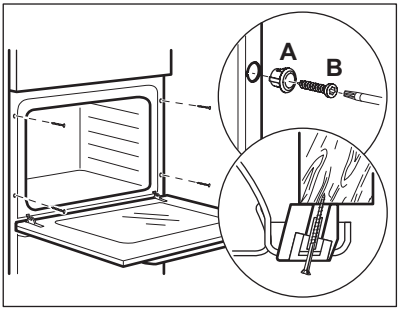

13.3 Electrical installation

The manufacturer is not responsible if you do not follow the safety precautions from the Safety chapters.

This appliance is supplied with a main plug and a main cable.

13.4 Cable

Cable types applicable for installation or replacement:

H07 RN-F, H05 RN-F, H05 RRF, H05 VV-F, H05 V2V2-F (T90), H05 BB-F

For the section of the cable refer to the total power on the rating plate. You can also refer to the table:

Total power (W)	Section of the cable (mm^2)
maximum 1380	3 x 0.75
maximum 2300	3 x 1
maximum 3680	3 x 1.5

The earth cord (green / yellow cable) must be 2 cm longer than phase and neutral cables (blue and brown cables).

14. ENERGY EFFICIENCY

14.1 Product Information Sheet

Product information according to EU 65-66/2014

Supplier's name	Electrolux
Model identification	EOD5H40X 949499040
Energy Efficiency Index	95.3
Energy efficiency class	A
Energy consumption with a standard load, conventional mode	0.93 kWh/cycle
Energy consumption with a standard load, fanforced mode	0.81 kWh/cycle
Number of cavities	1
Heat source	Electricity
Volume	72 l
Type of oven	Built-In Oven
Mass	28.4 kg

EN 60350-1 - Household electric cooking appliances - Part 1: Ranges, ovens, steam ovens and grills - Methods for measuring performance.

14.2 Energy saving



The oven contains features which help you save energy during everyday cooking.

Make sure that the oven door is closed properly when the oven operates. Do not open the door too often during cooking. Keep the door gasket clean and make sure it is well fixed in its position.

Use metal cookware to improve energy saving.

When possible, do not preheat the oven before cooking.

Keep breaks between baking as short as possible when you prepare a few dishes at one time.

Cooking with fan
When possible, use the cooking functions with fan to save energy.

Residual heat
When the cooking duration is longer than 30 minutes, reduce the oven temperature to minimum 3 - 10 minutes before the end of cooking. The residual heat inside the oven will continue to cook.

Use the residual heat to warm up other dishes.

Keep food warm
Choose the lowest possible temperature setting to use residual heat and keep a meal warm.

Moist Fan Baking
Function designed to save energy during cooking.

15. ENVIRONMENTAL CONCERNS

Recycle materials with the symbol ♺. Put the packaging in relevant containers to recycle it. Help protect the environment and human health by recycling waste of electrical and electronic appliances. Do not dispose of appliances marked with the symbol with the household waste. Return the product to your local recycling facility or contact your municipal office.

www.electrolux.com/shop



867348783-C-112019

CE