WDO 93F B K

12NC: 859991532660

GTIN (EAN) code: 8003437209512

SENSING THE DIFFERENCE



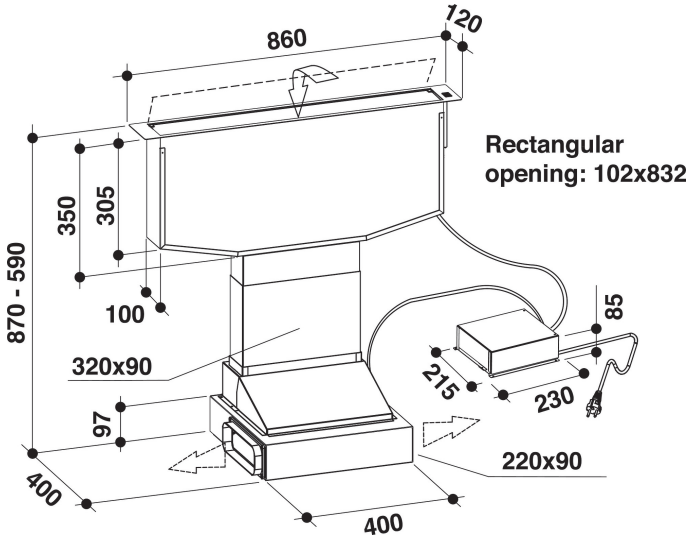

- Maximum noise level 68 dBA
- Noise Level (min. - max.): 54-68 dBA
- Air Flow (min. - max.): 304, 496, booster 603 m3/h
- Maximum extraction rate: 496 (m3/h)
- Energy class B
- Speeds: 3 + Booster
- 1 x 110 W motor
- Electronic Touch control
- 2 Washable aluminium filters
- Grease Filtering Efficiency Class: C
- Fluid Dynamic Efficiency Class: B
- Filter Saturation Indicator
- Operating Mode: Air extraction, Recirculating air
- Black Finishing
- 1 Motor
- Motor Power: 110 W
- 90 cm Downdraft hood

Whirlpool cooker hood - WDO 93F B K

This Whirlpool Cooker Hood features: black color. Dishwasher-safe, washable aluminium grease filters. An outstanding cooker extractor fan, ensuring a fresh, grease-free cooking environment. Between 60cm and 90cm wide appliance. New design ensuring extra silent performance.

Electronic control
Effortless control. This Whirlpool Hood includes an intuitive electronic user interface, designed to provide you with the simplest, most satisfying user experience ever.

Flexible Installation
Flexible installation options. This Whirlpool Hood can be operated in either Ducted or Recirculated mode (filter needed), so you can enjoy complete freedom when designing your kitchen.

Grease Filter
Odour-free cooking. This Whirlpool Hood features an efficient grease filter, that protects your kitchen surfaces and ensures pleasant, odour-free cooking.

3 Speeds
Versatile performance. This Whirlpool Hood offers 3 speed options, giving you complete control over the extraction rate.

WCollection aesthetic
A Masterpiece of Design. Whirlpool understands the importance of craftsmanship and carefully honed details. The timeless design of the W Collection complements any style of kitchen, while the matching appliances blend seamlessly with each other to create a sublimely eye-catching coordinated look. Even the gleaming finishes are engineered for easy cleaning, so fingerprints and smudges become a thing of the past. From the platinum chromed logo to the tinted glass and sophisticated edge-to-edge metal band, every detail has been designed to delight and enhance the overall Whirlpool experience.

Total annual energy consumption
Ideal performance, outstanding savings. Whirlpool Hoods are designed to provide exceptional results, while reducing energy costs.

Touch control user interface
Intuitive controls. The stylish touch-control user interface provides simple, immediate access to all of your hood's settings and functions.

Booster
Odour-free cooking. This Whirlpool Hood features an extraction booster, that ensures ideal air filtration and odour and grease aspiration.

WDO 93F B K

12NC: 859991532660

GTIN (EAN) code: 8003437209512

Whirlpool
SENSING THE DIFFERENCE

MAIN FEATURES

Product group	Hood
Colour body	Black
Material body	Stainless steel
Colour chimney	N/A
Material chimney	N/A
Typology	Downdraft
Installation type	Table top
Type of control	Electronic
Type of control settings	Touch-control
Decor panel options	Not possible
Motor location	Integrated motor in hood body
Operating Mode	Convertible
Electrical connection rating (W)	110
Current (A)	0,5
Voltage (V)	220-240
Frequency (Hz)	50
Length of Electrical Supply Cord (cm)	200
Plug type	Schuko
Chimney height (mm)	0
Height of product, without chimney (mm)	0
Height of the product	770
Width of the product	860
Depth of the product	400
Minimum niche height	0
Minimum niche width	0
Niche depth	0
Net weight (kg)	22

TECHNICAL FEATURES

Type of manual control devices	Touch control
Type of automatic control devices	-
Number of motors	1
Total power of the motors (W)	110
Number of speed settings: boost option availability	3
Boost presence	Yes
Maximum output air extraction (m³/h)	603
Boost position air extraction (m³/h)	603
Maximum output recirculating air (m³/h)	0
Boost position output recirculating (m³/h)	0
Light Control Type	-
Number of lights	0
Type of lamps used	N/A
Total power of the lamps (W)	0
Diameter of air outlet (mm)	0
No-return airflow flap	No
Grease filter material	Washable aluminium
Odour filter	No

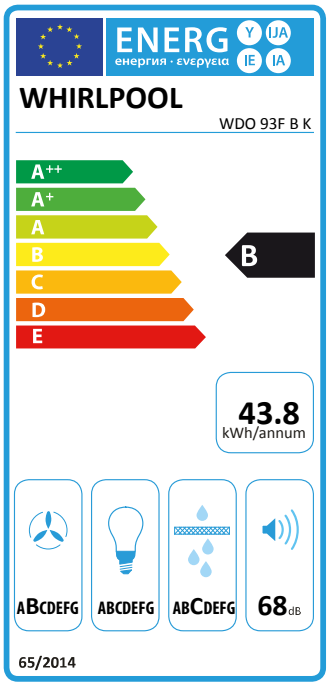

PERFORMANCES

Sound power at min. speed (2010/30/EU)	54
Sound power at max. speed (2010/30/EU)	68
Noise level with boost position (dB(A) re 1 pW)	0