REAL GEAR FOR REAL GAMERS

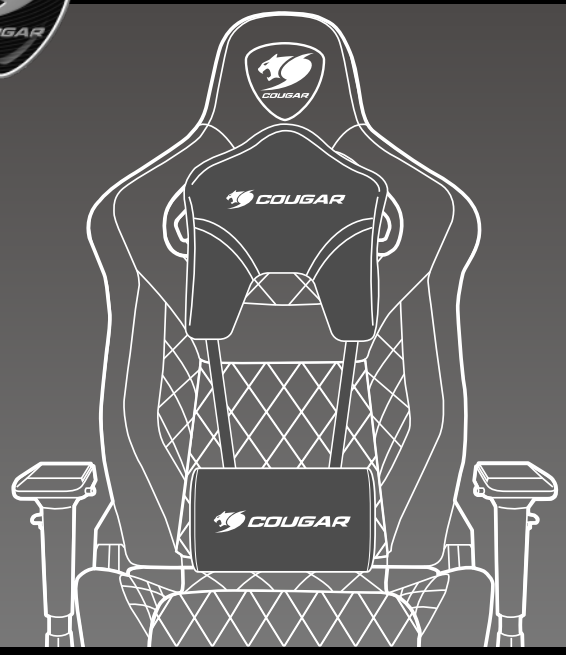

ARMOR TITAN

COUGAR GAMING CHAIR

FEATURES

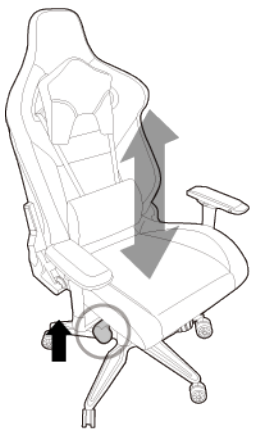

・Height lifting (Right)

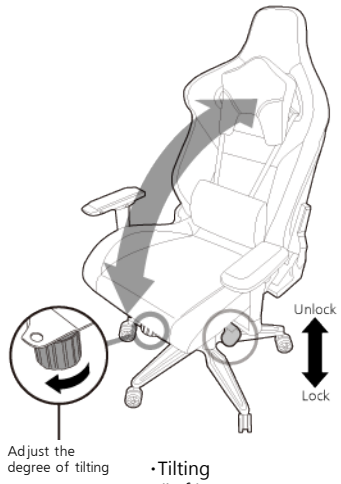

・Tilting (Left)

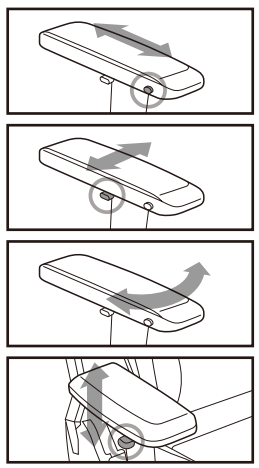

・Adjustable armrest



・Angle adjustor

ASSEMBLY DRAWING



ACCESSORY KIT

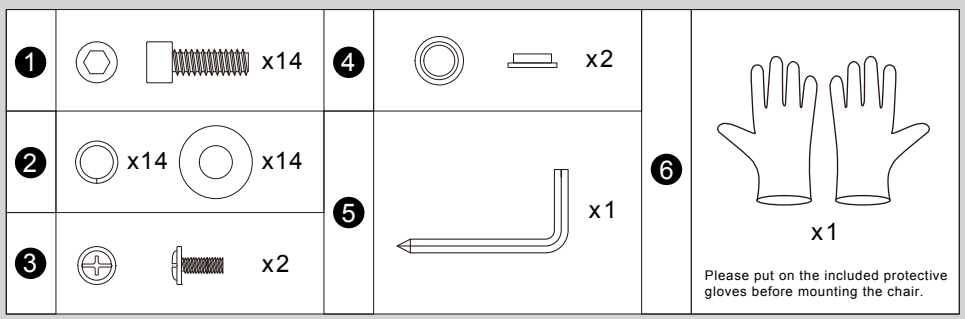

1 2 The screws have been pre-installed on the chair's parts

DISTRIBUTOR

COUGAR ARMOR TITAN The Ultimate Gaming Chair. ARMOR TITAN is the perfect gaming throne for those who want to enjoy their games in absolute comfort while enjoying a visually attractive gaming chair. Endowed with an extra-large build and with support for up to 160kg, plenty of adjustment options and top-quality materials, if you're looking for the best gaming chair, you're looking for ARMOR TITAN!

ENGLISH
- Unparalleled Comfort
- Body-Embracing High Back Design
- Full Steel Frame
- Supports Up to 160 Kg
- 170° Reclining
- Extra-Wide Seating Area
- High-Density Mold Shaping Foam
- Class 4 Gas Lift for Height Adjustment
- 4D Adjustable Armrest
- 5-star Aluminum Alloy Base with Extra-Size Wheels
- Breathable Premium PVC leather

ESPACOL
- Comodidad Incomparable
- Estructura de Acero
- Soporta hasta 160 Kg
- Reclinación de hasta 170°
- Reposabrazos Ajustable 4D
- Base de Cinco Puntas de Aleación de Aluminio
- Cuero de PVC respirable

PORTUGUKS
- Conforto Incomparável
- Estrutura feita totalmente em aço
- Suporta até 160 Kg
- Reclinável em até 170 graus
- Descanso de braços ajustável 4D
- Base de Estrela em Liga de Alumínio
- Couro de PVC respirável

ITALIANO
- Comfort incomparabile
- Struttura in acciaio
- Supporta fino a 160 Kg
- Reclinabile fino à 170°
- Bracciolo 4D regolabile
- Base a stella (cinque raggi) in lega di alluminio
- Finta pelle in PVC

ASSEMBLING INSTRUCTION

1

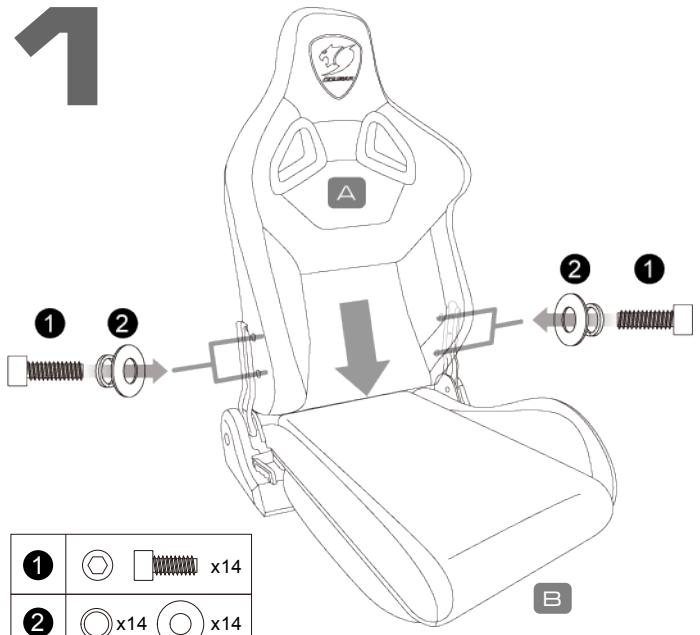

1		x14
2	x14	x14

The screws have been pre-installed on the chair's parts

2

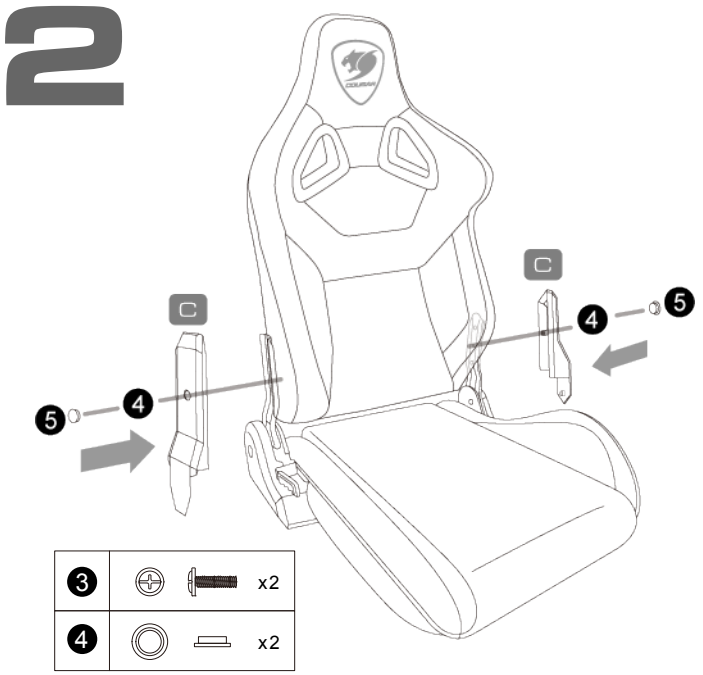

3		x2
4		x2

3

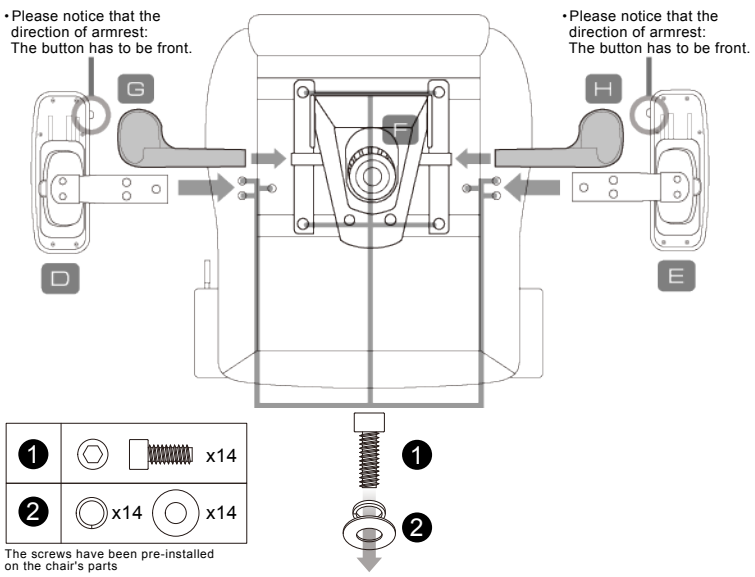

1		x14
2	x14	x14

The screws have been pre-installed on the chair's parts

4

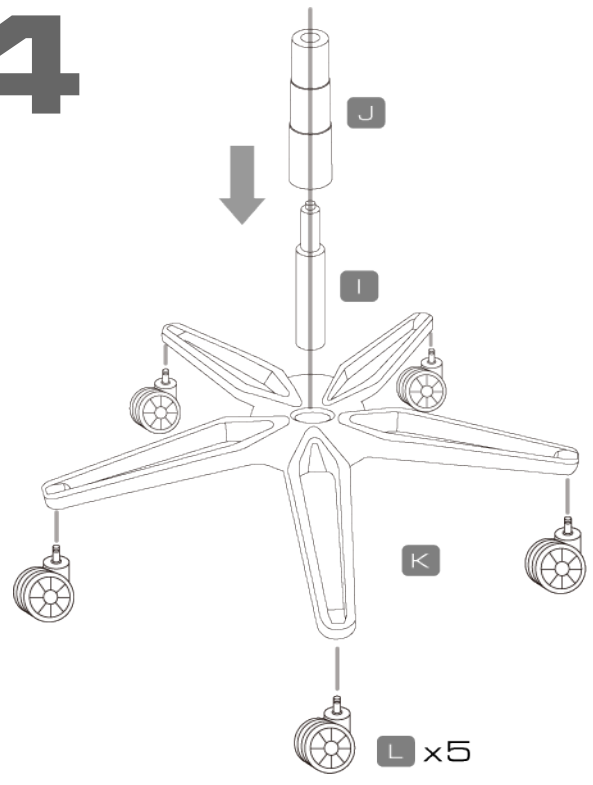

5

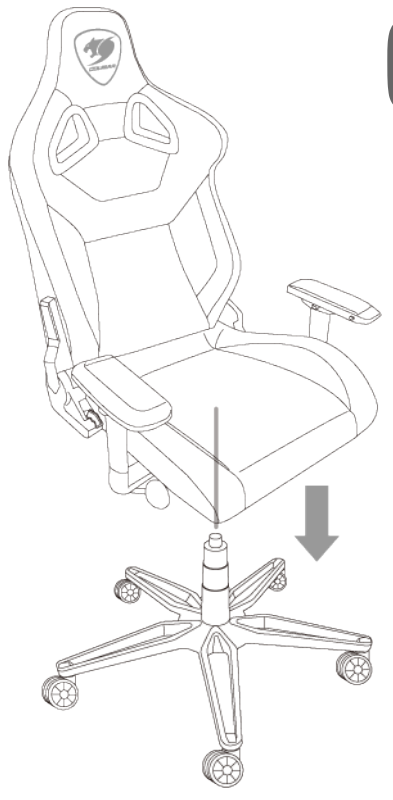

6

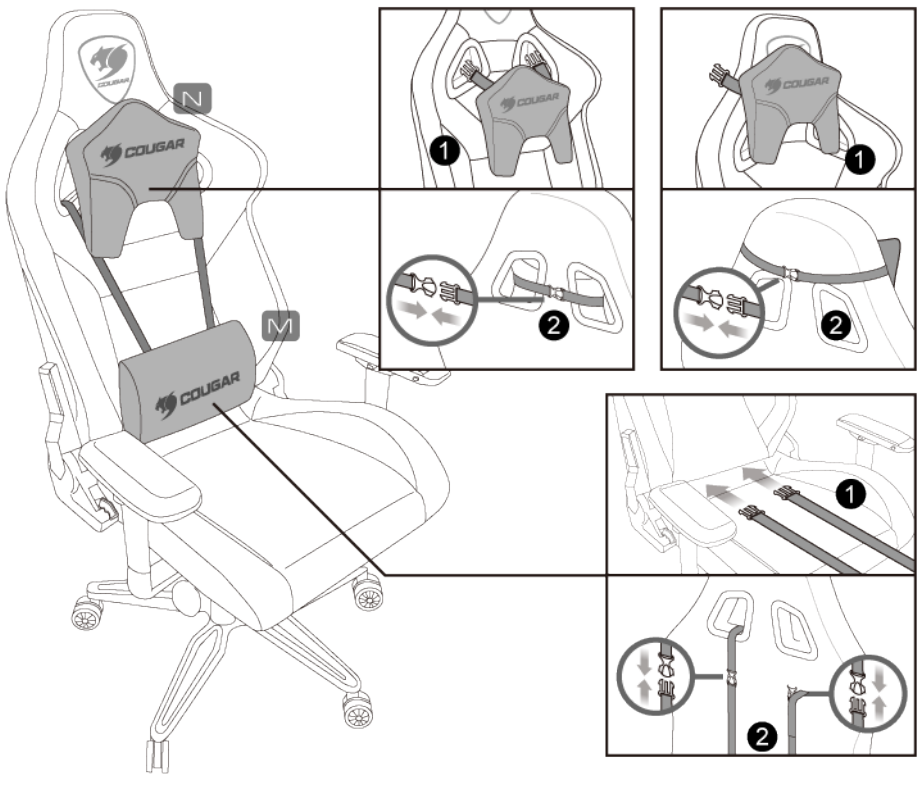

GLOBAL WARRANTY POLICY

WARRANTY PERIODS OF COUGAR GAMING DEVICES

Product : COUGAR GAMING CHAIR
Warranty : 1 Year
This warranty gives you specific legal rights. You may also have other rights granted under local law. These rights may vary.

WARRANTY AGREEMENT

- If the product has defects in material or manufacture, COUGAR will provide product repair and replacement service within the warranty period.
- Our warranty service is based on the date of the invoice or warranty card.

CONDITIONS WHERE FREE MAINTENANCE IS NOT PROVIDED

- Any fault or damage caused by natural disasters (including storm, fire, flood, thunder, earthquake, etc).
- Any fault or damage caused by accidental factors and man-made reasons (including hit, scrape, crash, moving, compression, stain, corrosion, riot, misuse, malicious damage, etc).
- Use in an improper operating environment (including high temperature, high humidity, water inflow, etc).
- Inability to provide the product warranty card, purchase receipt or invoice to prove the product is still within the warranty period and the shipping date of the product is out of warranty.
- The warranty card has been altered or its number is hard to identify.
- The warranty period has expired.
- Any fault or damage caused by non-compliance with regulations stated on the user manual or improper, rough and careless treatment.
- Any fault or damage caused by use of parts not certified by COUGAR original manufacturer.
- The problem is caused by improper repair or adjustment by the buyer or any manufacturer without authorization from COUGAR.
- The product is not acquired from an authorized distributor of the company or is acquired from illicit sources.
- Paper carton, instruction and other accessories are not warranted.

DISCLAIMERS

- COUGAR products should not be used as critical components in life support devices.
- COUGAR is not liable for any damage of life and limb or damage or loss of property caused by or during COUGAR products' use as or with medical equipment, military equipment, traffic equipment and disaster prevention systems.
- COUGAR's warranty liability is limited to repair or replacement. The decision on whether to repair or replace belongs exclusively to COUGAR.
- COUGAR is, to the extent not prohibited by law, not liable for any damages; expenses; lost data, revenues, savings or profits; or any incidental or consequential damages happened while the use of a defective product from COUGAR or due to its use.

LEGAL NOTICES

This manual was created by Compucase Enterprise and may not be completely or partially copied, passed on, distributed or stored without written consent by Compucase Enterprise. COUGAR® is a registered brand of Compucase Enterprise Other product and company names mentioned in this documentation may be brands or trademarks of their respective owners. Compucase Enterprise reserves the right to make changes concerning the contents of the manual and the technical data of the product without previous announcement.

MANUFACTURER CONTACT

Compucase Enterprise Co.,Ltd.
No. 225, Lane 54, An Ho Road Sec. 2 Tainan, Taiwan, R.O.C
Tel:+886-6-356-0606

COUGAR USA Technical Service
Tel: (833) 256-3778
Mail: rma@compucaseusa.com

Service email : https://cougargaming.com/support/contact/upload/

Compucase Enterprise Co.,Ltd. All rights reserved. Made in China

ДАТА ИЗГОТОВЛЕНИЯ ПРОДУКЦИИ

год и месяц изготовления продукции указаны в серийном номере продукта.
(существует 2 способа определения даты изготовления, оба способа описаны ниже)

Ⓐ После S/N: первые две цифры означают год, вторые две – месяц изготовления.
Например, S/N: H**1702**000001 означает, что товар был произведен в феврале 2017 года.

Ⓑ После S/N: если указаны буквы, то две буквы представляют цифры из таблицы ниже, и означают год, последующие две цифры – месяц изготовления.
Например, S/N: D**AG02**REVI000001 означает, что товар был произведен в феврале 2017 года.

A	B	C	D	E	F	G	H	I	J
1	2	3	4	5	6	7	8	9	0

• Например, AG = 17 = 2017 год

WARNING

- To adjust the chair height, gently pull the lever up. Do not use excessive force to pull the lever.
- Please wear protective gloves when assembling the chair. It is your own responsibility to use appropriate protection to prevent any physical damage.
- When rocking the chair, using it in any other way or adjusting the height, inclination, position or balance of the chair or any of its components, please:
  - pay attention to your hand's position and keep it away from spaces in which it could get caught or be injured.
  - do not make fast or violent movements.
  - (when the chair is in movement) do not touch any of the chair's adjustment controls to prevent affecting its stability and causing a potentially dangerous fall.
  - (when reclining the chair to its full extent) set the related control level in lock position and keep both feet on the ground, as well as abstain from any violent, rough or strong movement which could cause the chair to tip over.
  - keep in mind that this chair is designed only for sitting and reclining, and that it should be used only for those uses.
  - Do not sit on the edge of the chair or the arm rests.
- Do not place the chair in a location in which it is likely to be subjected to prolongated sunlight exposure. The product's colors might fade when exposed to sunlight.
- Do not use abrasive products or scrub energetically when cleaning. Please stick to gentle products suitable for delicate materials.
- All parts should be checked monthly to confirm their integrity and to make sure that the screws are not loose.
- If any part of the product is or appears to be damaged, missing or loose, please contact the local distributor and do not use the product.

⚠ Maximum stationary weight capacity 160kg. Please do not place any body or object above 160kg on this chair.

COUGAR
REAL GEAR FOR REAL GAMERS

www.cougargaming.com
facebook.com/cougargaming
youtube.com/user/COUGARGLOBAL