PHILIPS

hue

Liane wall light

Hue White and Colour Ambiance

- Integrated LED
- Bluetooth control via app
- Control with app or voice*
- Add Hue Bridge to unlock more

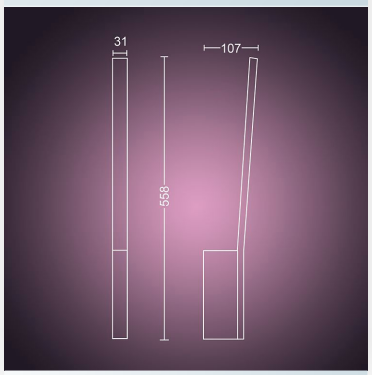

4090231P9



Easy smart lighting

The Liane wall lamp has a sleek design and indirect light effect. Create the perfect atmosphere with any shade of white or coloured light. Works as a standalone light or as part of your smart lighting system with the Hue Bridge.

Easy smart lighting

- Control up to 10 lights with the Bluetooth app
- Control lights with your voice*
- Create a personalised experience with colourful smart light
- Set the right mood with warm to cool white light
- Get the perfect light recipes for your daily activities
- Unlock the full suite of smart lighting features with the Bridge

Issue date: 2026-01-14 Version: 0.212

Highlights

Control up to 10 lights with the Bluetooth app

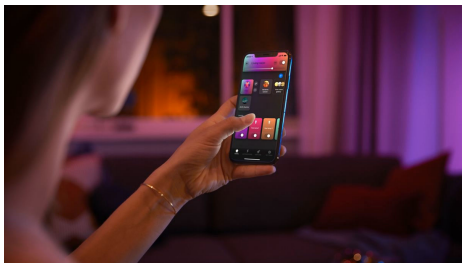

With the Hue Bluetooth app, you can control your Hue smart lights in a single room of your home.Add up to 10 smart lights and control them all with just the touch of a button on your mobile device.

Control lights with your voice*

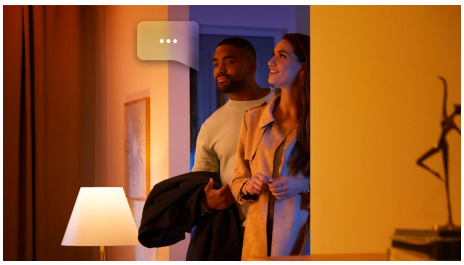

Philips Hue works with Amazon Alexa and the Google Assistant when paired with a compatible Google Nest or Amazon Echo device. Simple voice commands allow you to control multiple lights in a room, or just a single lamp.

Create a personalised experience with colourful smart light

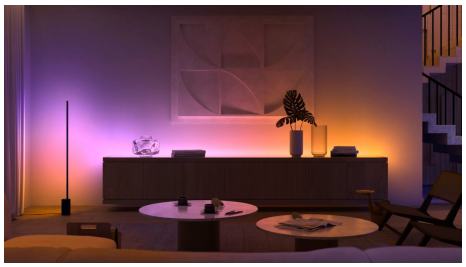

Transform your home with over 16 million colours, instantly creating the right atmosphere for any event. With the touch of a button, you can set a festive mood for a party, turn your living room into a movie theatre, enhance your home decor with colour accents, and much more.

Set the right mood with warm to cool white light



These bulbs and light fixtures offer different shades of warm to cool white light. With complete dimmability from bright to low nightlights, you can tune your lights to the perfect shade and brightness of light for your daily needs.

Get the perfect light recipes for your daily activities

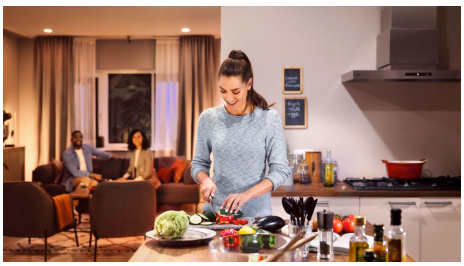

Make your day easier and more pleasant with four pre-set light recipes handcrafted especially for your daily tasks: Energise, Concentrate, Read and Relax. The two cool-toned scenes, Energise and Concentrate, help you get going in the morning or keep your focus, while the warmer scenes of Read and Relax help support comfortable reading or calm a busy mind.

Unlock the full suite of smart lighting features with the Bridge



The Bridge unlocks the features that make smart lighting truly smart – away-from-home control, voice control, automated lighting and much more. Add a Bridge to your setup to create immersive experiences, tap into technology that's secure and reliable, and more. The Bridge is the key to smart lighting like you've never seen before.

Specifications

Design and finishing
- Colour: White
- Material: Aluminium

Durability
- Nominal lifetime: 25,000

Extra feature/accessory incl.
- Dimmable with the Hue app and switches: Yes
- LED integrated: Yes

Light characteristics
- Colour temperature: 2000-6500 K

Miscellaneous
- Especially designed for: Office, Study
- Style: Modern
- Type: Wall Lights
- EyeComfort: No

Product dimensions and weight
- Net weight: 0.464 kg
- Overall height: 558 mm
- Overall length: 31 mm
- Overall width: 107 mm

Service
- Warranty: 2 year(s)

Technical specifications
- Total lumen output fixture: 900 lm
- Light colour: Coloured and white light (RGBW)
- Mains power: Range 100 V–240 V
- Fixture dimmable: Yes
- Wattage bulb included: 12 W
- IP code: IP20 | Finger-protected
- Class of protection: Class II – Double Insulated
- Number of light sources: 1

What's supported
- Compatible with Effects feature: Yes
- Philips Hue App: Android 10.0 and above, iOS 16 or later
- WiFi: Works without Wi-Fi
- Defined support period: Minimum of 48 months after introduction date
- Max. number of accessories: 12 (with Hue Bridge)
- Communication protocol: Bluetooth, Zigbee
- Compatibility with third-party systems: Alexa, Google Home, Apple HomeKit, IFTTT, Klikaanklikuit, Matter, Samsung SmartThings, Sonos

Box specifications

Packaging dimensions and weight
- EAN/UPC - product: 8718696174562
- Net weight: 0.46 kg
- Gross weight: 0.68 kg
- Height: 40 mm
- Length: 165 mm
- Width: 612 mm

© 2026 Signify Holding. All rights reserved. Signify does not give any representation or warranty as to the accuracy or completeness of the information included herein and shall not be liable for any action in reliance thereon. The information presented in this document is not intended as any commercial offer and does not form part of any quotation or contract, unless otherwise agreed by Signify. Philips and the Philips Shield Emblem are registered trademarks of Koninklijke Philips N.V.