

User Manual
Oven

EN

EOE7C31X
EOE7C31Z
EOE7C31V



electrolux.com/register

Electrolux

WE'RE THINKING OF YOU

Thank you for purchasing an Electrolux appliance. You've chosen a product that brings with it decades of professional experience and innovation. Ingenious and stylish, it has been designed with you in mind. So whenever you use it, you can be safe in the knowledge that you'll get great results every time.
Welcome to Electrolux.

Visit our website to:



Get usage advice, brochures, trouble shooter, service and repair information:
www.electrolux.com/support



Register your product for better service:
www.registerelectrolux.com



Buy Accessories, Consumables and Original spare parts for your appliance:
www.electrolux.com/shop

CUSTOMER CARE AND SERVICE

Always use original spare parts.
When contacting our Authorised Service Centre, ensure that you have the following data available: Model, PNC, Serial Number.
The information can be found on the rating plate.

⚠ Warning / Caution-Safety information

ⓘ General information and tips

Environmental information

Subject to change without notice.

CONTENTS

1. SAFETY INFORMATION.....3
2. SAFETY INSTRUCTIONS.....4
3. INSTALLATION.....7
4. PRODUCT DESCRIPTION.....9
5. CONTROL PANEL.....9
6. BEFORE FIRST USE.....11
7. DAILY USE.....12
8. CLOCK FUNCTIONS.....13
9. AUTOMATIC PROGRAMMES.....15
10. USING THE ACCESSORIES.....16
11. ADDITIONAL FUNCTIONS.....18
12. HINTS AND TIPS.....20
13. CARE AND CLEANING.....23
14. TROUBLESHOOTING.....26
15. ENERGY EFFICIENCY.....28
16. ENVIRONMENTAL CONCERNS.....29

1. ⚠ SAFETY INFORMATION

Before the installation and use of the appliance, carefully read the supplied instructions. The manufacturer is not responsible for any injuries or damage that are the result of incorrect installation or usage. Always keep the instructions in a safe and accessible location for future reference.

1.1 Children and vulnerable people safety

- This appliance can be used by children aged from 8 years and above and persons with reduced physical, sensory or mental capabilities or lack of experience and knowledge if they have been given supervision or instruction concerning the use of the appliance in a safe way and understand the hazards involved. Children of less than 8 years of age and persons with very extensive and complex disabilities shall be kept away from the appliance unless continuously supervised.
- Children should be supervised to ensure that they do not play with the appliance.
- Keep all packaging away from children and dispose of it appropriately.
- WARNING: The appliance and its accessible parts become hot during use. Keep children and pets away from the appliance when in use and when cooling down.
- If the appliance has a child safety device, it should be activated.
- Children shall not carry out cleaning and user maintenance of the appliance without supervision.

1.2 General Safety

- This appliance is for cooking purposes only.
- This appliance is designed for single household domestic use in an indoor environment.
- This appliance may be used in, offices, hotel guest rooms, bed & breakfast guest rooms, farm guest houses and other

similar accommodation where such use does not exceed (average) domestic usage levels.
- Only a qualified person must install this appliance and replace the cable.
- Do not use the appliance before installing it in the built-in structure.
- Disconnect the appliance from the power supply before carrying out any maintenance.
- If the mains power supply cable is damaged, it must be replaced by the manufacturer, its Authorised Service Centre or similarly qualified persons to avoid an electrical hazard.
- WARNING: Ensure that the appliance is switched off before replacing the lamp to avoid the possibility of electric shock.
- WARNING: The appliance and its accessible parts become hot during use. Care should be taken to avoid touching heating elements or the surface of the appliance cavity.
- Always use oven gloves to remove or insert accessories or ovenware.
- Use only the food sensor (core temperature sensor) recommended for this appliance.
- To remove the shelf supports first pull the front of the shelf support and then the rear end away from the side walls. Install the shelf supports in the opposite sequence.
- Do not use a steam cleaner to clean the appliance.
- Do not use harsh abrasive cleaners or sharp metal scrapers to clean the glass door since they can scratch the surface, which may result in shattering of the glass.

2. SAFETY INSTRUCTIONS

2.1 Installation

WARNING!
Only a qualified person must install this appliance.

- Remove all the packaging.
- Do not install or use a damaged appliance.
- Follow the installation instructions supplied with the appliance.
- Always take care when moving the appliance as it is heavy. Always use safety gloves and enclosed footwear.
- Do not pull the appliance by the handle.
- Install the appliance in a safe and suitable place that meets installation requirements.
- Keep the minimum distance from other appliances and units.

- Before mounting the appliance, check if the appliance door opens without restraint.
- The appliance is equipped with an electric cooling system. It must be operated with the electric power supply.

Cabinet minimum height (Cabinet under the worktop minimum height)	590 (600) mm
Cabinet width	560 mm
Cabinet depth	550 (550) mm
Height of the front of the appliance	594 mm
Height of the back of the appliance	576 mm
Width of the front of the appliance	595 mm
Width of the back of the appliance	559 mm
Depth of the appliance	569 mm
Built in depth of the appliance	548 mm
Depth with open door	1022 mm
Ventilation opening minimum size. Opening placed on the bottom rear side	560x20 mm
Mains supply cable length. Cable is placed in the right corner of the back side	1500 mm
Mounting screws	4x25 mm

2.2 Electrical connection

WARNING!
Risk of fire and electric shock.

- All electrical connections should be made by a qualified electrician.
- The appliance must be earthed.
- Make sure that the parameters on the rating plate are compatible with the electrical ratings of the mains power supply.
- Always use a correctly installed shockproof socket.
- Do not use multi-plug adapters and extension cables.
- Make sure not to cause damage to the mains plug and to the mains cable. Should the mains cable need to be replaced, this must be carried out by our Authorised Service Centre.
- Do not let mains cables touch or come near the appliance door or the niche below the appliance, especially when it operates or the door is hot.
- The shock protection of live and insulated parts must be fastened in such a way that it cannot be removed without tools.
- Connect the mains plug to the mains socket only at the end of the installation. Make sure that there is access to the mains plug after the installation.
- If the mains socket is loose, do not connect the mains plug.
- Do not pull the mains cable to disconnect the appliance. Always pull the mains plug.
- Use only correct isolation devices: line protecting cut-outs, fuses (screw type fuses removed from the holder), earth leakage trips and contactors.
- The electrical installation must have an isolation device which lets you disconnect the appliance from the mains at all poles. The isolation device must have a contact opening width of minimum 3 mm.
- This appliance is supplied with a main plug and a main cable.

Cable types applicable for installation or replacement for Europe:
H07 RN-F, H05 RN-F, H05 RRF, H05 VV-F, H05 V2V2-F (T90), H05 BB-F

For the section of the cable refer to the total power on the rating plate. You can also refer to the table:

Total power (W)	Section of the cable (mm^2)
maximum 1380	3x0.75
maximum 2300	3x1
maximum 3680	3x1.5

The earth cord (green / yellow cable) must be 2 cm longer than phase and neutral cables (blue and brown cables).

2.3 Use

WARNING!
Risk of injury, burns and electric shock or explosion.

- Do not change the specification of this appliance.
- Make sure that the ventilation openings are not blocked.
- Do not let the appliance stay unattended during operation.
- Deactivate the appliance after each use.
- Be careful when you open the appliance door while the appliance is in operation. Hot air can release.
- Do not operate the appliance with wet hands or when it has contact with water.
- Do not apply pressure on the open door.
- Do not use the appliance as a work surface or as a storage surface.
- Open the appliance door carefully. The use of ingredients with alcohol can cause a mixture of alcohol and air.
- Do not let sparks or open flames to come in contact with the appliance when you open the door.
- Do not put flammable products or items that are wet with flammable products in, near or on the appliance.

WARNING!
Risk of damage to the appliance.

- To prevent damage or discoloration to the enamel:
  - do not put ovenware or other objects in the appliance directly on the bottom.
  - do not put aluminium foil directly on the bottom of cavity of the appliance.
  - do not put water directly into the hot appliance.
  - do not keep moist dishes and food in the appliance after you finish the cooking.
  - be careful when you remove or install the accessories.
- Discoloration of the enamel or stainless steel has no effect on the performance of the appliance.
- Use a deep pan for moist cakes. Fruit juices cause stains that can be permanent.
- Always cook with the appliance door closed.
- If the appliance is installed behind a furniture panel (e.g. a door) make sure the door is never closed when the appliance operates. Heat and moisture can build up behind a closed furniture panel and cause subsequent damage to the appliance, the housing unit or the floor. Do not close the furniture panel until the appliance has cooled down completely after use.

2.4 Care and cleaning

WARNING!
Risk of injury, fire, or damage to the appliance.

- Before maintenance, deactivate the appliance and disconnect the mains plug from the mains socket.
- Make sure the appliance is cold. There is the risk that the glass panels can break.
- Replace immediately the door glass panels when they are damaged. Contact the Authorised Service Centre.
- Be careful when you remove the door from the appliance. The door is heavy!
- Clean regularly the appliance to prevent the deterioration of the surface material.
- Clean the appliance with a moist soft cloth. Use only neutral detergents. Do not use abrasive products, abrasive cleaning pads, solvents or metal objects.
- If you use an oven spray, follow the safety instructions on its packaging.
- Do not clean the catalytic enamel with detergents.

2.5 Internal lighting

WARNING!
Risk of electric shock.

- Concerning the lamp(s) inside this product and spare part lamps sold separately: These lamps are intended to withstand extreme physical conditions in household appliances, such as temperature, vibration, humidity, or are intended to signal information about the operational status of the appliance. They are not intended to be used in other applications

and are not suitable for household room illumination.
- This product contains a light source of energy efficiency class G.
- Use only lamps with the same specifications.

2.6 Service

- To repair the appliance contact the Authorised Service Centre.
- Use original spare parts only.

2.7 Disposal

WARNING!
Risk of injury or suffocation.

- Contact your municipal authority for information on how to dispose of the appliance.
- Disconnect the appliance from the mains supply.
- Cut off the mains electrical cable close to the appliance and dispose of it.
- Remove the door catch to prevent children or pets from becoming trapped in the appliance.

3. INSTALLATION

WARNING!
Refer to Safety chapters.

3.1 Building in

YouTube **www.youtube.com/electrolux**
www.youtube.com/aeg

How to install your AEG/Electrolux Oven - Column installation

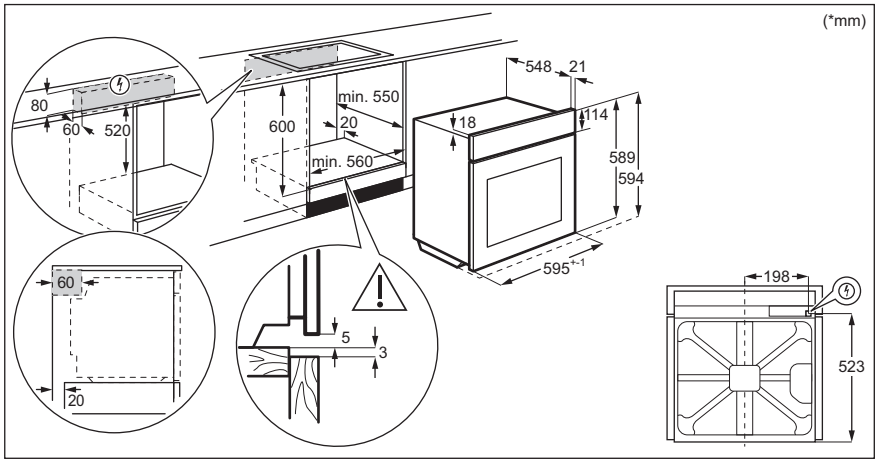

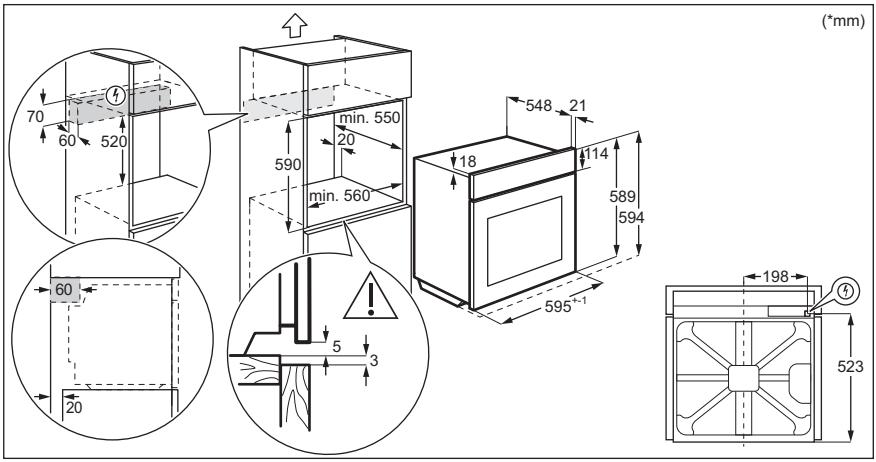

3.2 Securing the oven to the cabinet

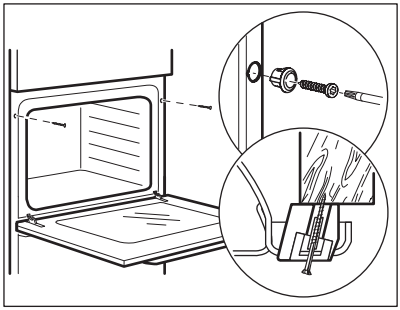

4. PRODUCT DESCRIPTION

4.1 General overview

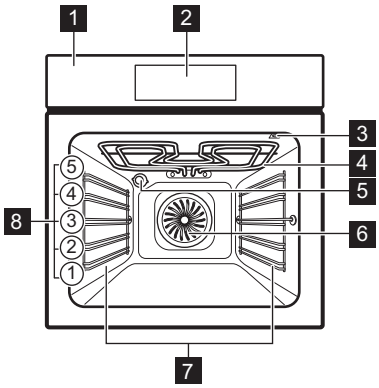

1 Control panel
2 Electronic programmer
3 Socket for the food sensor
4 Heating element
5 Lamp
6 Fan
7 Shelf support, removable
8 Shelf positions

4.2 Accessories

- **Wire shelf**
  For cookware, cake tins, roasts.
- **Baking tray**
  For cakes and biscuits.
- **Grill- / Roasting pan**
  To bake and roast or as pan to collect fat.
- **Food sensor**
  To measure how far the food is cooked.
- **Telescopic runners**
  With the telescopic runners you can put in and remove the shelves more easily.

5. CONTROL PANEL

5.1 Electronic programmer



Use the sensor fields to operate the oven.

	Sensor Field	Function	Description
1		ON / OFF	To turn the oven on and off.

	Sensor Field	Function	Description
2		Options	To set a heating function, a cleaning function or an automatic programme.
3		Oven Light	To turn the oven lamp on and off.
4	>>3s	Temperature / Fast Heat Up	To set or check the temperature. Press and hold it for three seconds to turn on and off the function: Fast Heat Up.
5		My Favourite Programme	To store your favourite programme. Use it to access your favourite programme directly, also when the oven is off.
6	-	Display	Shows the current settings of the oven.
7		Up	To move up in the menu.
8		Down	To move down in the menu.
9		Clock	To set the clock functions.
10		Minute Minder	To set the Minute Minder.
11	OK	OK	To confirm the selection or setting.

5.2 Display

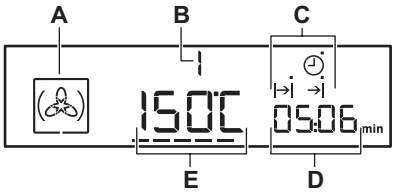

A. Heating function symbol
B. Number of the heating function / programme
C. Indicators for the clock functions (refer to "Clock functions" table)
D. Clock / residual heat display
E. Temperature / time of day display

Other indicators of the display:

Symbol	Name	Description
	Automatic programme	You can choose an automatic programme.
☆	**My favourite programme**	The favourite programme works.

Symbol	Name	Description
kg / g	**kg / g**	An automatic programme with weight input works.
h / min	**h / min**	A clock function works.
⎯⎯⎯	**Heat-up / residual heat indicator**	Shows the temperature level of the oven.
	Temperature / fast heat up	The function works.
	Temperature	You can examine or change the temperature.
	Core temperature sensor	The core temperature sensor is in the core temperature sensor socket.
	Minute minder	The minute minder function works.

5.3 Heat up indicator

If you turn on the heating function, ⎯⎯⎯ appears. The bars show that the temperature in the oven increases or decreases.

When the oven is at the set temperature, the bars go off the display.

6. BEFORE FIRST USE

WARNING!
Refer to Safety chapters.

6.1 Initial Cleaning

Step 1	Step 2	Step 3
Remove all accessories and removable shelf supports from the appliance.	Clean the appliance and the accessories with a microfibre cloth, warm water and a mild detergent.	Place the accessories and the removable shelf supports in the appliance.

6.2 Initial preheating

Preheat the empty oven before the first use.	
Step 1	Remove all accessories and removable shelf supports from the oven.
Step 2	Set the maximum temperature for the function: ⎯⎯. Let the oven operate for 1 h.
Step 3	Set the maximum temperature for the function: . Let the oven operate for 15 min.

ⓘ The oven can emit an odour and smoke during preheating. Make sure that the room is ventilated.

7. DAILY USE

WARNING!
Refer to Safety chapters.

7.1 Heating Functions

Oven function	Application
 True Fan Cooking	To bake on up to three shelf positions at the same time and to dry food. Set the temperature 20 - 40 °C lower than for Conventional Cooking.
 Pizza Function	To bake pizza. To make intensive browning and a crispy bottom.
 Conventional Cooking	To bake and roast food on one shelf position.
 Slow Cooking	To prepare tender, succulent roasts.
 Bottom Heat	To bake cakes with crispy bottom and to preserve food.
 Moist Fan Baking	This function is designed to save energy during cooking. When you use this function, the temperature in the cavity may differ from the set temperature. The residual heat is used. The heating power may be reduced. For more information refer to "Daily Use" chapter, Notes on: Moist Fan Baking.
 Defrost	To defrost food (vegetables and fruit). The defrosting time depends on the amount and size of the frozen food.
 Keep Warm	To keep food warm.

Oven function	Application
 Grill	To grill thin pieces of food and to toast bread.
 Fast Grilling	To grill thin pieces of food in large quantities and to toast bread.
 Turbo Grilling	To roast large meat joints or poultry with bones on one shelf position. To make gratins and to brown.

7.2 Notes on: Moist Fan Baking

This function was used to comply with the energy efficiency class and ecodesign requirements according to EU 65/2014 and EU 66/2014. Tests according to EN 60350-1.

The oven door should be closed during cooking so that the function is not interrupted and the oven operates with the highest energy efficiency possible.

When you use this function the lamp automatically turns off after 30 sec.

For the cooking instructions refer to "Hints and tips" chapter, Moist Fan Baking. For general energy saving recommendations refer to "Energy Efficiency" chapter, Energy Saving.

7.3 How to set: Heating Functions

1. Turn on the oven with ⏻.

The display shows the set temperature, the symbol and the number of the heating function.

2. Press ∧ or ∨ to set a heating function.
3. Press OK or the oven starts automatically after 5 seconds.

If you turn on the oven and do not set any heating function or programme, the oven turns off automatically after 20 seconds.

7.4 How to set: Temperature

Press ∧ or ∨ to change the temperature in steps: 5 °C.
When the oven is at the set temperature a signal sounds and the Heat up indicator disappears.

7.5 How to check: Temperature

You can check the current temperature in the oven when the function or programme works.

1. Press »3s.

The display shows the temperature in the oven.

2. Press OK or the display shows again the set temperature automatically after 5 seconds.

7.6 How to set: Fast Heat Up

Do not put food in the oven when the Fast heat up works.

The Fast Heat Up is available only for some heating functions. If Faulty Tone is turned on in the settings menu, the signal sounds if the Fast Heat Up is not available for the set function. Refer to "Additional functions" chapter, Using the settings menu.

The Fast Heat Up decreases the heat up time.

To turn on the Fast Heat Up press and hold »3s for more than 3 seconds.
If the Fast Heat Up is turned on the display shows flashing bars.

8. CLOCK FUNCTIONS

8.1 Clock functions table

Clock function		Application
🕘	Time of Day	To show or change the time of day. You can change the time of day only when the oven is on.
|→|	Duration	To set how long the oven works.
→|	End Time	To set when the oven turns off.
|→|→|	Time Delay	To combine Duration and End Time function.
🔔	Minute Minder	To set a countdown time. This function has no effect on the operation of the oven. You can set the Minute Minder at any time and also when the oven is off.
00:00	Count Up Timer	To set the count up, which shows how long the oven works. It is on immediately when the oven starts to heat. The Count Up Timer is not turned on if Duration and End Time are set. This function has no effect on the operation of the oven.

8.2 How to set: Time of Day

After the first connection to the mains, wait until the display shows h and **12:00**. "**12**" flashes.

1. Press ∧ or ∨ to set the hours.
2. Press OK.
3. Press ∧ or ∨ to set the minutes.
4. Press OK.

The display shows the new time.
To change the time of day press 🕘 again and again until 🕘 starts to flash.

8.3 How to set: Duration

1. Set a heating function and temperature.

2. Press ◴ again and again until |→| starts to flash.
3. Press ∧ or ∨ to set the minutes for Duration.
4. Press OK or the Duration starts automatically after 5 seconds.
5. Press ∧ or ∨ to set the hours for Duration.
6. Press OK or the Duration starts automatically after 5 seconds.

When the set time ends, the signal sounds for 2 minutes. The display shows flashing |→| and time setting. The oven turns off.

7. Press a sensor field to stop the signal.
8. Turn off the oven.

8.4 How to set: End Time

1. Set a heating function and temperature.
2. Press ◴ again and again until →| starts to flash.
3. Press ∧ or ∨ to set the End Time and press OK. First you set the minutes and then the hours.

When the set time ends, the signal sounds for 2 minutes. The display shows flashing →| and the time setting . The oven turns off automatically.

4. Press a sensor field to stop the signal.
5. Turn off the oven.

8.5 How to set: Time Delay

1. Set a heating function and temperature.
2. Press ◴ again and again until |→| starts to flash.
3. Press ∧ or ∨ to setthe minutes for Duration.
4. Press OK.
5. Press ∧ or ∨ to set the hours for Duration.
6. Press OK.

The display shows flashing →|.

7. Press ∧ or ∨ to set the End Time and press OK. First you set the minutes and then the hours.

The oven turns on automatically later on, works for the set Durationand stops at the set End Time. When the set time ends, the signal sounds for 2 minutes. The display shows flashing →| and the time setting . The oven turns off automatically.

8. Press a sensor field to stop the signal.
9. Turn off the oven.

When the Time Delay function is turned on, the display shows a symbol of the heating function, |→| with a dot and →|. The dot shows which clock function is on in the Clock / residual heat display.

8.6 How to set: Minute Minder

1. Press 🔔.

The display shows flashing 🔔 and "00".

2. Press 🔔 to switch between options. First you set the seconds, then the minutes and the hours.
3. Press ∧ or ∨ to set the Minute Minder and 🔔 to confirm.
4. Press OK or the Minute Minder starts automatically after 5 seconds.

When the set time ends, the signal sounds for 2 minutes and the display shows flashing 00:00 and 🔔.

5. Press a sensor field to stop the signal.

8.7 How to set: Count Up Timer

1. To reset the Count Up Timer press: ∨ and ∧ at the same time .
2. When the display shows "00:00" the Count Up Timer starts to count up again.

9. AUTOMATIC PROGRAMMES

WARNING!
Refer to Safety chapters.

There are 9 automatic programmes. Use an automatic programme or recipe when you do not have the knowledge or experience on how to prepare a dish. The display shows the default cooking times for all automatic programmes.

9.1 List of automatic programmes

	Programme
1	ROAST BEEF
2	ROAST PORK
3	CHICKEN, WHOLE
4	PIZZA
5	MUFFINS
6	QUICHE LORRAINE
7	WHITE BREAD
8	POTATO GRATIN
9	LASAGNE

9.2 How to use: automatic programmes

1. Activate the appliance.
2. Touch ☐.

The display shows the number of the automatic programme (1 – 9).

3. Touch ∧ or ∨ to choose the automatic programme.
4. Touch OK or wait five seconds until the appliance automatically starts to work.
5. When the set time ends, an acoustic signal sounds for two minutes. The symbol |→| flashes.
6. Touch a sensor field to stop the acoustic signal.
7. Deactivate the appliance.

9.3 How to use: automatic programmes with weight input

If you set the weight of the meat, the appliance calculates the roasting time.

1. Activate the appliance.
2. Touch ☐.
3. Touch ∧ or ∨ to set the weight programme.

The display shows: the cooking time, the duration symbol |→|, a default weight, a unit of measurement (kg, g).

4. Touch OK or the settings save automatically after five seconds.

The appliance activates.

5. You can change the default weight value with ∧ or ∨. Touch OK.
6. When the set time ends, an acoustic signal sounds for two minutes. |→| flashes.
7. Touch a sensor field to stop the acoustic signal.
8. Deactivate the appliance.

9.4 How to set: automatic programmes with Food Sensor

The core temperature of the food is default and fixed in programmes with the core temperature sensor. The programme ends when the appliance is at the set core temperature.

1. Activate the appliance.
2. Touch ☐.
3. Install the core temperature sensor. Refer to "Core temperature sensor".
4. Touch ∧ or ∨ to set the programme for the core temperature sensor.

The display shows the cooking time, |→| and .

5. Touch OK or the settings save automatically after five seconds.

When the set time ends, an acoustic signal sounds for two minutes. |→| flashes.

6. Touch a sensor field or open the door to stop the acoustic signal.
7. Deactivate the appliance.

10. USING THE ACCESSORIES

WARNING!
Refer to Safety chapters.

10.1 Core temperature sensor

There are two temperatures to be set: the oven temperature and the core temperature.

The core temperature sensor measures the core temperature of the meat. When the meat is at the set temperature, the appliance deactivates.

CAUTION!
Only use the core temperature sensor supplied or the correct replacement parts.

The core temperature sensor must stay in the meat and in the socket during the cooking.

1. Activate the appliance.
2. Put the point of the core temperature sensor (with on the handle) into the centre of the meat.
3. Put the plug of the core temperature sensor into the socket at the top of the cavity.

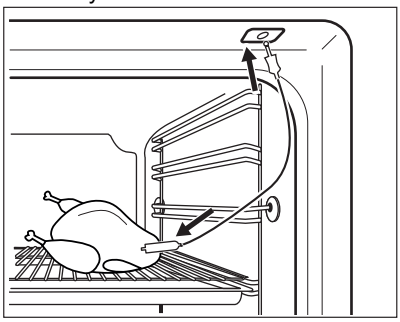

The display shows flashing and the default set core temperature. The temperature is 60 °C for the first operation, and the last set value for each subsequent operation.

When you put the core temperature sensor into the socket, you cancel the settings for the clock functions.

4. Touch or to set the core temperature.
5. Touch OK or the settings save automatically after 5 seconds.

You can set the core temperature only when flashes. If is in the display but does not flash before you set the core temperature, touch and or to set a new value.

6. Set the oven function and the oven temperature.

The display shows the current core temperature and the heat up symbol ___. While the appliance calculates the approximate duration time, the display shows the count up time. After the first calculation the display shows the approximate duration of the cooking time.
The appliance continues to calculate the duration during the cooking. The display updates at intervals with the new duration value.

When you cook with the core temperature sensor, you can change the temperature shown in the display. After you put the core temperature sensor in the socket and set an oven function and temperature, the display shows the current core temperature.

Touch »3s again and again to see three other temperatures:

- the set core temperature
- the current oven temperature
- the current core temperature.

When the meat is at the set core temperature, an acoustic signal sounds for two minutes and the value of the core temperature and flash. The appliance deactivates.

7. Touch a sensor field to deactivate the acoustic signal.
8. Remove the core temperature sensor from the socket and remove the meat from the appliance.

WARNING!
Be careful when you remove the core temperature sensor. It is hot. There is a risk of burns.

10.2 Inserting accessories

A small indentation at the top increases safety. The indentations are also anti-tip devices. The high rim around the shelf prevents cookware from slipping of the shelf.

Wire shelf:
Push the shelf between the guide bars of the shelf support and make sure that the feet point down.

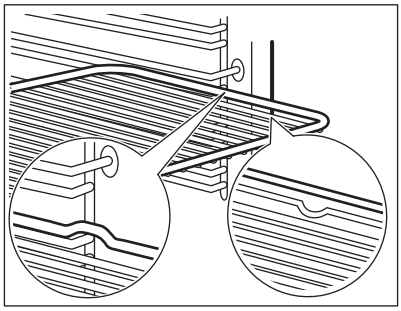

Baking tray / Deep pan:
Push the tray between the guide bars of the shelf support.

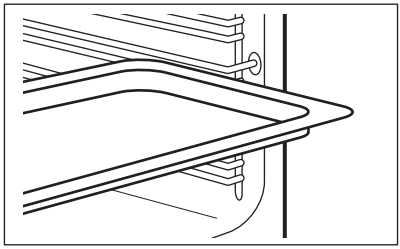

Wire shelf, Baking tray / Deep pan:
Push the tray between the guide bars of the shelf support and the wire shelf on the guide bars above.

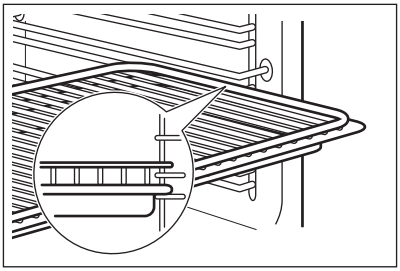

11. ADDITIONAL FUNCTIONS

11.1 Using My Favourite Programme function

Use this function to save your favourite temperature and time settings for an oven function or programme.

1. Set the temperature and time for an oven function or programme.
2. Touch and hold ☆ for more than three seconds. An acoustic signal sounds.
3. Deactivate the appliance.

- **To activate the function** touch ☆. The appliance activates your favourite programme.

When the function operates, you can change the time and temperature.

- **To deactivate the function** touch ⏻. The appliance deactivates your favourite programme.

11.2 Using Child Lock

The Child Lock prevents an accidental operation of the oven.

1. Press and hold ⏻ for 3 sec to turn off the oven.
2. Press and hold 🕘 and ∨ at the same time for 2 sec.

The signal sounds.
The display shows **SAFE**.
To turn off the Child Lock function repeat step 2.

11.3 Using the Function Lock

You can turn on the function only when the oven works.

The Function Lock prevents an accidental change of the oven function.

1. To turn on the function turn on the oven.
2. Turn on an oven function or setting.
3. Touch and hold 🕘 and ∨ at the same time for 2 seconds.

A signal sounds.
Lock comes on in the display.
To turn off the Function Lock repeat step 3.

You can turn off the oven when the Function Lock is on. When you turn off the oven, the Function Lock turns off.

11.4 Using the settings menu

The settings menu lets you turn on or turn off functions in the main menu. The display shows SET and the number of the setting.

	Description	Value to set
1	RESIDUAL HEAT INDICATOR	ON / OFF
2	KEY TONE[1)]	CLICK / BEEP / OFF
3	FAULTY TONE	ON / OFF
4	DEMO MODE	Activation code: 2468
5	SERVICE MENU	-
6	RESTORE SETTINGS	YES / NO

1) It is not possible to deactivate the tone of the ON / OFF sensor field.

1. Press and hold ☐ for 3 seconds.

The display shows SET1 and "1" flashes.

2. Press ∧ or ∨ to set the setting.
3. Press OK.
4. Press ∧ or ∨ to change the value of the setting.
5. Press OK.

To exit the Settings menu, press ⏻ or press and hold ☐.

11.5 Automatic switch-off

For safety reasons the oven turns off after some time, if a heating function works and you do not change any settings.

(°C)	(h)
30 - 115	12.5
120 - 195	8.5
200 - 245	5.5
250 - maximum	3

The Automatic switch-off does not work with the functions: Light, Food Sensor, Duration, Time Delay, End Time, Slow Cooking.

11.6 Brightness of the display

There are two modes of display brightness:

- Night brightness - when the appliance is deactivated, the brightness of the display is lower between 10 PM and 6 AM.
- Day brightness:
  - when the appliance is activated.
  - if you touch a sensor field during the night brightness (apart from ON / OFF), the display goes back to the day brightness mode for the next 10 seconds.
  - if the appliance is deactivated and you set the Minute Minder. When the Minute Minder function ends, the display goes back to the night brightness.

11.7 Cooling fan

When the appliance operates, the cooling fan turns on automatically to keep the surfaces of the appliance cool. If you turn off the appliance, the cooling fan can continue to operate until the appliance cools down.

11.8 Safety thermostat

Incorrect operation of the oven or defective components can cause dangerous overheating. To prevent this, the oven has a safety thermostat which interrupts the power supply. The oven turns on again automatically when the temperature drops.

12. HINTS AND TIPS

Refer to Safety chapters.

12.1 Cooking recommendations

The oven has five shelf positions.

Count the shelf positions from the bottom of the oven floor.

Your oven may bake or roast differently to the oven you had before.

Baking cakes
Do not open the oven door before 3/4 of the set cooking time is up.

If you use two baking trays at the same time, keep one empty level between them.

Cooking meat and fish
Use a deep pan for very fatty food to prevent the oven from stains that can be permanent.

Leave the meat for approximately 15 minutes before carving so that the juice does not seep out.

To prevent too much smoke in the oven during roasting, add some water into the deep pan. To prevent the smoke condensation, add water each time after it dries up.

Cooking times
Cooking times depend on the type of food, its consistency, and volume.

Initially, monitor the performance when you cook. Find the best settings (heat setting, cooking time, etc.) for your cookware, recipes and quantities when you use this appliance.

12.2 Moist Fan Baking - recommended accessories

Use the dark and non-reflective tins and containers. They have better heat absorption than the light colour and reflective dishes.

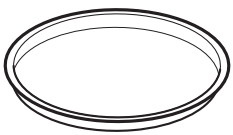

Pizza pan

Dark, non-reflective
28 cm diameter

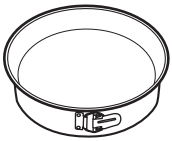

Baking dish

Dark, non-reflective
26 cm diameter



Ramekins

Ceramic
8 cm diameter, 5 cm height

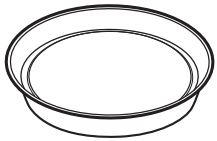

Flan base tin

Dark, non-reflective
28 cm diameter

12.3 Moist Fan Baking

For the best results follow suggestions listed in the table below.

		(°C)		(min)
Sweet rolls, 16 pieces	baking tray or dripping pan	180	2	20 - 30

		(°C)		(min)
Rolls, 9 pieces	baking tray or dripping pan	180	2	30 - 40
Pizza, frozen, 0.35 kg	wire shelf	220	2	10 - 15
Swiss roll	baking tray or dripping pan	170	2	25 - 35
Brownie	baking tray or dripping pan	175	3	25 - 30
Soufflè, 6 pieces	ceramic ramekins on wire shelf	200	3	25 - 30
Sponge flan base	flan base tin on wire shelf	180	2	15 - 25
Victoria sandwich	baking dish on wire shelf	170	2	40 - 50
Poached fish, 0.3 kg	baking tray or dripping pan	180	3	20 - 25
Whole fish, 0.2 kg	baking tray or dripping pan	180	3	25 - 35
Fish fillet, 0.3 kg	pizza pan on wire shelf	180	3	25 - 30
Poached meat, 0.25 kg	baking tray or dripping pan	200	3	35 - 45
Shashlik, 0.5 kg	baking tray or dripping pan	200	3	25 - 30
Cookies, 16 pieces	baking tray or dripping pan	180	2	20 - 30
Macaroons, 24 pieces	baking tray or dripping pan	180	2	25 - 35
Muffins, 12 pieces	baking tray or dripping pan	170	2	30 - 40
Savory pastry, 20 pieces	baking tray or dripping pan	180	2	25 - 30
Short crust biscuits, 20 pieces	baking tray or dripping pan	150	2	25 - 35
Tartlets, 8 pieces	baking tray or dripping pan	170	2	20 - 30
Vegetables, poached, 0.4 kg	baking tray or dripping pan	180	3	35 - 45
Vegetarian omelette	pizza pan on wire shelf	200	3	25 - 30
Mediterranean vegetables, 0.7 kg	baking tray or dripping pan	180	4	25 - 30

12.4 Information for test institutes

Tests according to IEC 60350-1.

				(°C)	(min)	
Small cakes, 20 per tray	Conventional Cooking	Baking tray	3	170	20 - 30	-
Small cakes, 20 per tray	True Fan Cooking	Baking tray	3	150 - 160	20 - 35	-
Small cakes, 20 per tray	True Fan Cooking	Baking tray	2 and 4	150 - 160	20 - 35	-
Apple pie, 2 tins Ø20 cm	Conventional Cooking	Wire shelf	2	180	70 - 90	-
Apple pie, 2 tins Ø20 cm	True Fan Cooking	Wire shelf	2	160	70 - 90	-
Sponge cake, cake mould Ø26 cm	Conventional Cooking	Wire shelf	2	170	40 - 50	Preheat the oven for 10 minutes.
Sponge cake, cake mould Ø26 cm	True Fan Cooking	Wire shelf	2	160	40 - 50	Preheat the oven for 10 minutes.
Sponge cake, cake mould Ø26 cm	True Fan Cooking	Wire shelf	2 and 4	160	40 - 60	Preheat the oven for 10 minutes.
Short bread	True Fan Cooking	Baking tray	3	140 - 150	20 - 40	-
Short bread	True Fan Cooking	Baking tray	2 and 4	140 - 150	25 - 45	-
Short bread	Conventional Cooking	Baking tray	3	140 - 150	25 - 45	-
Toast, 4 - 6 pieces	Grill	Wire shelf	4	max.	2 - 3 minutes first side; 2 - 3 minutes second side	Preheat the oven for 3 minutes.
Beef burger, 6 pieces, 0.6 kg	Grill	Wire shelf and dripping pan	4	max.	20 - 30	Put the wire shelf on the fourth level and the dripping pan on the third level of the oven. Turn the food halfway through the cooking time. Preheat the oven for 3 minutes.

13. CARE AND CLEANING

WARNING!
Refer to Safety chapters.

13.1 Notes on cleaning

 **Cleaning Agents**	Clean the front of the appliance with a microfibre cloth with warm water and a mild detergent. Clean and check the door gasket around the frame of the cavity.
	Use a cleaning solution to clean metal surfaces.
	Clean stains with a mild detergent. Do not apply it on the catalytic surfaces.
 **Everyday Use**	Clean the cavity after each use. Fat accumulation or other residue may cause fire.
	Moisture can condense in the appliance or on the door glass panels. To decrease the condensation, let the appliance work for 10 minutes before cooking. Do not store the food in the appliance for longer than 20 minutes. Dry the cavity with a microfibre cloth after each use.
 **Accessories**	Clean all accessories after each use and let them dry. Use a microfibre cloth with warm water and a mild detergent. Do not clean the accessories in a dishwasher.
	Do not clean the non-stick accessories using abrasive cleaner or sharp-edged objects.

13.2 How to remove: Shelf supports / catalytic panels

Remove the shelf supports / catalytic panels to clean the oven.

Step 1	Turn off the oven and wait until it is cold.
Step 2	Pull the front of the shelf support away from the side wall. Hold the rear of the shelf support and catalytic panel in place. The catalytic panels are not attached to the oven walls. They can fall out when you remove the shelf supports.
Step 3	Pull the rear end of the shelf support away from the side wall and remove it.
Step 4	Install the shelf supports in the opposite sequence. The retaining pins on the telescopic runners must point to the front.

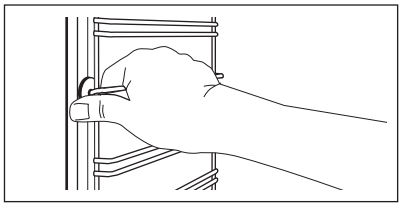

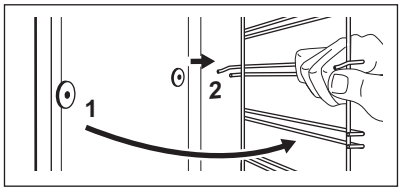

13.3 How to use: Catalytic cleaning

There are catalytic panels in the cavity. Catalytic panels absorb fat during catalysis.

Spots or discolouration of the catalytic coating have no effect on the cleaning.

Before the catalytic cleaning		
Turn off the oven and wait until it is cold.	Remove all accessories.	Clean the oven floor and the inner door glass with warm water, soft cloth and mild detergent.

Clean the oven with catalytic cleaning		
Step 1	**Step 2**	**Step 3**
Turn on the oven. Press ☐ again and again until the display shows: "Cata".	When the cleaning ends the signal sounds. The oven turns off. Press any symbol to turn off the signal.	When the oven is cold, clean the cavity with a wet soft cloth.
Duration: 1 h. You can delay the start of the cleaning with the function: End.		

13.4 How to remove and install: Door

The oven door has three glass panels. You can remove the oven door and the internal glass panels to clean them. Read the whole "Removing and installing door" instruction before you remove the glass panels.

CAUTION!
Do not use the oven without the glass panels.

Step 1 Open the door fully and hold both hinges.

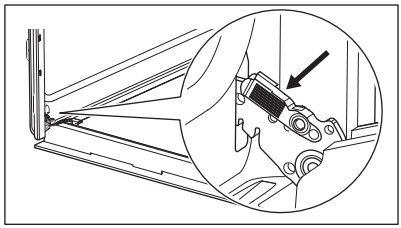

Step 2 Lift and pull the latches until they click.

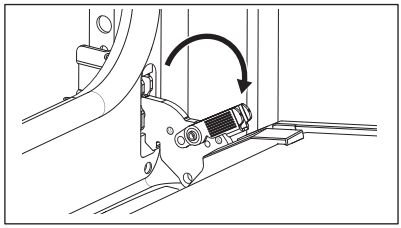

Step 3	Close the oven door halfway to the first opening position. Then lift and pull to remove the door from its seat.	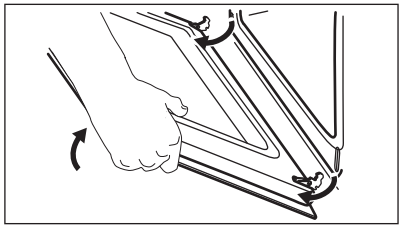
Step 4	Put the door on a soft cloth on a stable surface.	
Step 5	Hold the door trim (B) on the top edge of the door at the two sides and push inwards to release the clip seal.	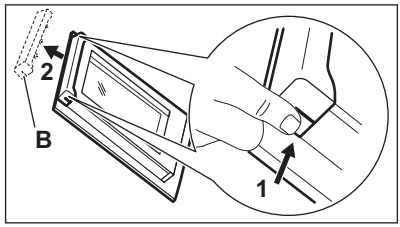
Step 6	Pull the door trim to the front to remove it.	
Step 7	Hold the door glass panels by their top edge and carefully pull them out one by one. Start from the top panel. Make make sure the glass slides out of the supports completely.	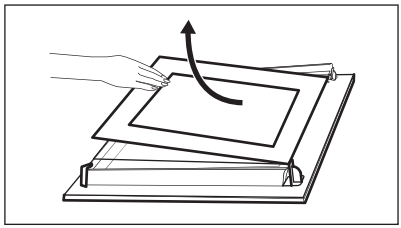
Step 8	Clean the glass panels with water and soap. Dry the glass panels carefully. Do not clean the glass panels in the dishwasher.	
Step 9	After cleaning, install the glass panels and the oven door.	

If the door is installed correctly, you will hear a click when closing the latches.

Make sure that you put the glass panels (A and B) back in the correct sequence. Check for the symbol / printing on the side of the glass panel, each of the glass panels looks different to make the disassembly and assembly easier.
When installed correctly the door trim clicks.
Make sure that you install the middle panel of glass in the seats correctly.

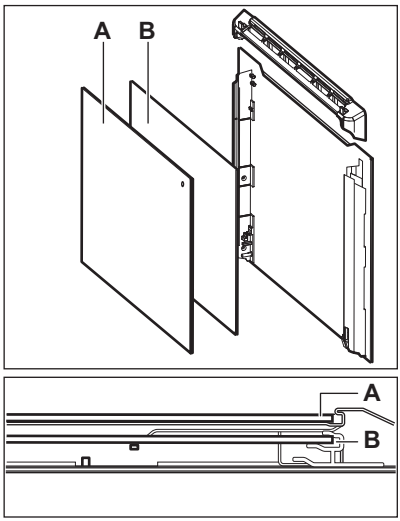

13.5 How to replace: Lamp

WARNING!
Risk of electric shock.
The lamp can be hot.

Always hold the halogen lamp with a cloth to prevent grease residue from burning on the lamp.

Before you replace the lamp:		
Step 1	**Step 2**	**Step 3**
Turn off the oven. Wait until the oven is cold.	Disconnect the oven from the mains.	Put a cloth on the bottom of the cavity.

Back lamp

Step 1	Turn the glass cover to remove it.
Step 2	Clean the glass cover.
Step 3	Replace the lamp with a suitable 300 °C heat-resistant lamp.
Step 4	Install the glass cover.

14. TROUBLESHOOTING

WARNING!
Refer to Safety chapters.

14.1 What to do if...

Problem	Possible cause	Remedy
You cannot activate or operate the oven.	The oven is not connected to an electrical supply or it is connected incorrectly.	Check if the oven is correctly connected to the electrical supply (refer to the connection diagram if available).
The oven does not heat up.	The oven is deactivated.	Activate the oven.
The oven does not heat up.	The clock is not set.	Set the clock.
The oven does not heat up.	The necessary settings are not set.	Make sure that the settings are correct.
The oven does not heat up.	The automatic switch-off is activated.	Refer to "Automatic switch-off".
The oven does not heat up.	The Child Lock is on.	Refer to "Using the Child Lock".
The oven does not heat up.	The fuse is blown.	Make sure that the fuse is the cause of the malfunction. If the fuse is blown again and again, contact a qualified electrician.
The lamp does not operate.	The lamp is defective.	Replace the lamp.
The display does not show the time during the off status.	The display is deactivated.	Touch and at the same time to activate the display again.
The food sensor does not operate.	The plug of the food sensor is not correctly installed into the socket.	Put the plug of the food sensor as far as possible into the socket.
It takes too long to cook the dishes or they cook too quickly.	The temperature is too low or too high.	Adjust the temperature if necessary. Follow the advice in the user manual.
Steam and condensation settle on the food and in the cavity of the oven.	You left the dish in the oven for too long.	Do not leave the dishes in the oven for longer than 15 - 20 minutes after the cooking process ends.
The display shows "C2".	You want to start the Catalysis or Defrost function, but you did not remove the food sensor plug from the socket.	Remove the food sensor plug from the socket.
The display shows "C3".	The cleaning function does not operate. You did not fully close the door, or the door lock is defective.	Fully close the door.
The display shows an error code that is not in this table.	There is an electrical fault.	• Deactivate the oven with the house fuse or the safety switch in the fuse box and activate it again. • If the display shows the error code again, contact the Customer Care Department.
The appliance is activated and does not heat up. The fan does not operate. The display shows **"Demo"**.	The demo mode is activated.	Refer to "Using the settings menu" in "Additional functions" chapter.

14.2 Service data

If you cannot find a solution to the problem yourself, contact your dealer or an Authorised Service Centre.

The necessary data for the service centre is on the rating plate. The rating plate is on the front frame of the appliance cavity. Do not remove the rating plate from the appliance cavity.

We recommend that you write the data here:	
Model (MOD.)	.....
Product number (PNC)	.....
Serial number (S.N.)	.....

15. ENERGY EFFICIENCY

15.1 Product Information and Product Information Sheet*

Supplier's name	Electrolux	
Model identification	EOE7C31X 949497303 EOE7C31Z 949497304 EOE7C31V 949497306	
Energy Efficiency Index	81.2	
Energy efficiency class	A+	
Energy consumption with a standard load, conventional mode	0.93 kWh/cycle	
Energy consumption with a standard load, fan-forced mode	0.69 kWh/cycle	
Number of cavities	1	
Heat source	Electricity	
Volume	72 l	
Type of oven	Built-In Oven	
Mass	EOE7C31V	31.1 kg
	EOE7C31X	31.3 kg
	EOE7C31Z	31.3 kg

* For European Union according to EU Regulations 65/2014 and 66/2014.
For Republic of Belarus according to STB 2478-2017, Appendix G; STB 2477-2017, Annexes A and B.
For Ukraine according to 568/32020.

Energy efficiency class is not applicable for Russia.

EN 60350-1 - Household electric cooking appliances - Part 1: Ranges, ovens, steam ovens and grills - Methods for measuring performance.

15.2 Energy saving



The appliance has features which help you save energy during everyday cooking.

Make sure that the appliance door is closed when the appliance operates. Do not open the appliance door too often during cooking. Keep the door gasket clean and make sure it is well fixed in its position.

Use metal cookware to improve energy saving.

When possible, do not preheat the appliance before cooking.

Keep breaks between baking as short as possible when you prepare a few dishes at one time.

Cooking with fan
When possible, use the cooking functions with fan to save energy.

Residual heat
If a programme with the Duration or End Time selection is activated and the cooking time is longer than 30 min, the heating elements automatically turn off earlier in some appliance functions.

The fan and lamp continue to operate. When you turn off the appliance, the display shows the residual heat. You can use that heat to keep the food warm.

When the cooking duration is longer than 30 min, reduce the appliance temperature to minimum 3 - 10 min before the end of cooking. The residual heat inside the appliance will continue to cook.

Use the residual heat to warm up other dishes.

Keep food warm
Choose the lowest possible temperature setting to use residual heat and keep a meal warm. The residual heat indicator or temperature appears on the display.

Cooking with the lamp off
Turn off the lamp during cooking. Turn it on only when you need it.

Moist Fan Baking
Function designed to save energy during cooking.

When you use this function the lamp automatically turns off after 30 sec. You may turn on the lamp again but this action will reduce the expected energy savings.

Deactivating the display
You can turn off the display. Press and hold ⏲ and ∧ at the same time. To turn it on repeat this step.

16. ENVIRONMENTAL CONCERNS

Recycle materials with the symbol ♺. Put the packaging in relevant containers to recycle it. Help protect the environment and human health by recycling waste of electrical and electronic appliances. Do not dispose of appliances marked with the symbol with the household waste. Return the product to your local recycling facility or contact your municipal office.

CE



867355111-D-182022

electrolux.com