

EN3481MOW

EN Freezer-Fridge
GL Reoiteoir-Cuisneoir

USER MANUAL
LÁMHLEABHAR ÚSÁIDEORA

Electrolux

INDEX

BEFORE USING THE APPLIANCE 3
General warnings 3
Old and out-of-order fridges or freezer 5
Safety warnings 5
Installing and operating your fridge freezer 6
Before Using your Fridge 7
THE VARIOUS FUNCTION AND POSSIBILITIES 7
Information about New Generation Cooling Technology 7
Display and Control Panel 8
Operating your Fridge Freezer 8
Cooler Temperature Settings 8
Super Cool Mode 8
Economy Mode 9
Door Open Alarm Function 9
Temperature Adjustment Warnings 9
Accessories 10
Ice Tray 10
The Freezer Box 10
The Chiller Shelf 10
The Fresh Dial 11
Adjustable Door Shelf 11
Adjustable Glass Shelf 11
Natural Ion Tech 12
Maxi-fresh preserver 12
ARRANGING FOOD IN THE APPLIANCE 13
Refrigerator compartment 13
Freezer compartment 14
CLEANING AND MAINTENANCE 17
Defrosting 17
TRANSPORTATION AND CHANGING OF INSTALLATION POSITION 18
Repositioning the Door 18

BEFORE CALLING YOUR AFTER SALES SERVICE 19
Tips for saving energy 21
THE PARTS OF THE APPLIANCE AND THE COMPARTMENTS ... 22

The operating instructions apply to several models. Differences may therefore occur.

	
EN	Warning; Risk of fire / flammable materials
GL	Rabhadh; Riosca dóiteáin / ábhair so-lasta

PART - 1. BEFORE USING THE APPLIANCE

General warnings

⚠ **WARNING:** Keep ventilation openings, in the appliance enclosure or in the built-in structure, clear of obstruction.

⚠ **WARNING:** Do not use mechanical devices or other means to accelerate the defrosting process, other than those recommended by the manufacturer.

⚠ **WARNING:** Do not use electrical appliances inside the food storage compartments of the appliance, unless they are of the type recommended by the manufacturer.

⚠ **WARNING:** Do not damage the refrigerant circuit.

⚠ **WARNING:** When positioning the appliance, ensure the supply cord is not trapped or damaged.

⚠ **WARNING:** Do not locate multiple portable socket-outlets or portable power supplies at the rear of the appliance.

⚠ **WARNING:** In order to avoid any hazards resulting from the instability of the appliance, it must be fixed in accordance with the following instructions:

⚠ If your appliance uses R600a as a refrigerant (this information will be provided on the label of the cooler) you should take care during transportation and installation to prevent the cooler elements from being damaged. R600a is an environmentally friendly and natural gas, but it is explosive. In the event of a leak due to damage of the cooler elements, move your fridge away from open flames or heat sources and ventilate the room where the appliance is located for a few minutes.

- While carrying and positioning the fridge, do not damage the cooler gas circuit.
- Do not store explosive substances such as aerosol cans with a flammable propellant in this appliance.

- This appliance is intended to be used in household and domestic applications such as:
  - staff kitchen areas in shops, offices and other working environments.
  - farm houses and by clients in hotels, motels and other residential type environments.
  - bed and breakfast type environments;
  - catering and similar non-retail applications.
- If the socket does not match the refrigerator plug, it must be replaced by the manufacturer, a service agent or similarly qualified persons in order to avoid a hazard.
- A specially grounded plug has been connected to the power cable of your refrigerator. This plug should be used with a specially grounded socket of 16 amperes. If there is no such socket in your house, please have one installed by an authorised electrician.
- This appliance can be used by children aged from 8 years and above and persons with reduced physical, sensory or mental capabilities or lack of experience and knowledge if they have been given supervision or instruction concerning use of the appliance in a safe way and understand the hazards involved. Children shall not play with the appliance. Cleaning and user maintenance shall not be made by children without supervision.
- If the supply cord is damaged, it must be replaced by the manufacturer, an authorised service agent or similar qualified persons, in order to avoid a hazard.
- This appliance is not intended for use at altitudes exceeding 2000 m.

Old and out-of-order fridges or freezer

- If your old fridge or freezer has a lock, break or remove the lock before discarding it, because children may get trapped inside it and may cause an accident.
- Old fridges and freezers contain isolation material and refrigerant with CFC. Therefore, take care not to harm environment when you are discarding your old fridges.

Disposal of your old appliance



The symbol on the product or on its packaging indicates that this product may not be treated as household waste. Instead it shall be handed over to the applicable collection point for the recycling of electrical and electronic equipment. By ensuring this product is disposed of correctly, you will help prevent potential negative consequences for the environment and human health, which could otherwise be caused by inappropriate waste handling of this product. For more detailed information about recycling of this product, please contact your local city office, your household waste disposal service or the shop where you purchased the product.

Notes:

- Please read the instruction manual carefully before installing and using your appliance. We are not responsible for the damage occurred due to misuse.
- Follow all instructions on your appliance and instruction manual, and keep this manual in a safe place to resolve the problems that may occur in the future.
- This appliance is produced to be used in homes and it can only be used in domestic environments and for the specified purposes. It is not suitable for commercial or common use. Such use will cause the guarantee of the appliance to be cancelled and our company will not be responsible for the losses to be occurred.
- This appliance is produced to be used in houses and it is only suitable for cooling / storing foods. It is not suitable for commercial or common use and/or for storing substances except for food. Our company is not responsible for the losses to be occurred in the contrary case.

Safety warnings



- Do not connect your fridge freezer to the mains electricity supply using an extension lead.
- Do not use damaged, torn or old plugs.
- Do not pull, bend or damage the cord.



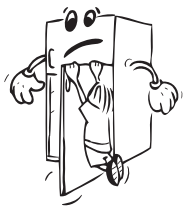

- Do not use plug adapter.
- This appliance is designed for use by adults. Do not allow children to play with the appliance or hang off the door.
- Never touch the power cord/plug with wet hands. This may cause a short circuit or electric shock.



- Do not place glass bottles or cans in the ice-making compartment as they will burst when the contents freeze.



- Do not place explosive or flammable material in your fridge. Place drinks with high alcohol content vertically in the fridge compartment and make sure their tops are tightly closed.
- When removing ice from the ice-making compartment, do not touch it. Ice may cause frost burns and/or cuts.



- Do not touch frozen goods with wet hands. Do not eat ice-cream or ice cubes immediately after they are removed from the ice-making compartment.
- Do not re-freeze thawed frozen food. This may cause health issues such as food poisoning.

Installing and operating your fridge freezer

Before using your fridge freezer for the first time, please pay attention to the following points:

- The operating voltage for your fridge freezer is 220-240 V at 50Hz.
- The plug must be accessible after installation.
- Your fridge freezer may have an odour when it is operated for the first time. This is normal and the odour will fade when your fridge freezer starts to cool.
- Before connecting your fridge freezer, ensure that the information on the data plate (voltage and connected load) matches that of the mains electricity supply. If in doubt, consult a qualified electrician.
- Insert the plug into a socket with an efficient ground connection. If the socket has no ground contact or the plug does not match, we recommend you consult a qualified electrician for assistance.
- The appliance must be connected with a properly installed fused socket. The power supply (AC) and voltage at the operating point must match with the details on the name plate of the appliance (the name plate is located on the inside left of the appliance).
- We do not accept responsibility for any damages that occur due to ungrounded usage.
- Place your fridge freezer where it will not be exposed to direct sunlight.
- Your fridge freezer must never be used outdoors or exposed to rain.
- Your appliance must be at least 50 cm away from stoves, gas ovens and heater cores, and at least 5 cm away from electrical ovens.
- If your fridge freezer is placed next to a deep freezer, there must be at least 2 cm between them to prevent humidity forming on the outer surface.
- Do not cover the body or top of fridge freezer with lace. This will affect the performance of your fridge freezer.
- Clearance of at least 150 mm is required at the top of your appliance. Do not place anything on top of your appliance.



- Do not place heavy items on the appliance.
- Use the adjustable front legs to make sure your appliance is level and stable. You can adjust the legs by turning them in either direction. This must be done before placing food in the appliance.
- Clean the appliance thoroughly before use (see Cleaning and Maintenance).

- Before using your fridge freezer, wipe all parts with a solution of warm water and a teaspoon of sodium bicarbonate. Then, rinse with clean water and dry. Return all parts to the fridge freezer after cleaning.
- Install the two plastic distance guides (the parts on the black vanes -condenser- at the rear) by turning it 90° (as shown in the figure) to prevent the condenser from touching the wall.
- The distance between the appliance and back wall must be a maximum of 75 mm.

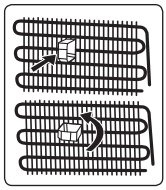

Before Using your Fridge

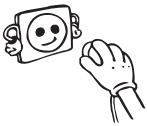

- When using your fridge for the first time, or after transportation, keep it in an upright position for at least 3 hours before plugging into the mains. This allows efficient operation and prevents damage to the compressor.
- Your fridge may have a smell when it is operated for the first time. This is normal and the smell will fade away when your fridge starts to cool.

PART - 2. THE VARIOUS FUNCTION AND POSSIBILITIES

Information about New Generation Cooling Technology

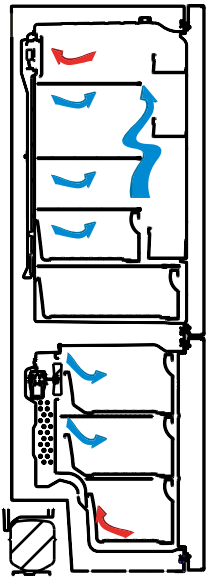

Fridges with new-generation cooling technology have a different operating system to static fridges. Other (static) fridges may experience a build up of ice in the freezer compartment due to door openings and humidity in the food. In such fridges, regular defrosting is required; the fridge must be switched off, the frozen food moved to a suitable container and the ice which has formed in the freezer compartment removed.

In fridges with new-generation cooling technology, a fan blows dry cold air evenly throughout the fridge and freezer compartments. The cold air cools your food evenly and uniformly, preventing humidity and ice build-up.

In the refrigerator compartment, air blown by the fan, located at the top of the refrigerator compartment, is cooled while passing through the gap behind the air duct. At the same time, the air is blown out through the holes in the air duct, evenly spreading cool air throughout the refrigerator compartment.

There is no air passage between the freezer and refrigerator compartments, therefore preventing the mixing of odours.

As a result, your fridge, with new-generation cooling technology, provides you with ease of use as well as a huge volume and aesthetic appearance.

Display and Control Panel

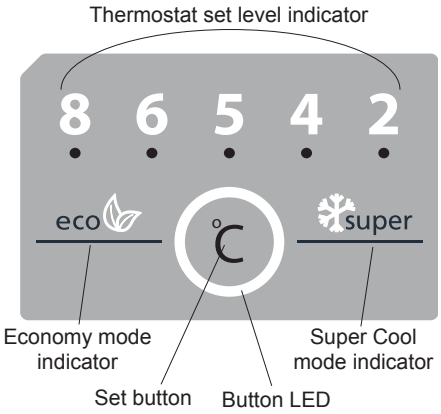

Operating your Fridge Freezer

Cooler Temperature Settings

- Initial temperature value for cooler setting indicator is 6 °C.
- Press set button once, the set value will start to blink.
- If you keep pressing set button, lower temperatures will be selected. (8, 6, 5, 4, 2, super and eco)
- If no button is pressed for 1 second, your choice will be set, it will blink 3 times. Buzzer will sound.
- The temperature value selected before super cool mode or economy mode is activated will remain the same when the mode is over or cancelled. The appliance continues to operate with this temperature value.

Super Cool Mode

When Would It Be Used?

- To cooling huge quantities of food.
- To cooling fast food.
- To cooling food quickly.
- To store seasonal food for a long time.

How Would It Be Used?

Press set button until super cool symbol will be seen on the screen. Buzzer will sound. Mode will be set.

During This Mode:

- Economy mode can not be selected.
- Super cool mode can be cancelled by pressing set button again until the super cool symbol disappears.

Economy Mode

How Would It Be Used?

Press set button until eco symbol will be seen on the screen. Buzzer will sound. Mode will be set.

During This Mode:

- Super cool can be selected. Economy mode is automatically cancelled and the selected mode is activated.
- Eco mode can be cancelled by pressing set button again until the economy symbol disappears.

Door Open Alarm Function

If cooler or freezer door is opened more than 2 minutes, appliance sounds 'beep beep'.

Temperature Adjustment Warnings

- It is not recommended that you operate your fridge in environments colder than 10°C in terms of its efficiency.
- Do not start another adjustment while you are already making an adjustment.
- Temperature adjustments should be made according to the frequency of door openings, the quantity of food kept inside the fridge and the ambient temperature in the location of your fridge.
- In order to allow your fridge to reach the operating temperature after being connected to mains, do not open the doors frequently or place large quantities of food in the fridge. Please note that, depending on the ambient temperature, it may take 24 hours for your fridge to reach the operating temperature.
- A 5 minute delay function is applied to prevent damage to the compressor of your fridge when connecting or disconnecting to mains, or when an energy breakdown occurs. Your fridge will begin to operate normally after 5 minutes.
- Your appliance is designed to operate in the ambient temperature (T/SN = 10°C - 43°C) intervals stated in the standards, according to the climate class displayed on the information label. We do not recommend operating your appliance out of the stated temperature limits in terms of cooling effectiveness.

Climate class	Ambient (°C)
T	16 to 43 (°C)
ST	16 to 38 (°C)
N	16 to 32 (°C)
SN	10 to 32 (°C)

Important installation instructions

This appliance is designed to work in difficult climate conditions (up to 43 degrees C or 110 degrees F) and is powered with 'Freezer Shield' technology which ensures that the frozen food in the freezer will not defrost even if the ambient temperature falls as low as -15 °C. So you may then install your appliance in an unheated room without having to worry about frozen food in the freezer being spoilt. When the ambient temperature returns to normal, you may continue using the appliance as usual.

Accessories

Ice Tray

- Fill the ice tray with water and place in the freezer compartment.
- After the water has completely frozen, you can twist the tray as shown below to remove the ice cubes.

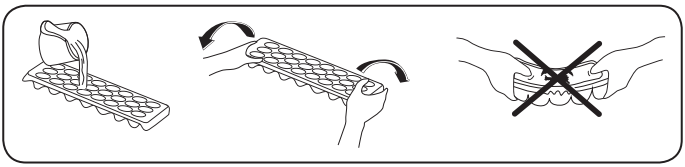

The Freezer Box

The freezer box allows food to be accessed more easily.

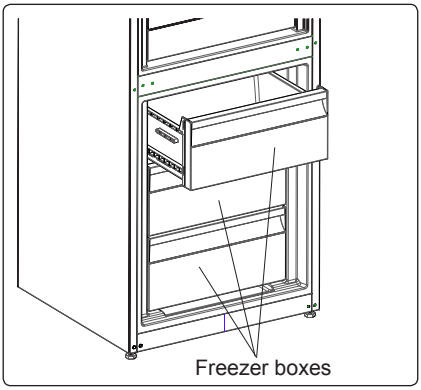

Removing the freezer box:

- Pull the box out as far as possible
- Pull the front of the box up and out

⚠ Carry out the opposite of this operation when refitting the sliding compartment.

Always keep hold of the handle of the box while removing it.

The Chiller Shelf *(In some models)*

Keeping food in the Chiller compartment, instead of the freezer or refrigerator compartments, allows food to retain freshness and flavour for longer, while preserving its fresh appearance. When the Chiller tray becomes dirty, remove it and wash with water.

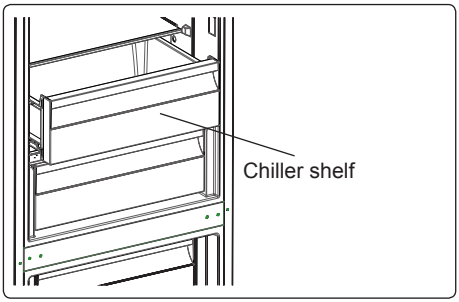

(Water freezes at 0°C, but food containing salt or sugar freezes at temperatures lower than this).

The Chiller compartment is usually used for storing foods such as raw fish, lightly pickled food, rice, and so on.

⚠ **Do not put food you want to freeze or ice trays (to make ice) in the Chiller compartment.**

To remove the Chiller Shelf:

- Pull the chiller shelf towards you by sliding it on the rails.
- Pull the chiller shelf up from the rail and remove it from the fridge.

Notes:

- Set a temperature to 2° - the temperature inside chiller compartment will be lower than 0°.
- Set a temperature to 4° - most suitable for fish and meat.
- Set a temperature to 5° - most suitable for fresh food other than fish and meat.
- Set a temperature to higher than 5° - the temperature inside chiller compartment will be higher than 3°.

The Fresh Dial ***(In some models)***

If the crisper is full, the fresh dial located in front of the crisper should be opened. This allows the air in the crisper and the humidity rate to be controlled, to increase the life of food within.

The dial, located behind the shelf, must be opened if any condensation is seen on the glass shelf.

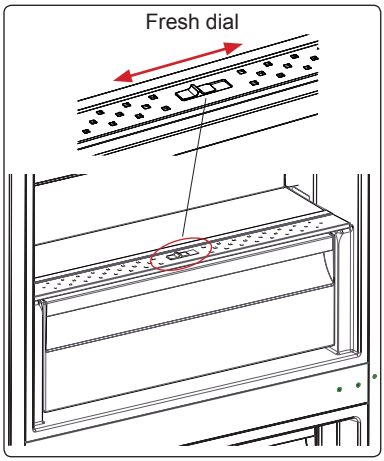

Adjustable Door Shelf ***(In some models)***

Six different height adjustments can be made to provide storage areas that you need by adjustable door shelf.

To change the position of adjustable door shelf ;

Hold the bottom of the shelf and pull the buttons on the side of the door shelf direction of arrow. (Fig.1)

Position door shelf the height you need by moving up and down. After you get the position that you want the door shelf, release the buttons on the side of the door shelf (Fig.2) Before releasing the door shelf, move up down and make sure the door shelf is fixed.

Note: Before moving door shelf is loaded, you must hold the shelf by supporting the bottom. Otherwise, door shelf could fall off the rails due to the weight. So damage may occur on the door shelf or rails.

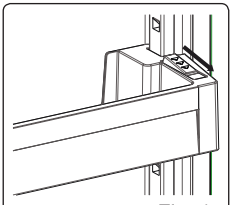
Fig. 1

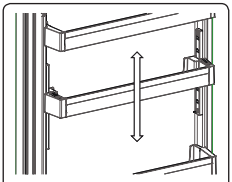
Fig. 2

Adjustable Glass Shelf ***(In some models)***

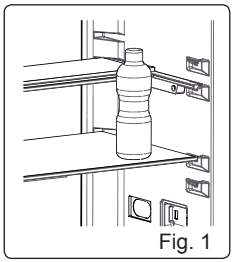
Fig. 1

Adjustable glass shelf mechanism provides higher storage spaces with a simple movement. To cover the glass shelf, push it.

You can load your food as you want in the resulting extra space. To bring the shelf in its original position, pull it toward you.

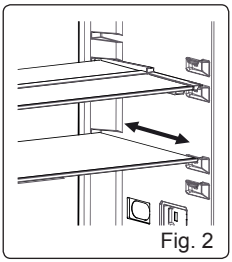
Fig. 2

Natural Ion Tech ***(In some models)***

Natural Ion Tech spreads negative ions which neutralize particles of unpleasant smell and dust in the air.

By removing these particles from the air in the refrigerator, Natural Ion Tech improves air quality and eliminates odours.

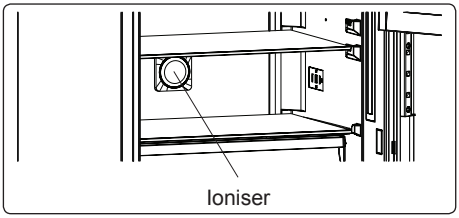

- This feature is optional. It may not exist on your product.
- The location of your ioniser device may vary from product to product.

Maxi-fresh preserver ***(In some models)***

Maxi Fresh Preserver technology helps to remove ethylene gas (a bioproduct released naturally from fresh foods) and unpleasant odors from the crisper. In this way, food stays fresh for a longer time.

- Maxi Fresh Preserver must be cleaned once in a year. The filter should be waited for 2 hours at 65°C in a oven.
- To clean the filter, please remove the back cover of the filter box by pulling it in the direction of the arrow.
- The filter should not be washed with water or any detergent.

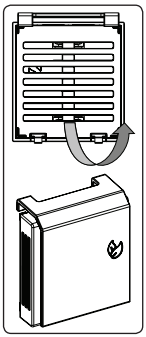

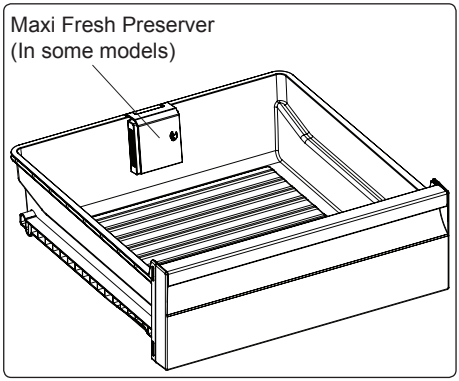

Visual and text descriptions in the accessories section may vary according to the model of your appliance.

PART - 3. ARRANGING FOOD IN THE APPLIANCE

For normal operating conditions, set the temperature +4 or +6 °C.

Refrigerator compartment

- To reduce humidity and avoid the consequent formation of frost, always store liquids in sealed containers in the refrigerator. Frost tends to concentrate in the coldest parts of the evaporating liquid and, in time, your appliance will require more frequent defrosting.
- Never place warm food in the refrigerator. Warm food should be allowed to cool at room temperature and should be arranged to ensure adequate air circulation in the refrigerator compartment.
- Make sure no items are in direct contact with the rear wall of the appliance as frost will develop and packaging will stick to it. Do not open the refrigerator door frequently.
- We recommend that meat and clean fish are loosely wrapped and stored on the glass shelf just above the vegetable bin where the air is cooler, as this provides the best storage conditions.
- Store loose fruit and vegetable items in the crisper containers.
- Store loose fruit and vegetables in the crisper.
- Storing fruit and vegetables separately helps prevent ethylene-sensitive vegetables (green leaves, broccoli, carrot, etc.) being affected by ethylene-releaser fruits (banana, peach, apricot, fig etc.).
- Do not put wet vegetables into the refrigerator.
- Storage time for all food products depends on the initial quality of the food and an uninterrupted refrigeration cycle before refrigerator storage.
- To avoid cross-contamination do not store meat products with fruit and vegetables. Water leaking from meat may contaminate other products in the refrigerator. You should package meat products and clean any leakages on the shelves.
- Do not put food in front of the air flow passage.
- Consume packaged foods before the recommended expiry date.

NOTE: Potatoes, onions and garlic should not be stored in the refrigerator.

The table below is a quick guide to show you the most efficient way to store the major food groups in your refrigerator compartment.

Food	Maximum storage time	How and where to store
Vegetables and fruits	1 week	Vegetable bin
Meat and fish	2 - 3 Days	Wrap in plastic foil, bags, or in a meat container and store on the glass shelf
Fresh cheese	3 - 4 Days	On the designated door shelf
Butter and margarine	1 week	On the designated door shelf
Bottled products e.g. milk and yoghurt	Until the expiry date recommended by the producer	On the designated door shelf
Eggs	1 month	On the designated egg shelf
Cooked food		All shelves

Freezer compartment

- The freezer is used for storing frozen food, freezing fresh food, and making ice cubes.
- To use the maximum capacity of the freezer compartment, use the glass shelves for the upper and middle section, and use the lower basket for the bottom section.
- Use the fast freezing shelf to freeze home cooking (and any other food which needs to be frozen quickly) more quickly because of the freezing shelf's greater freezing power. Fast freezing shelf is the bottom drawer of the freezer compartment.
- For freezing fresh food; wrap and seal fresh food properly, that is the packaging should be air tight and shouldn't leak. Special freezer bags, aluminum foil polythene bags and plastic containers are ideal.
- Do not store fresh food next to frozen food as it can thaw the frozen food.
- Before freezing fresh food, divide it into portions that can be consumed in one sitting.
- Consume thawed frozen food within a short period of time after defrosting
- Never place warm food in the freezer compartment as it will thaw the frozen food.
- Always follow the manufacturer's instructions on food packaging when storing frozen food. If no information is provided food, should not be stored for more than 3 months from the date of purchase.
- When purchasing frozen food, make sure that it has been stored under appropriate conditions and that the packaging is not damaged.
- Frozen food should be transported in appropriate containers and placed in the freezer as soon as possible.
- Do not purchase frozen food if the packaging shows signs of humidity and abnormal swelling. It is probable that it has been stored at an unsuitable temperature and that the contents have deteriorated.
- The storage life of frozen food depends on the room temperature, the thermostat setting, how often the door is opened, the type of food, and the length of time required to transport the product from the shop to your home. Always follow the instructions printed on the packaging and never exceed the maximum storage life indicated.
- The maximum amount of fresh food (in kg) that can be frozen in 24 hours is indicated on the appliance label.
- For optimum appliance performance to reach maximum freezing capacity, set the refrigerator at 4 °C for 24 hours before placing fresh food into the freezer.
- After placing fresh food into the freezer, change the setting to 2 °C for 24 hours is generally sufficient. After 24 hours, you can reduce the setting if required.

NOTE: If you attempt to open the freezer door immediately after closing it, you will find that it will not open easily. This is normal. Once equilibrium has been reached, the door will open easily.

Important note:

- Never refreeze thawed frozen food.
- The taste of some spices found in cooked dishes (anise, basilica, watercress, vinegar, assorted spices, ginger, garlic, onion, mustard, thyme, marjoram, black pepper, etc.) changes and they assume a strong taste when they are stored for a long period of time. Therefore, add small amounts of spices to food to be frozen, or the desired spice should be added after the food has thawed.

- The storage time of food is dependent on the type of oil used. Suitable oils are margarine, calf fat, olive oil and butter. Unsuitable oils are peanut oil and pig fat.
- Food in liquid form should be frozen in plastic cups and other food should be frozen in plastic folios or bags.

The table below is a quick guide to show you the most efficient way to store the major food groups in your freezer compartment.

Meat and fish	Preparation	Maximum storage time (months)
Steak	Wrap in foil	6 - 8
Lamb meat	Wrap in foil	6 - 8
Veal roast	Wrap in foil	6 - 8
Veal cubes	In small pieces	6 - 8
Lamb cubes	In pieces	4 - 8
Minced meat	In packaging without using spices	1 - 3
Giblets (pieces)	In pieces	1 - 3
Bologna sausage/ salami	Should be kept packaged even if it has a membrane	
Chicken and turkey	Wrap in foil	4 - 6
Goose and duck	Wrap in foil	4 - 6
Deer, rabbit, wild boar	In 2.5 kg portions or as fillets	6 - 8
Freshwater fish (Salmon, Carp, Crane, Catfish)	After cleaning the bowels and scales of the fish, wash and dry it. If necessary, remove the tail and head.	2
Lean fish (Bass, Turbot, Flounder)		4
Fatty fishes (Tuna, Mackerel, Bluefish, Anchovy)		2 - 4
Shellfish	Clean and in a bag	4 - 6
Caviar	In its packaging, or in an aluminium or plastic container	2 - 3
Snails	In salty water, or in an aluminium or plastic container	3

NOTE: Thawed frozen meat should be cooked as fresh meat. If the meat is not cooked after defrosting, it must not be re-frozen.

Vegetables and Fruits	Preparation	Maximum storage time (months)
String beans and beans	Wash, cut into small pieces and boil in water	10 - 13
Beans	Hull, wash and boil in water	12

Vegetables and Fruits	Preparation	Maximum storage time (months)
Cabbage	Clean and boil in water	6 - 8
Carrot	Clean, cut into slices and boil in water	12
Pepper	Cut the stem, cut into two pieces, remove the core and boil in water	8 - 10
Spinach	Wash and boil in water	6 - 9
Cauliflower	Remove the leaves, cut the heart into pieces and leave it in water with a little lemon juice for a while	10 - 12
Eggplant	Cut into pieces of 2cm after washing	10 - 12
Corn	Clean and pack with its stem or as sweet corn	12
Apple and pear	Peel and slice	8 - 10
Apricot and Peach	Cut into two pieces and remove the stone	4 - 6
Strawberry and Blackberry	Wash and hull	8 - 12
Cooked fruits	Add 10 % of sugar to the container	12
Plum, cherry, sourberry	Wash and hull the stems	8 - 12

	Maximum storage time (months)	Thawing time at room temperature (hours)	Thawing time in oven (minutes)
Bread	4 - 6	2 - 3	4-5 (220-225 °C)
Biscuits	3 - 6	1 - 1,5	5-8 (190-200 °C)
Pastry	1 - 3	2 - 3	5-10 (200-225 °C)
Pie	1 - 1,5	3 - 4	5-8 (190-200 °C)
Phyllo dough	2 - 3	1 - 1,5	5-8 (190-200 °C)
Pizza	2 - 3	2 - 4	15-20 (200 °C)

Dairy products	Preparation	Maximum storage time (months)	Storage conditions
Packet (Homogenized) Milk	In its own packet	2 - 3	Pure Milk – in its own packet
Cheese - excluding white cheese	In slices	6 - 8	Original packaging may be used for short-term storage. Keep wrapped in foil for longer periods.
Butter, margarine	In its packaging	6	

PART - 4. CLEANING AND MAINTENANCE

Disconnect the unit from the power supply before cleaning.



Do not wash your appliance by pouring water on it.

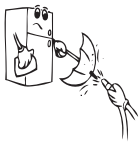

Do not use abrasive products, detergents or soaps for cleaning the appliance. After washing, rinse with clean water and dry carefully. When you have finished cleaning, reconnect the plug to the mains supply with dry hands.

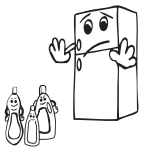

- Make sure that no water enters the lamp housing and other electrical components.
- The appliance should be cleaned regularly using a solution of bicarbonate of soda and lukewarm water.

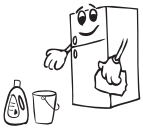



- Clean the accessories separately by hand with soap and water. Do not wash accessories in a dish washer.



- Clean the condenser with a brush at least twice a year. This will help you to save on energy costs and increase productivity.

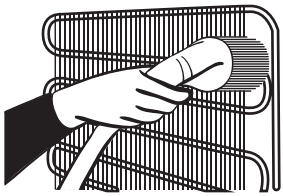

The power supply must be disconnected during cleaning.

Defrosting

Your refrigerator performs automatic defrosting. The water formed as a result of defrosting passes through the water collection spout, flows into the vaporisation container behind your refrigerator and evaporates there.

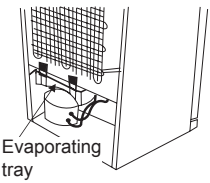

- Make sure you have disconnected the plug of your refrigerator before cleaning the vaporisation container.
- Remove the vaporisation container from its position by removing the screws as indicated. Clean it with soapy water at specific time intervals. This will prevent odours from forming.

Replacing LED Lighting

To replace any of the LEDs, please contact the nearest Authorised Service Centre.

Note: The numbers and location of the LED strips may change according to the model.

PART - 5. TRANSPORTATION AND CHANGING OF INSTALLATION POSITION

Transportation and Changing Positioning

- The original packaging and foam may be kept for re-transportation (optional).
- Fasten your appliance with thick packaging, bands or strong cords and follow the instructions for transportation on the packaging.
- Remove all movable parts (shelves, accessories, vegetable bins, and so on) or fix them into the appliance against shocks using bands when re-positioning or transporting.

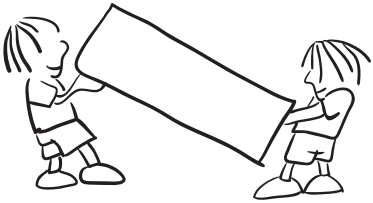

⚠ ***Always carry your appliance in the upright position.***

Repositioning the Door

- It is not possible to change the opening direction of your appliance door if door handles are installed on the front surface of the appliance door.
- It is possible to change the opening direction of the door on models without handles.
- If the door-opening direction of your appliance can be changed, contact the nearest Authorised Service Centre to change the opening direction.

PART - 6. BEFORE CALLING YOUR AFTER SALES SERVICE

Errors

Your fridge will warn you if the temperatures for the cooler and freezer are at improper levels or if a problem occurs with the appliance. In this case, LED around the button will blink and buzzer will sound beep.

MEANING	WHY	WHAT TO DO
"Failure" Warning	There is/are some part(s) out of order or there is a failure in the cooling process.	Call a service agent for assistance as soon as possible.

If you are experiencing a problem with your refrigerator, please check the following before contacting the after-sales service.

Your refrigerator does not operate

Check if:

- Your fridge is plugged in and switched on
- The fuse has blown
- Is the temperature adjustment right?
- The socket is faulty. To check this, plug another working appliance into the same socket.

Your refrigerator is performing poorly

Check if:

- Is the temperature adjustment right?
- Is the door of your fridge opened frequently and left open for a long while?
- The appliance is overloaded
- The doors are closed properly
- Did you put a dish or food on your fridge so that it contacts the rear wall of your fridge so as to prevent the air circulation?
- Is your fridge filled excessively?
- There is an adequate distance between the appliance and surrounding walls
- Is the ambient temperature within the range of values specified in the operating manual?

Your refrigerator is operating noisily

The following noises can be heard during normal operation of the appliance.

Cracking (ice cracking) noise occurs:

- During automatic defrosting.
- When the appliance is cooled or warmed (due to expansion of appliance material).

Clicking noise occurs: When the thermostat switches the compressor on/off.

Motor noise: Indicates the compressor is operating normally. The compressor may cause more noise for a short time when it is first activated.

Bubbling noise and splashing occurs: Due to the flow of the refrigerant in the tubes of the system.

Water flowing noise occurs: Due to water flowing to the evaporation container. This noise is normal during defrosting.

Air blowing noise occurs: During normal operation of the system due to the circulation of air.

There is a build-up of humidity inside the fridge

Check if:

- All food is packed properly. Containers must be dry before being placed in the fridge.
- The fridge doors are opened frequently. Humidity of the room will enter the fridge each time the doors are opened. Humidity increases faster if the doors are opened frequently, especially if the humidity of the room is high.
- There is a build-up of water droplets on the rear wall. This is normal after automatic defrosting (in Static Models).

The doors are not opening or closing properly

Check if:

- There is food or packaging preventing the door from closing
- The door compartments, shelves and drawers are placed properly
- The door gaskets are broken or torn
- Your fridge is level.

The edges of the fridge in contact with the door joint are warm

Especially during summer (warm weather), the surfaces in contact with the door joint may become warmer during operation of the compressor. This is normal.

Important Notes:

- In the case of a power failure, or if the appliance is unplugged and plugged in again, the gas in the cooling system of your refrigerator will destabilise, causing the compressor protective thermal element to open. Your refrigerator will start to operate normally after 5 minutes.
- If the appliance will not be used for a long period of time (such as during holidays), disconnect the plug. Defrost and clean the refrigerator, leaving the door open to prevent the formation of mildew and odour.
- If the problem persists after you have followed all the instructions above, please consult the nearest Authorised Service Centre.
- This appliance is designed for domestic use and for the stated purposes only. It is not suitable for commercial or common use. If the consumer uses the appliance in a way that does not comply with these instructions, we emphasise that the manufacturer and the dealer will not be responsible for any repair or failure within the guarantee period.

Tips for saving energy

1. Install the appliance in a cool, well-ventilated room, but not in direct sunlight and not near a heat source (such as a radiator or oven) otherwise an insulating plate should be used.
2. Allow warm food and drinks to cool before placing them inside the appliance.
3. Place thawing food in the refrigerator compartment. The low temperature of the frozen food will help cool the refrigerator compartment while the food is thawing. This will save energy. Frozen food left to thaw outside of the appliance will result in a waste of energy.
4. Drinks or other liquids should be covered when inside the appliance. If left uncovered, the humidity inside the appliance will increase, therefore the appliance uses more energy. Keeping drinks and other liquids covered helps preserve their smell and taste.
5. Avoid keeping the doors open for long periods and opening the doors too frequently as warm air will enter the appliance and cause the compressor to switch on unnecessarily often.
6. Keep the covers of the different temperature compartments (such as the crisper and chiller) closed.
7. The door gasket must be clean and pliable. Replace gaskets if worn.

PART - 7. THE PARTS OF THE APPLIANCE AND THE COMPARTMENTS

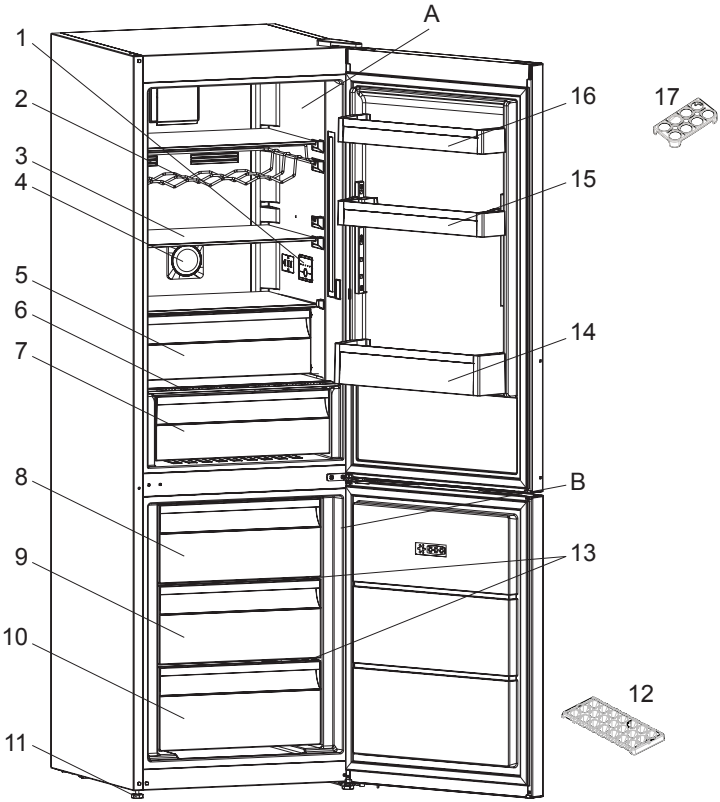

This presentation is only for information about the parts of the appliance. Parts may vary according to the appliance model.

A) Refrigerator compartment

B) Freezer compartment

1) Thermostat box / Interior display
2) Wine rack *
3) Refrigerator shelves
4) Ioniser *
5) Chiller *
6) Crisper cover
7) Crisper
8) Freezer upper basket
9) Freezer midle basket
10) Freezer bottom basket
11) Levelling feet
12) Ice box tray
13) Freezer glass shelves *
14) Bottle shelf
15) Adjustable door shelf * / door shelf
16) Door shelf
17) Egg holder

** In some models*

Innéacs

SULA nÚSÁIDTEAR AN GLÉAS SEO 24
Rabhaidh Ginearálta 24
Sean-chuisneoirí agus As Ord 26
Rabhaidh Sábháilteachta 26
Do Chuisneoir-Reoiteoir a Shuiteáil is a Oibriú 27
Sula nÚsáidtear do Chuisneoir-Reoiteoir 28
NA FEIDHMEANNA AGUS GNÉITHE DIFRIÚLA 29
Faisnéis maidir leis an Teicneolaíocht Fuaraithe Nua-Aoise 29
Taispeáint agus painéal rialúcháin 30
Do Chuisneoir-Reoiteoir a Oibriú 30
Socruithe teochta an fhuaraitheora 30
Modh an-fhuar 30
Modh coigilte 31
Rabhaidh faoi Choigeartuithe Teochta 32
Treoracha suiteála tábhachtacha 32
Oiriúintí 33
Bosca Reoiteora 33
Seilf Fhuaraithe 34
Rialaitheoir Taise 34
Seilf In-choigeartaithe an Dorais 35
Seilf Ghloine in-choigeartaithe 35
Teic Iain Nádúrtha / Ianaitheoir 36
Caomhnóir Maxi-fresh 36
AG EAGRÚ BIA SA GHLÉAS 37
Urrann an Chuisneora 37
Urrann an Reoiteora 38
GLANADH AGUS COTHABHÁIL 43
Díreo 44
IOMPAR AGUS SOCRÚ SUITEÁLA A ATHRÚ 45
An Doras a ath-shuí 45
SULA LABHRAÍONN TÚ LEIS AN SEIRBHÍS IARDHÍOLTA .. 46
LEIDEANNA COIGILTE CUMHACHTA 49
CODANNA DEN GHLÉAS AGUS URRAINN 50

CUID - 1. SULA nÚSÁIDTEAR AN GLÉAS SEO

Rabhaidh Ginearálta

RABHADH: Coinnigh poill aeraithe atá sa ghléas nó sa struchtúr ionsuite saor

RABHADH: ná húsáid gléasanna meicniúla nó bealaí eile chun luas a chur leis an bpróiseas díreo, seachas iad sin a mholann an déantóir.

RABHADH: Ná húsáid gléasanna leictreacha laistigh d'urrainn stórála bia sa ghléas, seachas má mholann an déantóir.

RABHADH: Ná cuir damáiste ar an gciorcad cuisneáin.

RABHADH: Le linn an gléas a shuí, cinntigh nach bhfuil aon bhac nó damáiste ar an gcorda fothaithe.

RABHADH: Ná cuir an iomarca asraon soicéid soghluaiste nó fothú cumhachta soghluaiste ar chúl an ghléis.

RABHADH: Chun aon ghuais dóiteáin a chosc mar thoradh ar éagobhsaíocht an ghléis, ní mór é a dhaingniú i gcomhréir leis na treoracha a leanas:

Má úsáideann do ghléas R600a mar chuisneán (tabharfar an t-eolas seo ar lipéad an fhuaraitheora), is gá duit bheith cúramach le linn iompair agus suiteála chun nach dtiocfaidh damáiste ar chomhpháirteanna an fhuaraitheora. Is gás nádúrtha, neamhdhíobhálach don chomhshaol é R600a, ach bíonn sé pléascach. I gcás sceite mar gheall ar dhamáiste do na chomhpháirteanna fuaraithe, bog an cuisneoir amach ó aon tine nó foinsí teasa agus aeraigh an seomra ina bhfuil an gléas ar feadh cúpla nóiméad.

- Le linn an cuisneoir a iompar agus a shuí, ná cuir damáiste ar an gciorcad gáis fuaraithe.
- Ná coinnigh substaintí pléascacha amhail cannaí aerasóil le tiomántán so-lasta sa ghléas seo.

- Tá an gléas seo beartaithe i gcomhair úsáide an tí, lena n-áirítear:
  - limistéir foirne na cistine i siopaí, oifigí agus timpeallachtaí oibre eile.
  - tithe feirme agus le cliaint in óstáin, móstáin agus timpeallachtaí den chineál cónaithe eile.
  - timpeallachtaí den chineál leaba is bricfeasta;
  - úsáid i gcomhair lónadóireachta agus neamh-thráchtála eile.
- Mura meaitseálann an soicéad plug an chuisneora, is gá dó bheith athchurtha ag an ndéantóir, gníomhaire seirbhíse nó daoine cáilithe eile chun guais a chosc.
- Tá plug talmhaithe go speisialta ceangailte le sreang chumhachta an chuisneora. Ba chóir an plug sin a úsáid le soicéad talmhaithe go speisialta ar 16 amperes. Mura bhfuil soicéad dá leithéid sin i do theach, ba chóir duit ceann a fháil suiteáilte ag leictreoir údaraithe.
- Is féidir leis an ngléas seo bheith úsáidte ag páistí 8 mbliana d'aois nó níos sine agus daoine a bhfuil cumais fisiceacha, céadfacha nó meabhair íslithe acu nó easpa taithí agus oiliúint má thugtar maoisreacht nó treoracha dóibh maidir le húsáid an ghléis ar bhealach sábháilte agus tuigeann siad na guaiseanna a bhaineann leis. Ba chóir do pháistí gan imirt leis an ngléas. Ba chóir do pháistí gan chothabháil glanta agus úsáideora a dhéanamh gan mhaoirseacht.
- Má bhíonn damáiste ar an gcorda fothaithe, is gá dó bheith athchurtha ag an ndéantóir, gníomhaire seirbhíse nó daoine cáilithe eile chun guais a chosc.
- Níl an gléas seo beartaithe le húsáid ag airde níos mó ná 2000 m.

Sean-chuisneoirí agus As Ord

- Má bhíonn glas ag do chuisneoir, bris nó bain an glas sula ndéanann tú diúscairt ar an ngléas, ós féidir le páistí bheith gafa istigh ann agus timpiste tarlú.



- Seans go bhfuil ábhair inslithe agus fuaraithe ag sean-chuisneoirí agus sean-reoiteoirí le CFC nó HFC. Dá bhrí sin, bí cúramach gan dochar a dhéanamh don chomhshaol le linn do shean-chuisneoir a dhiúscairt.

Labhair le d'údarás áitiúil maidir le diúscairt an WEEE ar mhaithe le athúsáide, athchúrsála agus athshlánaithe.

Nótaí:

- Léigh an lámhleabhar treoracha go cúramach sula ndéanann tú an gléas a shuiteáil nó a úsáid. ***Ní ghlacaimid freagracht as damáiste a tharlaíonn mar gheall ar mhí-úsáid.***
- Lean na treoracha go léir ar lámhleabhar treoracha do ghléis, agus coinnigh an lámhleabhar seo in áit shábháilte chun dul i ngleic le haon fhadhb ar féidir tarlú.
- Déantar an gléas seo le húsáid i dtithe cónaithe. Ní féidir leat ach é a úsáid i dtimpeallacht chónaithe agus chun na cuspóra sonraithe. Níl sé oiriúnach don úsáid thráchtála nó comónta. Má úsáidtear é sa slí sin, cuirfear an barántas ar ceal agus ní bheidh ár gcomhlacht freagracht as caillteanais a thagann as sin.
- Déantar an gléas seo le húsáid i dtithe cónaithe amháin agus tá sé oiriúnach i gcomhair bia a fhuarú / choimeád. Níl sé oiriúnach don úsáid thráchtála nó comónta agus/nó chun substaintí eile nach bia iad a choimeád ann. Ní ghlacann ár gcomhlacht freagracht as caillteanais a thagann as neamhaird air sin.

Rabhaidh Sábháilteachta



- Ná ceangail do Chuisneoir Reoiteora leis an bhfothú leictreachais sa phríomhlíne le sreang sínte.
- Ná plugáil isteach plug a bhfuil damáiste air, briste nó ró-shean.
- Ná tarraing, ná lúb agus ná cuir damáiste ar an gcorda sin.



- Tá an gléas seo deartha i gcomhair úsáide ag daoine fásta, ná lig do pháistí imirt leis an ngléas agus ná lig dóibh crochadh ar an ndoras.

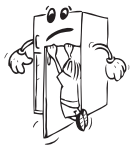

- Ná tadhaill riamh an corda/plug cumhachta le lámha fliucha, ós rud é gur féidir leis sin gearrchiorcad nó turraing leictreach a spreagadh.
- Ná cuir buidéil gloine nó cannaí dí ar an urrann déanta oighir, ós rud é gur féidir leo pléascadh nuair a reoann an leacht istigh.



- Ná cuir ábhair pléascacha nó so-lasta sa chuisneoir. Cuir deochanna a bhfuil go leor alcól acu go hingearach san urrann cuisneora agus cinntigh go bhfuil an barr dúnta go daingean.
- Le linn oighear a bhaint ón urrann déanta oighir, ná tadhaill air. Is féidir le hoighear dó seaca agus/nó gearradh a chur ort.



- Ná tadhaill ar na nithe reoite le do lámha fliucha. Ná hith uachtar reoite nó ciúib oighir láithreach i ndiaidh duit iad a bhaint ón urrann déanta oighir.
- Ná hath-reo nithe reoite tar éis dóibh leá. Is féidir leis sin fadhbanna sláinte a chur ort, amhail nimhiú bia.



- Ná clúdaigh corp nó barr an chuisneora le lása. Imríonn sin tionchar ar fheidhmíocht an chuisneora.
- Daingnigh aon oiriúintí sa chuisneoir le linn iompair chun damáiste ar na hoiriúintí a chosc.

Do Chuisneoir-Reoiteoir a Shuiteáil is a Oibriú

Sula n-úsáidtear an cuisneoir, ní mór aird a thabhairt ar na pointí a leanas:

- Is é voltas oibriúcháin do chuisneora ná 220-240V ag 50Hz.
- Ná húsáid cuibheoir plug.
- Ní ghlacaimid freagracht as aon damáiste a tharlaíonn de bharr úsáide neamh-thalmhaithe.
- Cuir do chuisneoir in áit nach mbeidh sé nochtaithe ar sholas díreach na gréine.
- Ba chóir go mbeidh do ghléas ar a laghad 50 cm amach ó chócaireáin, oighinn gáis agus teitheora, agus ar a laghad 5 cm amach ó oighinn leictreacha.
- Ba chóir do do chuisneoir gan bheith riamh lasmuigh nó nochtaithe ar bháisteach.
- Nuair a chuirtear do chuisneoir in aice le reoiteoir domhain, ba chóir ar a laghad 2 cm bheith ann eatarthu chun tais a chosc ar an ndromchla seachtrach.

- Ná cuir aon rud ar do chuisneoir, agus suitigh an cuisneoir in áit oiriúnach ionas go bhfuil ar a laghad 15 cm spáis saor ar fáil os a cionn.



- Úsáid na cosa tosaigh in-choigeartaithe chun a chinntiú go bhfuil do ghléas réidh agus seasmhach. Is féidir leat na cosa a choigeartú ach iad a chasadh in aon treo acu. Ba chóir é sin a dhéanamh sula gcuireann tú bia sa chuisneoir.
- Sula n-úsáideann tú an cuisneoir, cuimil gach cuid de le tuaslagán uisce bogthe agus spunóg tae décharbónáit sóidiam, ansin sruthlaigh le huisce glan agus triomaigh. Cuir gach cuid sa chuisneoir i ndiaidh glanta.
- Suitigh an treoir faide plaisteach (an chuid le heití dubha ag an gcúl) ach é a chasadh 90° (mar a thaispeántar sa léaráid) chun cosc a chur ar an gcomhdhlúthadán ó thadhall ar an mballa.

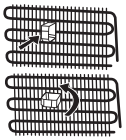

- Ní mór an cuisneoir seo a chur in aghaidh balla le spás saor nach dtéann thar 75 mm.

Sula nÚsáidtear do Chuisneoir-Reoiteoir

- Le linn do chuisneoir a úsáid don chéad uair, nó i ndiaidh iompair, coinnigh é ar shocrú ingearach ar a laghad 3 huaire roimh é a phlugáil leis an bpríomhlíne. Ceadaíonn sé sin oibriúchán éifeachtach agus cuireann sé cosc ar dhamáiste don chomhbhrúiteoir.



- Seans go mbeidh boladh ar do chuisneoir nuair a oibrítear é don chéad uair. Bíonn sé normálta agus imeoidh an boladh nuair a thosaíonn do chuisneoir ag fuarú.

CUID - 2. NA FEIDHMEANNA AGUS GNÉITHE DIFRIÚLA

Faisnéis maidir leis an Teicneolaíocht Fuaraithe Nua-Aoise

Bíonn córas oibriúcháin difriúil ag cuisneoirí le teicneolaíocht fuaraithe nua-aoise i gcomparáid le cuisneoirí statacha. I gcuisneoirí eile (statacha), seans go dtiocfaidh an iomarca oighir san urrann reoiteora mar gheall ar an doras a oscaill agus tais san urlár. I gcuisneoirí mar sin, teastaíonn díreo rialta; is gá an cuisneoir a chasadh as, an bia reoite a bhogadh go dtí coimeádán oiriúnach agus an oighear a tháinig ar an urrann reoiteora a bhaint.

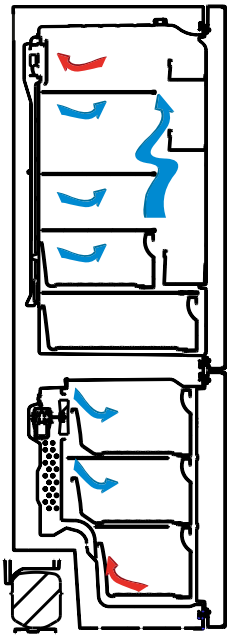

I gcuisneoirí le teicneolaíocht fuaraithe nua-aoise, séideann fean aer fuar tirim go cothrom tríd na hurrainn cuisneora agus reoiteora. Fuarann an t-aer fuar do bhia go cothrom aonfhoirmeach, ag cur coisc ar thais agus an iomarca oighir.

San urrann cuisneora, tagann fuacht ar an aer a shéideann an fean, ar bharr an urrainn cuisneora, le linn dó dul tríd an mbearna taobh thiar den ducht aeir. Ag an am céanna, séideann an t-aer amach tríd na poill sa ducht aeir, ag scaipeadh aeir fuaraithe go cothrom tríd an urrann cuisneora.

Níl aon phasáiste ann idir na hurrainn reoiteora agus cuisneora. Dá bhrí sin, ní mheascaíonn na bolaidh.

Mar thoradh, tugann do chuisneoir, le teicneolaíocht fuaraithe nua-aoise, úsáid éasca duit chomh maith le go leor spás agus cuma álainn.

Taispeáint agus painéal rialúcháin

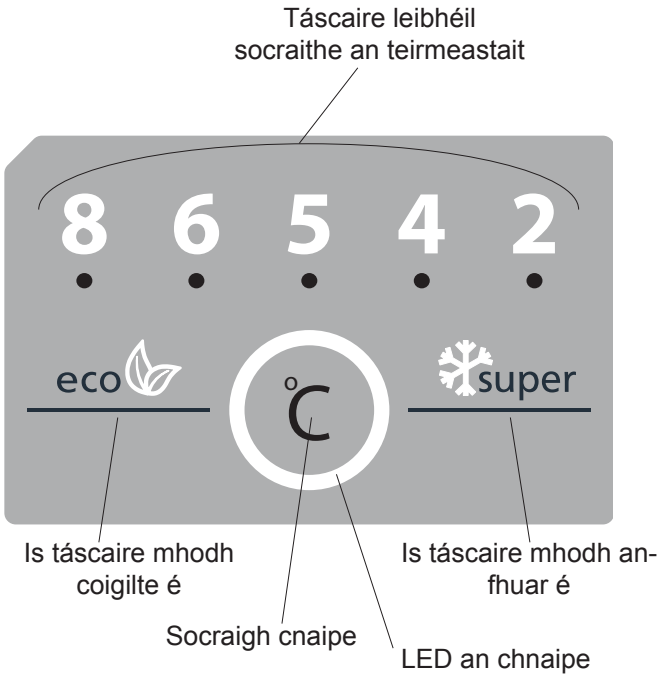

Do Chuisneoir-Reoiteoir a Oibriú

Socruithe teochta an fhuaraitheora

- Is é an luach teochta tosaigh don Taiscéalaí Shocrú Fuaraitheora ná 6 °C.
- Brúigh an cnaipe socraigh uair amháin, tosóidh an luach socraithe ag caochadh.
- Má leanann tú ag brú an cnaipe socraigh, roghnófar teochtaí níos ísle. (8, 6, 5, 4, 2, sár agus eicea)
- Mura mbrúitear aon chnaipe in 1 soicind, beidh do rogha socraithe, agus beidh sé ag caochadh 3 huaire. Déanfaidh an doránaí “bíp bíp”.
- Fanfaidh an luach teochta roghnaithe sula gcumasaítear Mhodh An-Fhuar nó Modh Coigilte mar an gcéanna nuair a bhíonn an modh críochnaithe nó cealaithe. Leanann an gléas ag oibriú leis an luach teochta seo.

Modh an-fhuar

Conas é a úsáid?

Brúigh an cnaipe socraigh go dtí go bhfeictear an siombail an-fhuar ar an scáileán. Déanfaidh an doránaí “bíp bíp”. Beidh an modh socraithe.

Le linn an mhodh seo:

- Ní féidir modh coigilte a roghnú.
- Is féidir modh an-fhuar a chealú leis an oibriúchán céanna a dhéantar le roghnú.

Modh coigilte

Conas é a úsáid?

Brúigh an cnaipe socraigh go dtí go bhfeictear an siombail eicea ar an scáileán. Déanfaidh an doránaí “bíp bíp”. Beidh an modh socraithe.

Le linn an mhodh seo:

- Is féidir an-fhuar a roghnú. Cuirtear modh coigilte ar ceal go huathoibríoch agus cumasaítear an modh roghnaithe.
- Is féidir modh coigilte a chealú leis an oibriúchán céanna a dhéantar le roghnú.

Rabhaidh faoi Choigeartuithe Teochta

- Ba chóir coigeartú teochta a dhéanamh de réir minicíochta oscailte an dorais, méid bia á choinneáil istigh sa chuisneoir.
- Ná téigh go dtí coigeartú eile sula gcríochnaíonn tú an coigeartú reatha.
- Ba chóir do chuisneoir a oibriú suas go dtí 24 huaire de réir teochta an tseomra gan sos i ndiaidh dó bheith plugáilte isteach le bheith fuaraithe go hiomlán. Ná hoscail doirse do chuisneora go minic agus ná cuir an iomarca bia istigh sa tréimhse sin.
- Cuirtear feidhm moille 5 nóiméad chun damáiste a chosc don chomhbhrúiteoir i do chuisneoir le linn an plug a bhaint amach agus ansin é a phlugáil arís chun é a oibriú, nó nuair a tharlaíonn cliseadh fuinnimh. Tosóidh do chuisneoir ag oibriú go normálta i ndiaidh 5 nóiméad.
- Tá do chuisneoir deartha chun oibriú i dteocht an tseomra ar eatraimh luaite sna caighdeáin, de réir aicme aeráide luaite sa lipéad faisnéise. Ní mholtar do chuisneoir a oibriú lasmuigh luachanna teorainn teochta luaite ó thaobh éifeachtachta fuaraithe.
- Tá an gléas seo deartha le húsáid ag teocht an tseomra laistigh raon 10°C - 43°C.

Aicme Aeráide	Teocht an tSeomra °C
T	Idir 16 agus 43 (°C)
ST	Idir 16 agus 38 (°C)
N	Idir 16 agus 32 (°C)
SN	Idir 10 agus 32 (°C)

Treoracha suiteála tábhachtacha

Tá an gléas seo deartha chun oibriú i gcoinníollacha aeráide deacair (suas go dtí 43 gcéim C nó 110 gcéim F) agus faigheann sé cumhacht ó theicneolaíocht 'Sciath Reoiteora' a chinntíonn nach mbeidh bia sa reoiteoir ag díreo fiú má íslíonn teocht an tseomra chomh híseal le -15 °C. Só is féidir leat ansin do ghléas a shuiteáil i seomra gan téamhú agus ní gá bheith buartha faoi bhia sa reoiteoir ag dul in éag. Nuair a fhilleann teocht an tseomra go leibhéal normálta, is féidir leat leanúint ag úsáid an ghléis mar is gnáth.

Oiriúintí

Bosca Reoiteora

Ceadaíonn an bosca reoiteora bia a bhíonn á chothabháil níos minice.

Conas bosca an reoiteora a bhaint:

- Tarraing an bosca chomh fada agus is féidir
- Tarraing an taobh tosaigh den bhosca agus ansin amach.

! Déan an t-oibriúchán céanna bunoscionn chun an t-urrann sleamhnaithe a athshocrú.

Nóta: Coinnigh hanla an bhosca i gcónaí agus an bosca á bhaint.

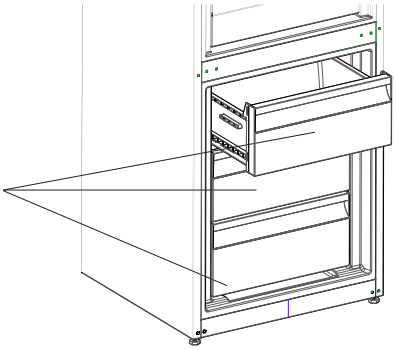

Seilf Fhuaraithe (I samhaltáin áirithe)

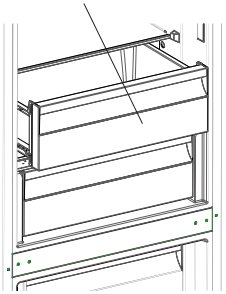

Má choimeádann tú bia san urrann Fuaraitheora seachas an reoiteoir nó an cuisneoir, fanfaidh an bia sin úr agus blasta níos faide, agus beidh cuma úr air freisin. Nuair a bhíonn tráidire an fhuaraitheora salach, bain agus glan é le huisce.

(Reoann uisce ag 0°C, ach reoann bia a bhfuil salann nó siúcra iontu ag teocht níos ísle ná sin)

De ghnáth, úsáidtear an urrann fuaraitheora i gcomhair éisc úir, picilte bog, rís, srl.

Ná cuir bia ar mian leat a reo nó tráidirí oighir chun oighear a dhéanamh.

Seilf Fhuaraithe a Bhaint

- Cuir an seilf Fhuaraithe amach i do threo ach é a shleamhnú ar ráillí.
- Cuir an seilf fhuaraithe suas ón ráillí chun baint.

Nótaí:

- Socraigh teocht go 2° - beidh an teocht istigh in urrann an fhuaraitheora níos ísle ná 0°.
- Socraigh teocht go 4° - níos oiriúnaí d'iasc agus feoil.
- Socraigh teocht go 5° - níos oiriúnaí do bhia úr nach iasc nó feoil é.
- Socraigh teocht níos airde ná 5° - beidh an teocht istigh in urrann an fhuaraitheora níos airde ná 3°.

Rialaitheoir Taise (I samhaltáin áirithe)

Nuair a bhíonn an rialaitheoir Taise sa socrú dúnta, ceadaíonn sé do thorthaí agus glasraí úra bheith stóráilte níos faide.

I gcás go bhfuil an tarraiceán glasraí go hiomlán lán, ba chóir an diail úr a bhfuil os comhair an tarraiceáin glasraí a oscailt. Leis an aer sin sa tarraiceán glasraí, rialófar an ráta taise agus beidh an saolré seasmhachta níos faide.

Má fheiceann tú aon chomhdhlúthú ar an seilf ghloine, ba chóir rialú taise a chur sna suíomhana oscailte.

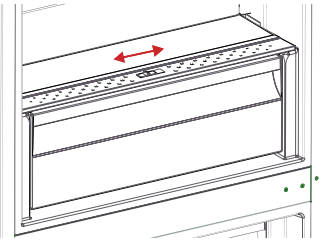

Seilf In-choigeartaithe an Dorais (I samhaltáin áirithe)

Is féidir sé choigeartú difriúil a dhéanamh chun limistéir stórála a theastaíonn uait a dhéanamh i seilf in-choigeartaithe an dorais.

Chun an socrú a athrú i seilf in-choigeartaithe an dorais;

Beir greim ar thaobh bun na seilf agus tarraing na cnaipí ar thaobh seilfe an dorais i dtreo na saighde (Fig.1).

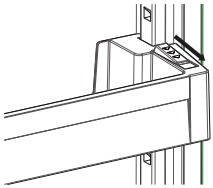

Figiúr -1

Cuir seilf an dorais san airde a theastaíonn uait ach é a bhogadh suas agus síos. Tar éis duit socrú a fháil a theastaíonn uait do sheilf an dorais, scaoil na cnaipí ar thaobh seilf an dorais (Fig.2). Sula scaoileann tú seilf an dorais, bog suas agus síos chun a chinntiú go bhfuil seilf an dorais daingean.

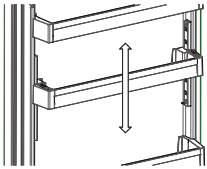

Figiúr -2

Nóta: Sula lódálann tú seilf an dorais, is gá duit tacú ar an mbun chun greim a choinneáil ar an seilf. Murab amhlaidh, d'fhéadfadh an tseilf titim amach as na ráillí mar gheall ar mheáchan. Só d'fhéadfadh damáiste teacht ar sheilf an dorais nó na ráillí.

Seilf Ghloine in-choigeartaithe (I samhaltáin áirithe)

Tugann meicníocht seilf ghloine in-choigeartaithe níos mó spáis stórála le gluaiseacht shimplí. Chun an tseilf ghloine a chlúdú, brúigh í.

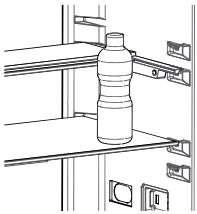

Figiúr -1

Is féidir leat do bhia a lódáil mar is mian leat sa spás breise a thagann as sin. Chun an tseilf a thabhairt ar ais go dtí an chéad shocrú, tarraing i do threo í.

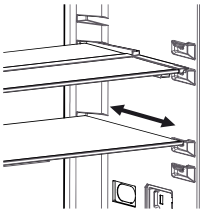

Figiúr -2

Teic Iain Nádúrtha / Ianaitheoir (I samhaltáin áirithe)

Scaipeann an Teic Iain Nádúrtha iain diúltacha, a neodrann na cáithníní droch-bholaidh agus dusta san aer.

Nuair a bhaintear na cáithníní sin ón aer sa chuisneoir, cuireann an Teic Iain Nádúrtha feabhas le caighdeán an aeir agus baineann sé bolaidh.

- Is feidhm roghnach í seo. Seans nach mbeidh sí ar fáil i do tháirge.
- Seans go mbeidh gléas ianaitheora in áiteanna difriúla ó tháirge go táirge.

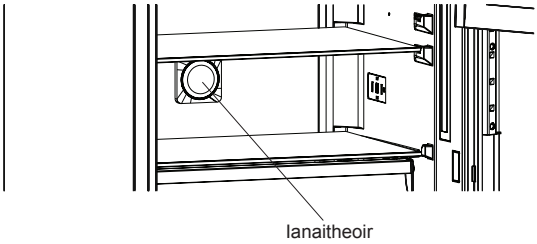

Caomhnóir Maxi-fresh

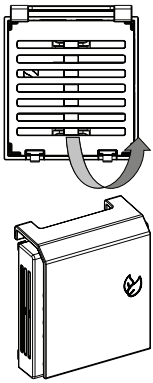

Cabhraíonn an teicneolaíocht Maxi-fresh Caomhnóra gás eitiléin a bhaint (biththáirge a scaoileann bia úr go nádúrtha) agus droch-bholaidh ón tarraiceán glasraí. Sa tslí sin, fanann an bia úr níos faide.

- Is gá an Caomhnóir Maxi-fresh a ghlanadh uair sa bhliain. Ba chóir an scagaire a fhreastal ar feadh 2 huaire ag 65 °C san oighean.
- Chun an scagaire a ghlanadh, bain clúdach chúl bhosca an scagaire ach é a tharraingt i dtreo na saighde.
- Ba chóir gan an scagaire a nigh le huisce nó aon ghlantach.

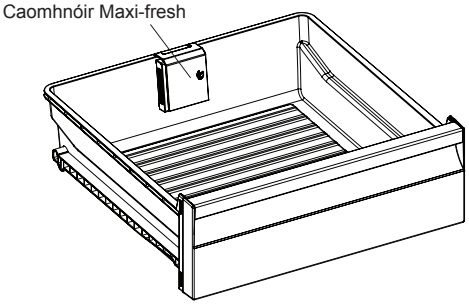

Seans go mbeidh cur síos físiúil agus téacs difriúil ar na oiriúintí de réir samhaltáin do ghléis.

CUID -3. AG EAGRÚ BIA SA GHLÉAS

Urrann an Chuisneora

- I gcomhair coinníollacha oibriúcháin normálta, is leor luach teochta na coda fuaraitheora sa chuisneoir a athrú go 4°C.
- Chun tais agus méid seaca a ísliú, ná cuir riamh leachtanna i gcoimeádáin nach bhfuil séalaithe isteach sa chuisneoir. De ghnáth, bailítear sioc sna codanna is fuaire den ghalaitheoir agus teastaíonn díreo níos minice uaidh le ham.
- Ná cuir bia te isteach sa chuisneoir. Ba chóir i gcónaí fanacht ar an mbia fuarú go teocht an tseomra agus e a heagrú chun go mbeidh sreabhadh aeir cuí san urrann cuisneora.
- Ba chóir gan aon rud tadhall ar an gcúl, ós féidir leis sin sioc a spreagadh agus is féidir go mbeidh pacáistí greamaithe leis an mballa cúil. Ná hoscail doras an chuisneora ró-mhinic.
- Eagraigh feol agus iasc glanta (cumhdaithe i bpacáistí nó píosaí plaisteach) a mbeidh in úsáid agat 1-2 lá, sa chuid bhun an urrainn cuisneora (a bhfuil os cionn tarraiceáin glasraí), ós é sin an chuid is fuaire agus cinnteoidh sé na coinníollacha stórála is fearr.
- Is féidir leat torthaí agus glasraí a chur isteach sa tarraiceán glasraí gan phacáiste.

Tá moltaí áirithe sonraithe thíos i gcomhair do bhia a chur agus a stóráil san urrann fuaraithe.

Bia	Uasmhéid ama stórála	Cén áit le cur san Urrann Cuisneora
Glasraí agus torthaí	1 Seachtain	Ciseán glasraí
Feol agus iasc	2 - 3 lá	Cumhdaithe i bpíosa nó mála plaisteach nó i gcoimeádán feoil (nó sa seilf ghloine)
Cáis úr	3 - 4 lá	I seilf speisialta an dorais
Im agus margairín	1 Seachtain	I seilf speisialta an dorais
Táirgí i mbuidéil bainne agus iógairt	Go dtí an dáta éaga molta ag an ndéantóir	I seilf speisialta an dorais
Uibheacha	1 Mí	Sa seilf ubh
Bia cócaireáilte		Gach seilf

NÓTA: Ba chóir gan phrátaí, oinniúin nó gairleog a stóráil sa chuisneoir.

Urrann an Reoiteora

- Úsáid urrann an reoiteora i do chuisneoir chun bia reoite a stóráil ar tréimhse fada agus chun oighear a dhéanamh.
- Chun an t-acmhainn is mó a fháil i gcomhair urrainn an reoiteora, ná húsáid ach seilfeanna gloine i gcomhair coda uachtaraí agus láir. I gcomhair coda bhun, úsáid an ciseán íseal.
- I gcomhair feidhmíochta optamaí chun teacht ar an acmhainn reoiteora is mó, socraigh an cuisneoir ag 4°C ar feadh 24 huaire sula gcuireann tú bia úr isteach sa reoiteoir.
- I ndiaidh bia úr a chur sa reoiteoir, athraigh an socrú go 2°C ar feadh 24 huaire agus is leor sin de ghnáth. I ndiaidh 24 huaire, is féidir leat an socrú a ísliú más gá.
- Chun bia úr a reo: cumhdaigh agus séalaigh an bia mar is cuí, ba chóir don phacáiste bheith gan aer agus gan sceitheadh. Is fearr málaí reoiteora speisialta, málaí polaitéin scragaill alúmanaim agus coimeádáin plaisteacha.
- Ná cuir an bia le reo in éineacht le bia reoite.
- Ba chóir duit an bia le bheith reoite (feol, mionfheoil, iasc, srl) a roinnt i gcodanna ar féidir a úsáid go hiomlán chun iad a reo.
- Ná reoigh arís an bia a bhí reoite tar éis dó téamhú. D'fhéadfadh sé bheith contúirteach don sláinte, ós féidir leis fadhbanna amhail nimhiú bia a spreagadh.
- Ná cuir béilí te isteach sa reo domhain sula n-éiríonn siad fuar. Má dhéantar sin, eireoidh an bia eile a bhí reoite istigh ann lofa.
- Nuair a cheannaíonn tú bia reoite, cinntigh go bhfuil sé reoite faoi choinníollacha cuí agus nach bhfuil an pacáiste briste.
- Le linn bia reoite a stóráil, ba chóir aird a thabhairt ar na coinníollacha stórála sa phacáiste. Mura bhfuil aon mhíniúchán, ba chóir an bia a ithe chomh luath agus is féidir.
- Má bhí tais sa phacáiste agus tá boladh lofa air, seans go raibh an bia stóráilte faoi choinníollacha míchuí agus d'éirigh sé lofa. Ná ceannaigh an cineál sin bia!
- Athraíonn fad stórála do bhia reoite ag brath ar theocht an tseomra, cé chomh minic a osclaítear agus a dúntar na doirse, socruithe teirmeastait, cineál bia agus an t-am a chuaigh thart ón uair ar cheannaigh tú an bhia go dtí an t-am a chuirtear é sa reoiteoir. Cloígh leis na treoracha sa phacáiste i gcónaí agus ná téigh riamh thar an tréimhse stórála a mholtar.
- Le linn cliseadh cumhachta ar feadh tréimhse fada, ná hoscail doras an urrainn reoiteora domhain. Le linn cliseadh cumhachta fada, ná hathreoigh do bhia agus ith é chomh luath agus is féidir.

Tabhair faoi deara: más mian leat doras an chuisneora a oscailt láithreach i ndiaidh a dhúnta, ní féidir go héasca. Bíonn sin normálta! I ndiaidh dó teacht ar an gcoinníoll cothromaíochta, osclóidh an doras arís go héasca.

Nóta tábhachtach:

- *Ba chóir bia reoite a chócaireacht mar bhia úr i ndiaidh duit é a dhíreo. Mura bhfuil siad déanta tar éis bheith díreoite, ná hathreo iad RIAMH.*
- Athraíonn an blas a bhíonn ag spiosraí áirithe i mbéilí áirithe (ainís, baisleac, biolar, fínéagar, spiosraí difriúla, sinséar, gairleog, oinniún, mustard, tím, oragán cumhra, piobar dubh, srl) agus éiríonn sé láidir nuair a stóráiltear iad ar feadh tréimhse fada. Dá bhrí sin, ba chóir an bia reoite a chur ann le beagán spiosraí nó ba chóir na spiosraí a chur tar éis dó bheith díreoite.
- Braitheann tréimhse stórála an bhia ar an ola úsáidte. Is iad na holaí oiriúnacha ná margairín, saill, ola olóige agus im agus is iad na holaí míchuí ná ola pis talún agus saill muiceola.
- Ba chóir don bhia leachtach bheith reoite i gcupáin plaisteacha agus ba chóir bia eile a reo i bpíosaí nó málaí plaisteacha.

Feol agus iasc	Ullmhúchán	Uasmhéid ama stórála (míosa)
Mairteoil	Cumhdaithe i scragall	6 - 8
Uaineoil	Cumhdaithe i scragall	6 - 8
Laofheoil rósta	Cumhdaithe i scragall	6 - 8
Laofheoil i gciúib	I bpíosaí beaga	6 - 8
Uaineoil i gciúib	I bpíosaí	4 - 8
Mionfheoil	I bpacáistí gan spiosraí	1 - 3
Gibléid (píosaí)	I bpíosaí	1 - 3
Ispín Bologna/ salami	Ba chóir bheith i bpacáiste, fiú má tá seicin air	
Sicín agus turcaí	Cumhdaithe i scragall	4 - 6
Gé agus lacha	Cumhdaithe i scragall	4 - 6
Fia, coinín, torc allta	I gcodanna 2.5kg agus mar fhilléid	6 - 8
Éisc uisce úir (Bradán, carbán, corr, siluroidea)	I ndiaidh na boilg agus gainní a ghlanadh amach ar an iasc, nigh agus triomaigh é: más gá, bearr amach an eireaball agus ceann.	2
Iasc thrua: doingean mara, turbard, leith		4
Iasc sailleach (tuinnín, ronnach, iasc gorm, ainseabhaí)		2 - 4
Sliogiasc	Glan agus i málaí	4 - 6
Caibhéar	Ina phacáiste, coimeádán alúmanaim nó plaisteach	2 - 3
Seilide	In uisce le salann, coimeádán alúmanaim nó plaisteach	3

Nóta: *Ba chóir feol reoite a chócaireacht mar fheol úr i ndiaidh díreo. Mura bhfuil an feol déanta tar éis bheith díreoite, ná hathreo é.*

Glasraí agus Torthaí	Ullmhúchán	Uasmhéid Ama Stórála (míosa)
Pónairí chaol agus pónairí	Nigh agus gearr i bpíosaí beaga agus fiuch in uisce	10 - 13
Pónairí	Scil agus nigh agus fiuch in uisce	12
Cabáiste	Glan agus fiuchta in uisce	6 - 8
Cairéad	Glan agus gearrtha i slisní agus fiuchta in uisce	12
Piobar	Bearr an cos, gearr i ndá phíosa, bain an lár agus fiuch in uisce	8 - 10
Spionáiste	Nite agus fiuchta in uisce	6 - 9
Cóilis	Tóg na duilleoga amach, gearr an croí i bpíosaí agus fág in uisce le beagán uisce liomóide ar feadh tamaill	10 - 12
Ubhthoradh	Gearr i bpíosaí 2cm i ndiaidh nite	10 - 12
Grán buí	Glan agus cuir i bpacáiste lena chos nó mar ghrán milis	12
Úll agus piorra	Bain an craiceann agus gearr	8 - 10
Aibreog agus Péitseog	Gearr i bpíosaí agus bain an síol	4 - 6
Sú talún agus Sméara Dubha	Nigh agus scil	8 - 12
Torthaí cócaireáilte	Ag cur 10% siúcra sa choimeádán	12
Pluma, silíní, sméara searbha	Nigh agus scil na cosa	8 - 12

Táirgí déirí	Ullmhúchán	Uasmhéid Ama Stórála (míosa)	Coinníollacha Stórála
Pacáiste (homaiginithe) bainne	Ina phacáiste féin	2 - 3	Bainne - ina phacáiste féin
Cáis - seachas cáis bhán	I sliseanna	6 - 8	Is féidir a phacáiste féin a úsáid ar tréimhse stórála níos faide. Ba chóir é a chumhdú i scragall ar tréimhsí níos faide.
Im, margairín	Ina phacáiste féin	6	

	Uasmhéid Ama Stórála (míosa)	Am díreoite ar theocht an tseomra (uaire)	Am díreoite san oigheann (nóiméid)
Arán	4 - 6	2 - 3	4-5 (220-225 °C)
Brioscaí	3 - 6	1 - 1,5	5-8 (190-200 °C)
Cístí	1 - 3	2 - 3	5-10 (200-225 °C)
Pióg	1 - 1,5	3 - 4	5-8 (190-200 °C)
Taos fillea	2 - 3	1 - 1,5	5-8 (190-200 °C)
Pizza	2 - 3	2 - 4	15-20 (200 °C)

CUID - 4. GLANADH AGUS COTHABHÁIL

- **Dícheangail an t-aonad ón bhfothú cumhachta roimh ghlanadh.**



- Ná cuir uisce ar an ngléas chun glanadh.



- Cinntigh nach dtéann aon uisce isteach i gcásáil an lampa agus comhpháirtithe leictreacha eile.

- Ba chóir an cuisneoir a ghlanadh ó am go ham ag úsáid tuaslagáin décharbónáit sóidiam agus uisce bogthe.

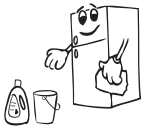



- Glan na hoiriúintí ar leithligh le sobal agus uisce Ná glan iad sa mhiasniteoir.

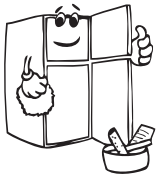

- Ná húsáid táirgí scríobacha, glantacha nó sobail. I ndiaidh nite, sruthlaigh le huisce glan agus triomaigh go cúramach. I ndiaidh duit glanadh, athcheangail an plug leis an bhfothú príomhlíne le do lámha tirime.

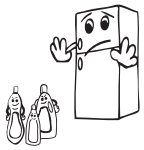

- Glan an comhdhlúiteoir le scuab ar a laghad dhá uair sa bhliain. Cabhróidh sé sin leat sábháil ar chostais fuinnimh agus feidhmíocht a ardú.

IS GÁ AN FOTHÚ CÚMHACHTA A DHÍCHEANGAL.

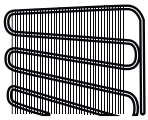

Díreo

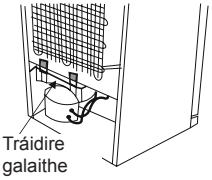

Tá díreo go hiomlán uathoibríoch ag do chuisneoir. Téann an t-uisce a thagann de bharr díreo tríd an bpoll bailithe uisce, sreabhann sé isteach sa choimeádán galaithe ar bhun an chomhdhlúiteora agus galaíonn sé ansin.

- Cinntigh gur dícheangail tú an plug ón gcuisneoir sula nglanan tú an coimeádán galaithe.
- Díscriú na scriúnna de réir na treoracha chun an coimeádán galaithe a bhaint amach. Glan le huisce agus sobal ag amanna sonraithe. Is mar sin gur féidir boladh a chosc.

Soilsiú LED a Athchur

Má tá soilsiú LED ag do chuisneoir, labhair leis an ndeasc cabhrach, ba chóir d'fhoireann údaraithe amháin é sin a athrú.

CUID - 5. IOMPAR AGUS SOCRÚ SUITEÁLA A ATHRÚ

Iompar agus Socrú Suiteála a Athrú

- Is féidir na pacáistí a tháinig agus an polaistiréin cúir (PS) a choimeád más gá.
- Le linn iompair, ba chóir an gléas a dhaingniú le sreang leathan nó rópa láidir. Is gá na treoracha scríofa sa bhosca roctha a leanúint le linn iompair.
- Sula n-iompraítear nó athraítear an socrú suiteála, is gá gach oibiacht a bhogann (seilfeanna, tarraiceáin srl) a thógáil amach nó a dhaingniú le téip chun damáiste orthu a chosc.

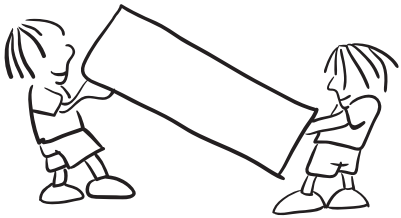

An Doras a ath-shuí

- Ní féidir treo oscailte dorais do chuisneora a athrú, má bhíonn hanla an chuisneora suiteáilte ó dhromchla tosaigh an dorais.
- Is féidir treo oscailte an dorais a athrú i samhaltáin gan hanlaí.
- Más féidir treo oscailte dorais do chuisneora a athrú, ba chóir duit labhairt leis an Gníomhaire Seirbhíse Údaraithe is cóngaraí leat chun an treo oscailte a fháil athraithe.

CUID - 6. SULA LABHRAÍONN TÚ LEIS AN SEIRBHÍS IARDHÍOLTA

Seiceáil Rabhaidh:

Tabharfaidh do chuisneoir rabhadh duit má bhíonn teocht ar leibhéal míchuí don fhuaraitheoir agus reoiteoir nó má tharlaíonn fadhb leis an ngléas. Sa chás sin, beidh LED timpeall an chnaipe ag caochadh agus déanfaidh an dordánaí “bíp”.

BRÍ	CÚIS	CAD LE DÉANAMH
“Rabhadh ar Chliseadh”	Tá codanna as ord	Labhair le Seirbhís i gcomhair cúnta go luath.

Mura n-oibríonn do chuisneoir-reoiteoir:

- An bhfuil cliseadh cumhachta ann?
- An bhfuil an plug ceangailte leis an soicéad mar is cuí?
- An bhfuil aidhnín an tsoicéid pléasctha ina bhfuil an plug ceangailte nó sa phríomh-aidhnín?
- An bhfuil cliseadh sa soicéad? Chun é sin a sheiceáil, plugáil do chuisneoir le soicéad a bhfuil ag oibriú.

Mura bhfuil do chuisneoir-reoiteoir ag fuarú go leor:

- An bhfuil an coigeartú teochta i gceart?
- An bhfuil na doirse ar do chuisneoir-reoiteoir oscailte go minic agus fágtha ar oscailt ar tréimhse fada?
- An bhfuil doirse do chuisneora-reoiteora dúnta mar is cuí?
- Ar chuir tú pláta bia i do chuisneoir-reoiteoir ionas go dtéann sé i dteagmháil le balla cúil an chuisneora-reoiteora chun sreabhadh aeir a bhacadh?
- An bhfuil an iomarca i do chuisneoir-reoiteoir?
- An bhfuil fad ceart idir do chuisneoir-reoiteoir agus na ballaí cúil agus taoibh?
- An bhfuil teocht an tseomra sa raon luachanna sonraithe sa lámhleabhar oibriúcháin?

Má bhíonn an bia i d’urrann cuisneora ró-fhuaraithe

- An bhfuil an coigeartú teochta i gceart?
- An bhfuil go leor bia curtha isteach san urrann reoiteora? Má tá, seans go mbeidh an bia san urrann cuisneora ró-fhuaraithe ag do chuisneoir-reoiteoir, ó bheidh sé ag oibriú níos faide chun an bia sin a fhuarú.

Má bhíonn do chuisneoir-reoiteoir ag oibriú ró-thorannach:

Chun an leibhéal fuaraithe socraithe a choinneáil, seans go mbeidh comhbhrúiteoir cumasaithe ó am go ham. Bíonn torainn ó do chuisneoir-reoiteoir normálta ag an am sin mar gheall ar an bhfeidhm. Nuair a shroichtear an leibhéal fuaraithe is gá,

beidh an torann ag ísliú go huathoibríoch. Má fhanann an torann:

- An bhfuil do ghléas cothrom? An bhfuil na cosa coigeartaithe?
- An bhfuil aon rud taobh thiar den chuisneoir-reoiteoir?
- An bhfuil seilfeanna nó plátaí ar na seilfeanna ag crith? Ath-chuir na seilfeanna agus/nó plátaí sa chás sin.
- An bhfuil na hearraí i do chuisneoir-reoiteoir ag crith?

Torainn Normálta:

Torann Scoilte (scoilte oighir):

- Le linn díreo uathoibríoch.
- Nuair a bhíonn an gléas fuaraithe nó téamhaithe (mar gheall ar an ábhar sa ghléas ag dul i méid).

Scoilt Ghearr: Cloistear sin nuair a chasann an teirmeastait an comhbhrúiteoir air/as.

Torann an Chomhbhrúiteora (torainn innill normálta): Ciallaíonn an torann sin go bhfuil an comhbhrúiteoir ag oibriú go normálta. Seans go ndéanfaidh an comhbhrúiteoir níos mó torainn ar tréimhse gearr nuair a chuirtear é ar siúil.

Torann boilgearnach agus stealladh: Tarlaíonn an torann sin de bharr sreafa cuisneáin sna píobáin sa chóras.

Torann sreafa uisce: Torann normálta uisce ag sreabhadh go dtí an coimeádán galaithe le linn díreo. Is féidir an torann sin a chloisteáil le linn díreo.

Torann séideadh aeir (torann feain normálta): Is féidir an torann sin a chloisteáil sa chuisneoir Gan Sioc le linn oibriúcháin normálta an chórais mar gheall ar sreabhadh aeir.

Má thagann an iomarca taise isteach sa chuisneoir-reoiteoir:

- An bhfuil an bia ar fad i bpacáistí cuí? An bhfuil na coimeádáin tirim sula gcuireann tú iad sa chuisneoir-reoiteoir?
- An bhfuil doirse an chuisneora-reoiteora oscailte go minic? Téann tais an tseomra isteach sa chuisneoir-reoiteoir nuair a osclaítear na doirse. Beidh an carnadh taise níos gasta nuair a osclaíonn tú na doirse níos minice, go háirithe má bhíonn go leor taise sa seomra.

Mura n-osclaítear nó dúntar na doirse mar is cuí:

- An bhfuil na pacáistí bia ag cur bac ar an ndoras dúnadh?
- An bhfuil na hurrainn sa doras, seilfeanna agus tarraiceáin curtha isteach i gceart?
- An bhfuil gaiscéid na ndoras briste nó stróicthe?
- An bhfuil do chuisneoir-reoiteoir i ndromchla réidh?

Má bhíonn imill an chófra cuisneora a théann i dteagmháil leis an ndoras te:

Go háirithe sa samhradh (aimsir te), seans go n-eireoidh na dromchlaí sa teagmháil sin níos teo le linn oibriúcháin an chomhbhrúiteora. Tá sin normálta.

Nótaí tábhachtacha:

- I gcás cliseadh cumhachta, nó má bhíonn an gléas díphlugáilte agus plugáilte arís, beidh an gás i gcóras fuaraithe do chuisneora míshocair, agus dá bharr osclóidh eilimint cosanta teirmeach an chomhbhrúiteora. Tosóidh do chuisneoir ag oibriú go normálta i ndiaidh 5 nóiméad.
- Mura mbeidh an gléas in úsaid ar tréimhse fada ama (amhail le linn saoire), dícheangail an plug. Díreoigh agus glan an cuisneoir, fág an doras ar oscailt chun coincleach agus boladh a chosc.
- Má fhanann an fhadhb i ndiaidh duit gach treoracha thuas a leanúint, labhair leis an Lárionad Seirbhíse Údaraithe is cóngaraí duit.
- Tá an gléas seo deartha i gcomhair úsáide an tí agus chun na cuspóirí luaite amháin. Níl sé oiriúnach don úsáid thráchtála nó comónta. Má úsáideann an tomhaltóir an gléas ar bhealach nach gcomhlíonann na treoracha sin, cuirimid béim ar an bhfíric nach mbeidh an déantóir nó an díoltóir ag glacadh aon fhreagrachta as aon dheisiúchán nó cliseadh laistigh den tréimhse barántais.

LEIDEANNA COIGILTE CUMHACHTA

1. Suitigh an gléas i seomra fuar, dea-aeraithe, ach gan bheith faoi sholas díreach na gréine nó in aice le foinse teasa (amhail téitheoir nó oigheann). Más gá é sin a dhéanamh, ba chóir pláta inslithe a úsáid.
2. Lig do bhia agus deochanna te fuarú sula gcuireann tú iad isteach sa ghléas.
3. Cuir bia ag díreo san urrann cuisneora. Cabhróidh teocht íseal an bhia reoite urrann an chuisneora a fhuarú nuair a bhíonn an bia ag díreo. Is féidir leis sin fuinneamh a shábháil. Má ligtear bia reoite le díreo lasmuigh den ghléas, cuirfear fuinneamh amú.
4. Ba chóir deochanna agus leachta eile a chlúdú laistigh den ghléas. Má ligtear gan chlúdach iad, ardóidh an tais istigh sa ghléas, agus dá bharr beidh níos mó fuinnimh in úsáid. Má choinneáiltear deochanna agus leachta eile clúdaithe, ní thagann go leor athrú ar an mboladh nó blas acu.
5. Bí cúramach gan na doirse a fhágáil ar oscailt ar tréimhsí ró-fhada nó na doirse a oscailt ró-mhinic mar go rachfaidh aer te isteach sa ghléas agus casfaidh an comhbhrúiteoir air ró-mhinic.
6. Coinnigh na clúdaigh ar urrainn teochta difriúla (amhail tarraiceáin agus fuaraitheoir) dúnta.
7. Is gá gaiscéad an dorais a ghlanadh agus solúbtha. Athchuir gaiscéid má thagann caitheamh orthu.

CUID - 7. CODANNA DEN GHLÉAS AGUS URRAINN

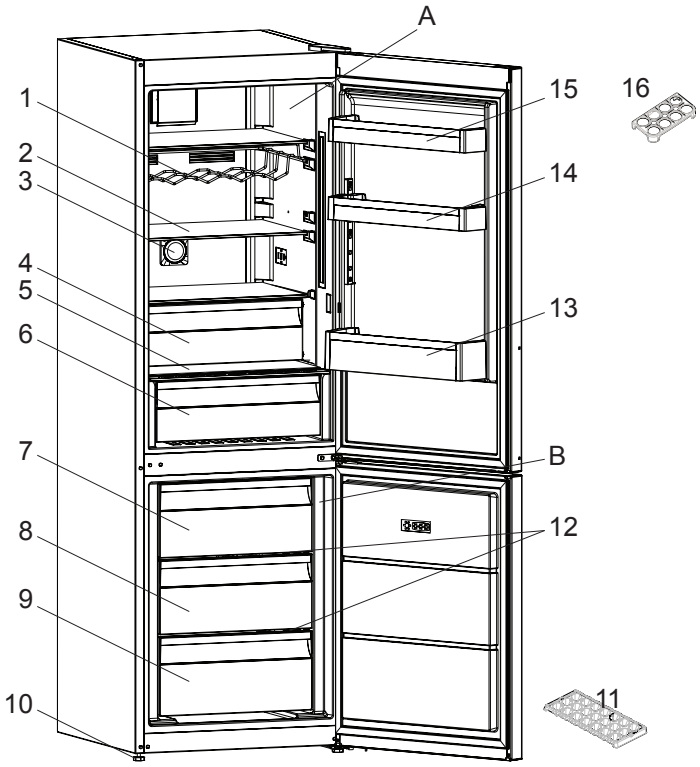

A) Urrann Cuisneora

B) Urrann an Reoiteora

1) Seilfeanna an chuisneora

2) Raca fíona*

3) Taispeáint inmheánach / rialú sa seomra

4) Fuaraitheoir*

5) Clúdach an tarraiceáin sailéid

6) Tarraiceán sailéid

7) Ciseán bharr an reoiteora

8) Ciseán bhun an reoiteora

9) Cosa leibhéil

10) Tráidirí oighir

11) Seilfeanna gloine an reoiteora*

12) Seilf buidéil

13) Seilf in-choigeartaithe an dorais*/ seilf an dorais

14) Seilf an dorais

15) Coinneálaí ubh

*I samhaltáin áirithe

www.electrolux.com/shop



CE

PNC CODE: 925993259

52271364