DAEWOO ELECTRONICS

MICROWAVE OVEN

KOR-6LBRR

OPERATING
INSTRUCTIONS

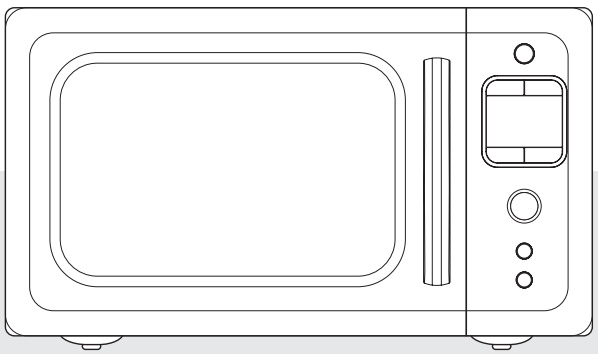

Before operating this oven, please read these instructions completely.

PRECAUTIONS TO AVOID POSSIBLE EXPOSURE TO EXCESSIVE MICROWAVE ENERGY

(a) Do not attempt to operate this oven with the door open since open-door operation can result in harmful exposure to microwave energy. It is important not to defeat or tamper with the safety interlocks.

(b) Do not place any object between the oven front face and the door or allow soil or cleaner residue to accumulate on sealing surfaces.

(c) WARNING : If the door or door seals are damaged, the oven must not be operated until it has been repaired by a competent person : (1) door (bent), (2) hinges and latches(broken or loosened), (3) door seals and sealing surfaces.

(d) WARNING : It is hazardous for anyone other than a competent person to carry out any service or repair operation that involves the removal of a cover which gives protection against exposure to microwave energy.

(e) WARNING : Liquids and other foods must not be heated in sealed containers since they are liable to explode.

(f) WARNING : This appliance can be used by children aged from 8 years and above and persons with reduced physical, sensory or mental capabilities or lack of experience and knowledge if they have been given supervision or instruction concerning use of the appliance in a safe way and understand the hazards involved. Children shall not play with the appliance. Cleaning and user maintenance shall not be made by children unless they are aged from 8 years and above and supervised.

KOR-6LBR5S(영기본).indd 1 15. 2. 13. 오후 4:52

TABLE OF CONTENTS

• PRECAUTIONS TO AVOID POSSIBLE EXPOSURE TO EXCESSIVE MICROWAVE ENERGY.....1
• IMPORTANT SAFETY INSTRUCTIONS 3
• EARTHING INSTRUCTIONS 5
• INSTALLATION 5
• SPECIFICATIONS 6
• IMPORTANT 6
• FEATURES DIAGRAM 7
• OPERATION PROCEDURE 9
• What is a function, STANDBY POWER “0”? 10
• CONTROLS 11
WEIGHT DEFROSTING 11
TIME DEFROSTING 11
COOKING IN ONE STAGE 12
TIMER 12
EASY COOK 13
AUTO COOK 13
CHILD SAFETY LOCK 14
TO STOP THE OVEN WHILE THE OVEN IS OPERATING 14
• BEFORE YOU CALL FOR SERVICE 14
• CARING FOR YOUR MICROWAVE OVEN 15
• DISPOSAL OF USED ELECTRICAL & ELECTRONIC EQUIPMENT 15
• QUESTIONS AND ANSWERS 16
• COOKING INSTRUCTIONS 17
• USE YOUR MICROWAVE OVEN SAFELY 18
• WARNING 18
• MICROWAVING PRINCIPLES 19
• HOW MICROWAVES COOK FOOD 19
• CONVERSION CHARTS 19
• COOKING TECHNIQUES 20
• DEFROSTING GUIDE 21
• COOKING & REHEATING CHART 22
• VEGETABLE CHART 24
• RECIPES 25

KOR-6LBR5S(영기본).indd 2 15. 2. 13. 오후 4:52

IMPORTANT SAFETY INSTRUCTIONS

READ CAREFULLY AND KEEP FOR FUTURE REFERENCE

WARNING : To prevent fire, burns, electric shock and other warnings:

Listed below are, as with all appliances, certain rules to follow and safeguards to assure high performance from this oven:

1. Do not use the oven for any reason other than food preparation, such as for drying clothes, paper, or any other nonfood items or for sterilizing purposes.
2. Do not use the oven when empty, this could damage the oven.
3. Do not use the oven cavity for any type of storage, such as papers, cookbook, cookware, etc.
4. Do not operate the oven without the glass tray in place. Be sure it is properly sitting on the rotating base.
5. Make sure you remove caps or lids prior to cooking when you cook food sealed in bottles.
6. Do not put foreign material between the oven surface and door. It could result in excessive leakage of microwave energy.
7. Do not use recycled paper products for cooking. They may contain impurities which could cause sparks and/or fires when used during cooking.
8. Do not pop popcorn unless popped in a microwave approved popcorn popper or unless it's commercially packaged and recommended especially for microwave ovens. Microwave popped corn produces a lower yield than conventional popping; there will be a number of unpopped kernels. Do not use oil unless specified by the manufacturer.
9. Do not cook any food surrounded by a membrane, such as egg yolks, potatoes, chicken livers, etc., without first piercing them several times with a fork.
10. Do not pop popcorn longer than the manufacturer's directions. (popping time is generally below 3 minutes). Longer cooking does not yield more popped corn.
11. Over cooking can cause food to carbonize.
    Also, the cooking tray can becom too hot to handle or may break.
12. If smoke is emitted, switch off or unplug the appliance and keep the door closed in order to stifle any flames.
13. When heating food in plastic or paper containers, keep an eye on the oven due to the possibility of ignition.

KOR-6LBR5S(영기본).indd 3 15. 2. 13. 오후 4:52

14. The contents of feeding bottles and baby food jars shall be stirred or shaken and the temperature checked before consumption, in order to avoid burns.
15. Always test the temperature of food or drink which has been heated in a microwave oven before you give it to somebody, especially to children or elderly people. This is important because things which have been heated in a microwave oven carry on getting hotter even though the microwave oven cooking has stopped.
16. Eggs in their shell and whole hard-boiled eggs should not be heated in microwave ovens since they may explode, even after microwave heating has ended;
17. Keep the waveguide cover clean at all times. Wipe the oven interior with a soft damp cloth after each use. If you leave grease or fat anywhere in the cavity it may overheat, smoke or even catch fire when next using the oven.
18. Never heat oil or fat for deep frying as you cannot control the temperature and doing so may lead to overheating and fire.
19. Liquids, such as water, coffee, or tea are able to be overheated beyond the boiling point without appearing to be boiling due to surface tension of the liquid. Visible bubbling or boiling when the container is removed from the microwave oven is not always present. THIS COULD RESULT IN VERY HOT LIQUIDS SUDDENLY BOILING OVER WHEN A SPOON OR OTHER UTENSIL IS INSERTED INTO THE LIQUID.
    To reduce the risk of injury to persons:
    a) Do not overheat the liquid.
    b) Stir the liquid both before and halfway through heating it
    c) Do not use straight-sided containers with narrow necks.
    d) After heating, allow the container to stand in the microwave oven for a short time before removing the container.
    e) Use extreme care when inserting a spoon or other utensil into the container.
20. Children should be supervised to ensure that they do not play with the appliance.
21. Only use utensils that are suitable for use in microwave ovens.
22. Microwave heating of beverages can result in delayed eruptive boiling, therefore care must be taken when handling the container.
23. This appliance is intended to be used in household and similar applications such as:
    - staff kitchen areas in shops, offices and other working environments;
    - farm houses;
    - by clients in hotels, motels and other residential type environments;
    - bed and breakfast type environments.

SAVE THESE INSTRUCTIONS

KOR-6LBR5S(영기본).indd 4 15. 2. 13. 오후 4:52

EARTHING INSTRUCTIONS

This appliance must be earthed. In the event of an electrical short circuit, earthing reduces the risk of electric shock by providing an escape wire for the electric current. This appliance is equipped with a cord having a earthing wire with an earthing plug. The plug must be plugged into an outlet that is properly installed and earthed.

WARNING : Improper use of the earthing plug can result in a risk of electric shock. Consult a qualified electrician or serviceman if the earthing instructions are not completely understood, or if doubt exists as to whether the appliance is properly earthed. If it is necessary to use an extension cord, use only a 3-wire extension cord that has a 3-blade earthing plug, and a 3-slot receptacle that will accept the plug on the appliance. The marked rating of the extension cord should be equal to or greater than the electrical rating of the appliance.

INSTALLATION

1. **Ventilation**
   Do not block air vents. If they are blocked during operation, the oven may overheat and eventually cause a failure. For proper ventilation, allow above 3 inches of space between oven sides, rear and the minimum height of free space necessary above the top surface of the oven is 100mm.
2. **Steady, flat location**
   This oven should be set on a steady, flat surface. This oven is designed for counter top use only.
   The microwave oven shall not be placed in a cabinet unless it has been tested in a cabinet.
3. **Leave space behind and side**
   All air vents should be kept a clearance. If all vents are covered during operation, the oven may overheat and, eventually, oven failure.
4. **Away from radio and TV sets**
   Poor television reception and radio interference may result if the oven is located close to a TV, Radio antenna, feeder and so on. Position the oven as far from them as possible.
5. **Away from heating appliance and water taps**
   Keep the oven away from hot air, steam or Splash when choosing a place to position it, or the insulation might be adversely affected and breakdowns occur.
6. **Power supply**
   - Check your local power source. This oven requires a current of approximately 6 amperes, 230V 50Hz.
   - Power supply cord is about 0.8 meters long.
   - The voltage used must be the same as specified on this oven. Using a higher voltage may result in a fire or other accident causing oven damage. Using low voltage will cause slow cooking. We are not responsible for damage resulting from use of this oven with a voltage of ampere fuse other than those specified.
   - If the supply cord is damaged, it must be replaced by the manufacturer, its service agent or a similarly qualified persons in order to avoid a hazard.
7. **Examine the oven after unpacking for any damage such as:**
   A misaligned door, Broken door, A dent in cavity. If any of the above is visible, DO NOT INSTALL, and notify dealer immediately.
8. **Do not operate the oven if it is colder than room temperature.**
   (This may occur during delivery in cold weather.) Allow the oven to become room temperature before operating.

KOR-6LBR5S(영기본).indd 5 15. 2. 13. 오후 4:52

SPECIFICATIONS

POWER SUPPLY		230V~ / 50Hz, SINGLE PHASE WITH EARTHING
MICROWAVE	POWER CONSUMPTION	1200 W
	OUTPUT POWER	800 W
	FREQUENCY	2450 MHz
OUTSIDE DIMENSIONS (W X H X D)		446 X 270 X 323 (mm)
CAVITY DIMENSIONS (W X H X D)		295 X 219 X 303 (mm)
NET WEIGHT		APPROX. 10.6 kg
TIMER		60 min. 00 sec.
POWER LEVELS		5 LEVELS

** Specifications are subject to change without notice.*

IMPORTANT

The wires in this mains lead fitted to this appliance are coloured in accordance with the following code.

Green-and-yellow	: Earth
Blue	: Neutral
Brown	: Live

As the colours of the wires in the mains lead of this appliance may not correspond with the coloured markings identifying the terminals in your plug, proceed as follows: the wire which is coloured green-and-yellow must be connected to the terminal in the plug which is marked with the letter 'E', the earth symbol or coloured green-and-yellow. The wire which is coloured blue must be connected to the terminal which is marked with the letter ‘N’ or coloured black.
The wire which is coloured brown must be connected to the terminal which is marked with the letter 'L' or coloured red.

WARNING: This appliance must be earthed.

KOR-6LBR5S(영기본).indd 6 15. 2. 13. 오후 4:52

FEATURES DIAGRAM

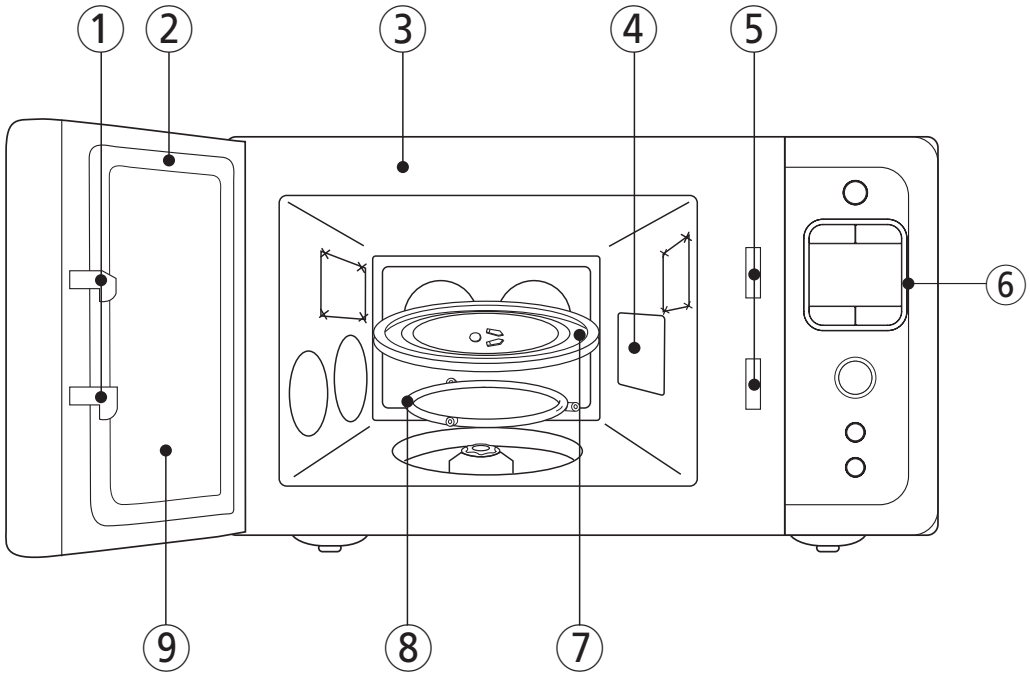

① **Door latch-**When the door is closed it will automatically shut off. If the door is opened while the oven is operating, the magnetron will automatically shut off.

② **Door seal-**The door seal surfaces prevent microwaves escaping from the oven cavity.

③ **Oven cavity**

④ **Spatter shield-**Protects the microwave outlet from splashes of cooking foods.

⑤ **Safety interlock system-**Prevents the oven from operating while the door is opened. The oven will only operate with the door fully closed. When the door is open, the oven turns off and will only start again after the door is closed.

⑥ **Control panel**

⑦ **Glass cooking tray-**Made of special heat resistant glass. The tray can be easily removed for cleaning. Make sure it is correctly positioned (indentation) before operating. Place food in a suitable container (dish) on the tray.

⑧ **Roller guide-**Supports the glass cooking tray.

⑨ **Door screen-**Allows viewing of food. The screen is transparent to light, but prevents microwaves escaping.

KOR-6LBR5S(영기본).indd 7 15. 2. 13. 오후 4:52

FEATURES DIAGRAM (continued)

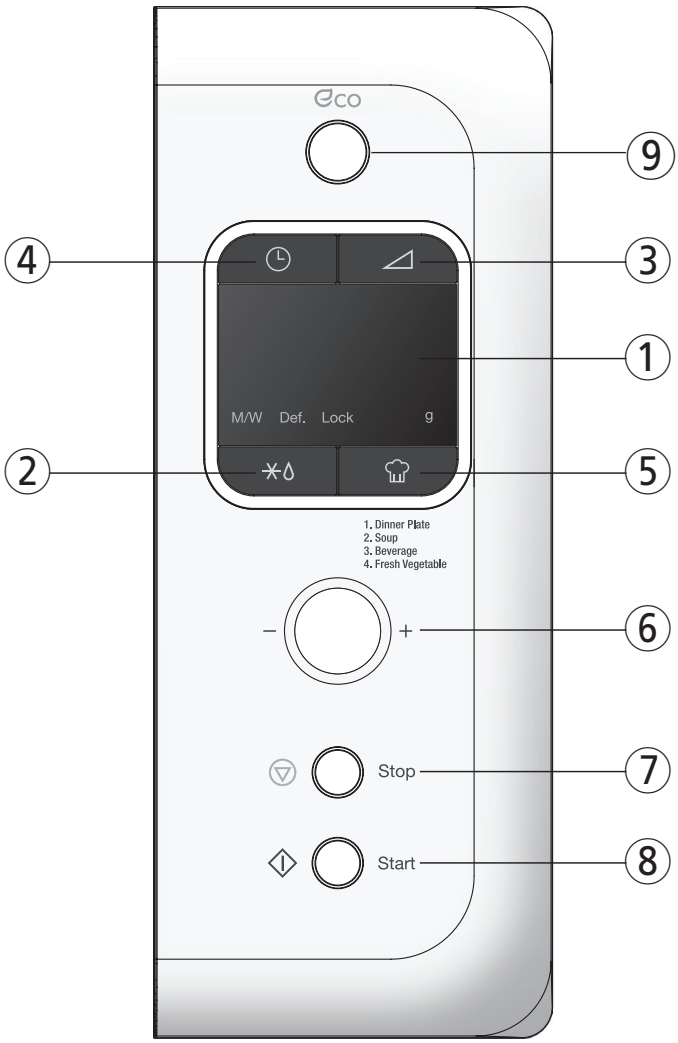

① **Display -** Cooking time, power level and indicators are displayed.

② **Defrost**- Used to defrost foods by weight or time.

③ **Power**- Used to set power level.

④ **Timer -** Used to set the timer.

⑤ **Auto cook**- Used to cook using a program or to reheat.

⑥ **Dial knob**- Used to set the time and weight.

⑦ **Stop/Clear**- Used to stop the oven operation or to erase all entries.

⑧ **Start/Easy cook**-Used to start the oven operation and also increase the reheat time by 30 seconds.

⑨ Used to turn the AC power on the oven.

KOR-6LBR5S(영기본).indd 8 15. 2. 13. 오후 4:52

OPERATION PROCEDURE

This section includes useful information about oven operation.

1. Plug power supply cord into a 230V 50Hz power outlet.
2. After placing the food in a suitable container, open the oven door and put it on the glass tray. The glass tray and roller guide must always be in place during cooking.
3. Shut the door. Make sure that it is firmly closed.
4. Set required programme and time, then press Start.
5. Once cooking is complete take care removing container as it will be hot.

1 The oven light turns on while the oven is working.

2 The oven door can be opened at any time during operation. The oven will automatically shut off.

3 Each time a button is pressed, a BEEP will sound to acknowledge the press.

4 The oven automatically cooks on full power unless set to a lower power level.

5 The display will show nothing when the oven is plugged in, press and hold the ZERO ON pad until display is turned on and beep sounds.

6 When the Stop/Clear button is pressed during the oven operation, the oven stops cooking and all information retained. To erase all information press the Stop/Clear button once more. If the oven door is opened during the oven operation, all information is retained.

7 If the Start button is pressed and the oven does not operate, check the area between the door and door seal for obstructions and make sure the door is closed securely. The oven will not start cooking until the door is completely closed or the program has been reset.

Make sure the oven is properly installed and plugged into the electrical outlet.

WATTAGE OUTPUT CHART

• The power-level is set by pressing the Power button. The chart shows the display, the power level and the percentage of power.

Press Power button	Power level (Display)	Approximate Percentage of Power
once	P-HI	100%
twice	P-80	80%
3 times	P-60	60%
4 times	P-40	40%
5 times	P-20	20%

KOR-6LBR5S(영기본).indd 9 15. 2. 13. 오후 4:52

What is a function, STANDBY POWER "0"?

• Standby power is the electric power consumed by electronic appliances without operating on inserting the plug into a socket.

• STANDBY POWER “0” is a function reducing standby power consumption.

• This product can save energy in a standby mode, by setting the STANDBY POWER "O" mode.
To turn on the oven, press and hold Eco button until display is turned on and beep sounds after plugging in.
The oven goes to STANDBY POWER “0” mode automatically after 10minutes without using or press and hold STOP/CLEAR button until display is turned off.
Press and hold Eco button again until display is turned on and beep sounds, you can use the oven.

• If you insert plug into a socket, the oven is STANDBY POWER “0” mode. So the display shows nothing.
To cancel STANDBY POWER “0” mode, press and hold Eco button until display is turned on and beep sounds.
(Because the oven is turned power off automatically after 10 minutes without using.
The display shows nothing.)



To cancel the STANDBY POWER "0" mode.
(The oven is turned power on.)

KOR-6LBR5S(영기본).indd 10 15. 2. 13. 오후 4:52

CONTROLS

WEIGHT DEFROSTING

WEIGHT DEFROST lets you easily defrost food by eliminating guesswork in determining defrosting time. The minimum weight for WEIGHT DEFROST is 200 gram and the maximum weight is 3,000 gram. Follow the steps below for easy defrosting.

	1. Put food in the oven and close the door.	
Defrost	2. Press Defrost button.	The DEF. indicator & “0” appear and the g indicator starts blinking.
	3. Turn the dial knob to adjust the defrosting weight.	The display will show what you selected.
Start	4. Press Start button.	

When you press Start button, the g indicator disappears and the DEF. indicator starts blinking to show the oven is in the DEFROST mode. The display counts down the time to show you how much defrosting time is left in the DEFROST mode. The oven beeps during the defrosting cycle to signal that the food needs to be turned or rearranged. When the defrosting time ends, you will hear 3 beeps.

TIME DEFROSTING

When TIME DEFROST is selected, the automatic cycle divides the defrosting time into periods of alternating defrost and stand times by cycling on and off.

	1. Put food in the oven and close the door.	
Defrost	2. Press Defrost button.	The DEF. indicator & “0” appear and the g indicator starts blinking.
	3. Press Defrost button once more.	The g indicator disappears and “:0” is displayed.
	4. Turn the dial knob to adjust the defrosting time.	The display will show what you selected.
		NOTE: Your oven can be programmed for 60 minutes. (60:00)
Start	5. Press Start button.	

When you press Start button, the DEF. indicator starts blinking to show the oven is the DEFROST mode. The display counts down the time to show you how much defrosting time is left in the DEFROST mode. The oven beeps during the defrosting cycle to signal that the food needs to be turned or rearranged. When the defrosting time ends, you will hear 3 beeps.

KOR-6LBR5S(영기본).indd 11 15. 2. 13. 오후 4:52

COOKING IN ONE STAGE

1. Put food in the oven and close the door.

Power

2. Press Power button. (Select the desired power level.)

The M/W indicator appears and the display will show what you selected.

NOTE: If step 1 is omitted, the oven will cook at full power.

3. Turn the dial knob to adjust the cooking time.

The display will show what you selected.

NOTE: Your oven can be programmed for 60 minutes. (60:00)

Start

4. Press Start button.

When you press Start button, the M/W indicator starts blinking to show the oven is cooking.
The display counts down the time to show how much cooking time is left. When the cooking time ends, you will hear 3 beeps.

NOTE: Using lower power levels increases the cooking time which is recommended for foods such as cheese, milk and slow cooking of meats.

TIMER

TIMER

1. Open the door and close it again.

2. Press Timer button.

No indicator appears.

3. Turn the dial knob to set the timer.

The display will show what you selected.

NOTE: Your oven can be programmed for 60 minutes. (60:00)

Start

4. Press Start button.

When you press Start button, The display counts down the timer to show how much time is left.
when the timer ends, you will hear 3 beeps.

KOR-6LBR5S(영기본).indd 12 15. 2. 13. 오후 4:52

EASY COOKING

EASY COOK allows you to reheat for 30 seconds at 100% (full power) by simply pressing the Easy cook button.
By repeatedly pressing the Easy cook button, you can also extend reheating time to 5 minutes by 30 seconds.

Easy cook

1. Put food in the oven and close the door.
2. Press Easy cook button.

When you press Easy cook button, ":30" appears.
The oven will start working automatically.
When the cooking time ends, you will hear 3 beeps.

AUTO COOK

AUTO COOK allows you to cook or reheat many of your favorite foods by repeatedly pressing Auto cook button.

1. Put food in the oven and close the door.

Auto cook

2. Press Auto cook button.

When you press AUTO COOK button once, “AC-1” is displayed. By repeatedly pressing this button, you can select one of the four menu programs as shown in the chart below.

3. Turn the DIAL KNOB to adjust the desired quantity.

The display will show what you selected.

Start

4. Press Start button.

When you press Start button, the display changed into cooking time and the oven starts cooking. When the cooking time ends, you will hear 3 beeps.

Food	Press Autocook button	Display	Weight	Directions
Dinner Plate	once	AC-1	350g 450g	Put foods on the microwave plate and cover with vented plastic wrap.
Soup	twice	AC-2	350g 450g	Pour soup in microwave bowl or mug. Stir before serving.
Beverage	three times	AC-3	1 CUP (200ml) 2 CUPS (200mlx2) 3 CUPS (200mlx3)	Pour beverage in microwave mug and place it on the turntable. Do not cover. Stir before serving.
Fresh vegetable	four times	AC-4	200g 400g	Wash and put in casserole. Add no water if vegetables have just been washed. Cover tender vegetables with lid and stir after cooking.

KOR-6LBR5S(영기본).indd 13 15. 2. 13. 오후 4:52

CHILD SAFETY LOCK

Child safety lock feature may lock the control panel to prevent the oven from being accidentally started or used by children. To lock, press and hold TIMER button for 3 seconds. Then a long beep will sounds.
To unlock, press and hold TIMER button for 3 seconds. Then a long beep will sounds.

NOTE : When the oven gets turned off in a stand-by mode, the control panel will be automatically unlocked.

TO STOP THE OVEN WHILE THE OVEN IS OPERATING

1. Press Stop/Clear button.
   - You can restart the oven by pressing Start button.
   - Press Stop/Clear button once more to erase all instructions.
   - You must enter in new instructions.
2. Open the door.
   - You can restart the oven by closing the door and pressing Start button.

NOTE: Oven stops operating when door is opened.

WARNING - If you see arcing, press STOP/CLEAR button and correct the problem.
Arcing is the microwave term for sparks in the oven. Arcing is caused by :
a) Metal or foil touching the side of the oven.
b) Foil not molded to food (upturned edges act like antennas).
c) Metal such as twist-ties, poultry pins, or gold rimmed dishes in the microwave.
d) Recycled paper towels containing small metal pieces being used in the microwave.

BEFORE YOU CALL FOR SERVICE

Refer to following checklist, you may prevent an unnecessary service call.

* The oven doesn't work;
  1. Check that the power cord is securely plugged in.
  2. Check that the door firmly closed.
  3. Check that the cooking time is set.
  4. Check for a blown circuit fuse or tripped main circuit breaker in your house.

* Sparking in the cavity;
  1. Check that utensils are metal containers or dishes with metal trim.
  2. Check that metal skewers touch the interior walls.

If there is still a problem, contact the service station.
A list of these stations is included in the oven.

DO NOT ATTEMPT TO SERVICE THE OVEN YOURSELF!

KOR-6LBR5S(영기본).indd 14 15. 2. 13. 오후 4:52

CARING FOR YOUR MICROWAVE OVEN

The oven should be cleaned regularly and any food deposits removed.
Failure to maintain the oven in a clean condition could lead to deterioration of the surface that could adversely affect the life of the appliance and possibly result in a hazardous situation.

1. Turn the oven off before cleaning.
2. Keep the inside of the oven clean. When food spatters or spilled liquids adhere to oven walls, wipe with a damp cloth. Mild detergent may be used if the oven gets very dirty. The use of harsh detergent or abrasives is not recommended.
3. The outside oven surface should be cleaned with soap and water, rinsed and dried with a soft cloth. To prevent damage to the operating parts inside the oven, water should not be allowed to seep into the ventilation openings.
   Ensure all food deposit are cleaned off, as they can carbonized if left.
4. If the Control Panel becomes wet, clean with a soft, dry cloth. Do not use harsh detergents or abrasives on Control Panel.
5. If steam accumulates inside or around the outside of the oven door, wipe with a soft cloth. This may occur when the microwave oven is operated under high humidity conditions and in no way indicates malfunction of the unit.
6. It is occasionally necessary to remove the glass tray for cleaning. Wash the tray in warm sudsy water or in a dishwasher.

7 The roller guide and oven cavity floor should be cleaned regularly to avoid excessive noise.
Simply wipe the bottom surface of the oven with mild detergent water or window cleaner and dry.
The roller guide may be washed in mild sudsy water.

DISPOSAL OF USED ELECTRICAL & ELECTRONIC EQUIPMENT



The meaning of the symbol on the product, its accessory or packaging indicates that this product shall not be treated as household waste. Please, dispose of this equipment at your applicable collection point for the recycling of electrical & electronic equipments waste. In the European Union and Other European countries which there are separate collection systems for used electrical and electronic product. By ensuring the correct disposal of this product, you will help prevent potentially hazardous to the environment and to human health, which could otherwise be caused by unsuitable waste handling of this product. The recycling of materials will help conserve natural resources. Please do not therefore dispose of your old electrical and electronic equipment with your household waste. For more detailed information about recycling of this product, please contact your local city office, your household waste disposal service or the shop where you purchased the product.

KOR-6LBR5S(영기본).indd 15 15. 2. 13. 오후 4:52

QUESTIONS AND ANSWERS

* **Q :** Can the oven be used with the glass tray or roller guide removed?
  A : No. Both the glass tray and roller guide must always be used in the oven before cooking.

* **Q :** Can I open the door when the oven is operating?
  A : The door can be opened anytime during the cooking operation. Then microwave energy will be instantly switched off and the time setting will maintain until the door is closed and START is pressed.

* **Q :** Why do I have moisture in my microwave oven after cooking?
  A : The moisture on the side of your microwave oven is normal. It is caused by steam from cooking food hitting the cool oven surface.

* **Q :** Does microwave energy pass through the viewing screen in the door?
  A : No. The metal screen bounces back the energy to the oven cavity. The holes are made to allow light to pass through. They do not let microwave energy pass through.

* **Q :** Why do eggs sometimes pop?
  A : When baking or poaching eggs, the yolk may pop due to steam build-up inside the yolk membrane. To prevent this, simply pierce the yolk with a toothpick before cooking. Never cook eggs without piercing their shells.

* **Q :** Why this standing time recommended after the cooking operation has been completed?
  A : Standing time is very important.
  With microwave cooking, the heat is in the food, not in the oven. Many foods build up enough internal heat to allow the cooking process to continue, even after the food is removed from the oven. Standing time for joints of meat, large vegetables and cakes is to allow the inside to cook completely, without overcooking the outside.

* **Q :** What does “standing time” mean?
  A : “Standing time” means that food should be removed from the oven and covered for additional time to allow it to finish cooking. This frees the oven for other cooking.

* **Q :** Why does my oven not always cook as fast as the microwave cooking guide says?
  A : Check your cooking guide again, to make sure you’ve followed directions exactly ; and to see what might cause variations in cooking time. Cooking guide times and heat settings are suggestions, to help prevent over-cooking... the most common problem in getting used to a microwave oven. Variations in the size, shape and weights and dimensions could require longer cooking time. Use your own judgement along with the cooking guide suggestions to check whether the food has been properly cooked just as you would do with a conventional cooker.

* **Q :** Will the microwave oven be damaged if it operates while empty?
  A : Yes. Never run it empty.

* **Q :** Can I operate my microwave oven without the turntable or turn the turntable over to hold a large dish?
  A : No. If you remove or turn over the turntable, you will get poor cooking results. Dishes used in your oven must fit on the turntable.

* **Q :** Is it normal for the turntable to turn in either direction?
  A : Yes. The turntable rotates clockwise or counterclockwise, depending on the rotation of the motor when the cooking cycle begins.

* **Q :** Can I pop popcorn in my microwave oven? How do I get the best results?
  A : Yes. Pop packaged microwave popcorn following manufactures guidelines or use the preset POPCORN pad. Do not use regular paper bags. Use the “listening test” by stopping the oven as soon as the popping slows to a “pop” every 1 or 2 seconds. Do not repop unpopped kernels. Do not pop popcorn in glass cookware.

KOR-6LBR5S(영기본).indd 16 15. 2. 13. 오후 4:52

COOKING INSTRUCTIONS

Only use utensils that are suitable for use in microwave ovens.
To cook food in the microwave oven, the microwaves must be able to penetrate the food, without being reflected or absorbed by the dish used.
Care must therefore be taken choosing the utensil. If the utensil is marked microwave-safe, you do not need to worry.
The following table lists various utensil and indicates whether and how they should be used in a microwave oven.

Utensil	Safe	Comments
Aluminium foil	▲	Can be used in small quantities to protect areas against overcooking. Arcing can occur if the foil is too close to the oven wall or if too much foil is used.
Crust plate	●	Do not preheat for more than 8minutes.
China and earthenware	●	Porcelain, pottery, glazed earthenware and bone china are usually suitable, unless deco-rated with a metal trim.
Disposable polyester cardboard dishes	●	Some frozen foods are packaged in these dishes.
Fast-food packaging		
• Polystyrene cups containers	●	Can be used to warm food. Overheating may cause the polystyrene to melt.
• Paper bags or newspaper	×	May catch fire.
• Recycled paper or metal trims	×	May cause arcing.
Glassware		
• Oven-to-table ware	●	Can be used, unless decorated with a metal trim.
• Fine glassware	●	Can be used to warm foods or liquids. Delicate glass may break or crack if heated suddenly.
• Glass jars	●	Must remove the lid. Suitable for warming only.
Metal		
• Dishes	×	May cause arcing or fire.
• Freezer bag twist ties	×	
Paper		
• Plates, cups, napkins and Kitchen paper	●	For short cooking times and warming. Also to absorb excess moisture.
• Recycled paper	×	May cause arcing.
Plastic		
• Containers	●	Particularly if heat-resistant thermoplastic. Some other plastics may warp or discolour at high temperatures. Do not use Melamine plastic.
• Cling film	●	Can be used to retain moisture. Should not touch the food. Take care when removing the film as hot steam will escape.
• Freezer bags	▲	Only if boilable or oven-proof. Should not be airtight. Prick with a fork, if necessary.
Wax or grease-proof paper	●	Can be used to retain moisture and prevent spattering.

● : Recommended use
▲ : Limited Use
× : Not Recommended

KOR-6LBR5S(영기본).indd 17 15. 2. 13. 오후 4:52

USE YOUR MICROWAVE OVEN SAFELY

General Use

Do not attempt to defeat or tamper with safety interlocks.
Do not place any object between the oven front frame and the door or allow residue to build up on sealing surfaces. Wipe with a mild detergent, rinse and dry. Never use abrasive powders or pads.
Do not subject the oven door to strain or weight such as a child hanging on an open door.
This could cause the oven to fall forward resulting in injury to you and damage to the oven.
Do not operate the oven if door seals or sealing surfaces are damaged; or if door is bent; or if hinges are loose or broken.
Do not operate the oven empty. This will damage the oven.
Do not attempt to dry clothes, newspapers or other materials in the oven. They may catch on fire.
Do not use recycled paper products as they may contain impurities which may cause sparks or fires.
Do not hit or strike the control panel with hard objects. This can damage the oven.

Food

Always use the minimum recipe cooking time. It is better to undercook rather than overcook foods.
Undercooked foods can be returned to the oven for more cooking. If food is overcooked, nothing can be done.
Heat small quantities of food or foods with low moisture carefully. These can quickly dry out, burn or catch on fire.
Do not heat eggs in the shell. Pressure may build up and eggs can explode.
Potatoes, apples, egg yolks and sausages are examples of food with non-porous skins.
These must be pierced before cooking to prevent bursting.
Do not attempt to deep fat fry in your microwave oven.
Always allow a standing time of at least 20 seconds after the oven has been switched off to allow the temperature to even out, stir during heating, if necessary, and ALWAYS stir after heating. To prevent eruptive boiling and possible scalding, you should put a spoon or glass stick into the beverages and stir before, during and after heating.
Do not leave the oven unattended while popping corn.
Do not pop corn in a paper bag unless it is the commercially prepared Microwave Popcorn product. The kernels can overheat and ignite a brown paper bag.
Do not put packaged Microwave Popcorn bags directly on the oven tray. Place the package on a microwave safe glass or ceramic plate to avoid overheating and cracking the oven tray.
Do not exceed the Microwave Popcorn manufacturers suggested popping time.
Longer popping does not yield more popcorn but it can result in scorch, burn of fire. Remember, the Popcorn bag and tray can be too hot to handle. Remove with caution and use pot holders.
Ensure all food deposits are cleaned off, as they can carbonize if left.

WARNING

*If you see arcing, press the **STOP/CLEAR** button and correct the problem.*

Arcing is the microwave term for sparks in the oven.
Arcing is caused by:

- Metal or foil pressing the side of the oven.
- Foil not molded to food (upturned edges act like antennas).
- Metal, such as twist-ties, poultry pins, or gold rimmed dishes, in the microwave.
- Recycled paper towels containing small metal pieces being used in the microwave.

KOR-6LBR5S(영기본).indd 18 15. 2. 13. 오후 4:52

MICROWAVING PRINCIPLES

Microwave energy has been used in this country to cook and reheat food since early experiments with RADAR in World War ll. Microwaves are present in the atmosphere all the time, both naturally and manmade sources. Manmade sources include radar, radio, television, telecommunication links and car phones.

HOW MICROWAVES COOK FOOD

Microwave oven is a Group 2 ISM equipment in which radiofrequency energy is intentionally generated and used in the form of electromagnetic radiation for the treatment of material. This oven is a Class B equipment suitable for use in domestic establishments and in establishments directly connected to a low voltage power supply network which supplies buildings used for domestic purposes.

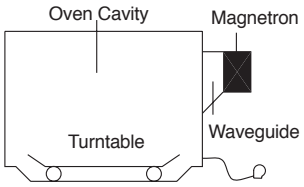

In a microwave oven, electricity is converted into microwave by the MAGNETRON.

▶TRANSMISSION

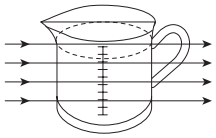

Then they pass through the cooking containers to be absorbed by the water molecules in the food, all foods contain water to a more or lesser extent.

▶REFLECTION

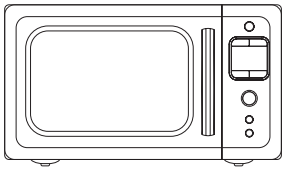

The microwaves bounce off the metal walls and the metal door screen.

▶ABSORPTION

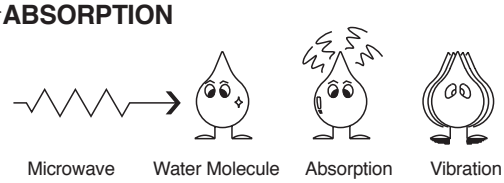

The microwaves cause the water molecules to vibrate which causes FRICTION, i.e. HEAT. This heat then cooks the food. Microwaves are also attracted to fat and sugar particles, and foods high in these will cook more quickly.

CONVERSION CHARTS

WEIGHT MEASURES	
15 g	1/2 oz.
25 g	1 oz.
50 g	2 oz.
100 g	4 oz.
175 g	6 oz.
225 g	8 oz.
450 g	1 lb.

VOLUME MEASURES	
30 ml	1 fl.oz.
100 ml	3 fl.oz.
150 ml	5 fl.oz. (1/4 pt)
300 ml	10 fl.oz. (1/2 pt)
600 ml	20 fl.oz. (1pt)

SPOON MEASURES	
1.25 ml	1/4 tsp
2.5 ml	1/2 tsp
5 ml	1 tsp
15 ml	1 tbsp

FLUID MEASUREMENTS		
1 Cup	= 8 fl.oz.	= 240 ml
1 Pint	= 16 fl.oz. (UK 20 fl.oz.)	= 480 ml (UK 560 ml)
1 Quart	= 32 fl.oz. (UK 40 fl.oz.)	= 960 ml (UK 1120 ml)
1 Gallon	= 128 fl.oz. (UK 160 fl.oz.)	= 3840 ml (UK 4500 ml)

KOR-6LBR5S(영기본).indd 19 15. 2. 13. 오후 4:52

COOKING TECHNIQUES

STANDING TIME

Dense foods e.g. meat, jacket potatoes and cakes, require standing time(inside or outside of the oven) after cooking, to allow heat to finish conducting to cook the centre completely. Wrap meat joints and jacket potatoes in aluminium foil while standing. Meat joints need approx. 10-15 minutes, jacket potatoes 5 minutes. Other foods such as plated meal, vegetables, fish etc require 2-5 minutes standing. After defrosting food, standing time should also be allowed. If food is not cooked after standing time, return to the oven and cook for additional time.

MOISTURE CONTENT

Many fresh foods e.g. vegetables and fruit, vary in their moisture content throughout the season, particularly jacket potatoes. For this reason cooking times may have to be adjusted. Dry ingredients e.g. rice, pasta, can dry out during storage so cooking times may differ.

DENSITY

Porous airy foods heat more quickly than dense heavy foods.

CLING FILM

Cling film helps keep the food moist and the trapped steam assists in speeding up cooking times. Pierce before cooking to allow excess steam to escape. Always take care when removing cling film from a dish as the build-up of steam will be very hot.

SHAPE

Even shapes cook evenly. Food cooks better by microwave when in a round container rather than square.

SPACING

Foods cook more quickly and evenly if spaced apart.

NEVER pile foods on top of each other.

STARTING TEMPERATURE

The colder the food, the longer it takes to heat up. Food from a fridge takes longer to reheat than food at room temperature.

LIQUIDS

All liquids must be stirred before and during heating. Water especially must be stirred before and during heating, to avoid eruption. Do not heat liquids that have previously been boiled. DO NOT OVERHEAT.

TURNING & STIRRING

Some foods require stirring during cooking. Meat and poultry should be turned after half the cooking time.

ARRANGING

Individual foods e.g. chicken portions or chops, should be placed on a dish so that the thicker parts are towards the outside.

QUANTITY

Small quantities cook faster than large quantities, also small meals will reheat more quickly than large portions.

PIERCING

The skin or membrane on some foods will cause steam to build up during cooking. These foods must be pierced or a strip of skin should be peeled off before cooking to allow the steam to escape. Eggs, potatoes, apples, sausages etc, will all need to be pierced before cooking. DO NOT ATTEMPT TO BOIL EGGS IN THEIR SHELLS.

COVERING

Cover foods with microwave cling film or a lid. Cover fish, vegetables, casseroles, soups. Do not cover cakes, sauces, jacket potatoes or pastry items.

KOR-6LBR5S(영기본).indd 20 15. 2. 13. 오후 4:52

DEFROSTING GUIDE

- ▶ Do not defrost covered meat. Covering might allow cooking to take place. Always remove outer wrapper and tray. Use only containers that are microwave-safe.
- ▶ Begin defrosting whole poultry breast-side-down. Begin defrosting roasts fat-side-down.
- ▶ The shape of the package alters the defrosting time. Shallow rectangular shapes defrost more quickly than a deep block.
- ▶ After 1/3 of the defrost time has elapsed, check the food. You may wish to turn over, break apart, rearrange or remove thawed portions of the food.
- ▶ During defrost, the oven will prompt you to turn the food over. At this point, open oven door and check the food. Follow the techniques listed below for optimum defrost results.
  Then, close oven door, press the START button to complete defrosting.
- ▶ When defrosted, food should be cool, but softened in all areas. If still slightly icy, return to microwave oven very briefly, or let stand a few minutes. After defrosting, allow food to stand 5-60 minutes if there are any icy areas.
  Poultry and fish may be placed under running cool water until defrosted
- ➪ ***Turn over*** : Roast, ribs, whole poultry, turkey breasts, hot dogs, sausages, steaks, or chops.
- ➪ ***Rearrange*** : Break apart or separate steaks, chops, hamburger patties, ground meat, chicken or seafood pieces, chunks of meat such as stew beef.
- ➪ ***Shield*** : Use small strips of aluminum foil to protect thin areas or edges of unevenly shaped foods such as chicken wings. To prevent arcing, do not allow foil to come within 1-inch of oven walls or door.
- ➪ ***Remove*** : To prevent cooking, thawed portions should be removed from the oven at this point. This may shorten defrost time for food weighing less than 3 lbs.(1350g).

DEFROSTING CHART

Item & Weight	Defrosting Time	Standing Time	Special Techniques
BEEF			
Minced beef 1 lb./450g	7-9 min.	15-20 min.	Break apart and remove thawed portions with fork.
Stew Meat 1 1/2 lbs./675g	11-13 min.	25-30 min.	Separate and rearrange once.
Patties 4(4oz./110g)	6-8 min.	15-20 min.	Turn over after half the time.
PORK			
Spareribs 1 lb./450g	6-8 min.	25-30 min.	Separate and rearrange once.
Chops 4(5oz./125g)	7-9 min.	25-30 min.	Separate and turn over once.
Minced pork 1 lb./450g	7-9 min.	15-20 min.	Break apart and remove thawed portions with fork.
POULTRY			
Whole Chicken 2 1/2 lbs./1125g	18-20 min.	45-90 min.	Break side down. Turn over after half the time. Shield as needed.
Chicken Breasts 1 lbs./450g	7-9 min.	15-30 min.	Separate and rearrange once.
Fryer Chicken(cut up) 2 lbs./900g	14-17 min.	25-30 min.	Separate and rearrange once.
Chicken Thights 1 1/2 lbs./675g	10-12 min.	15-30 min.	Separate and rearrange once.
FISH & SEAFOOD			
Whole Fish 1 lb./450g	6-8 min.	15-20 min.	Turn over after half the time. Shield as needed.
Fish Fillets 1 1/2 lb./675g	9-11 min.	15-20 min.	Separate and turn over once.
Shrimp 1/2 lb./225g	2-3 min.	15-20 min.	Separate and rearrange once.

* The times are approximate because freezer temperatures vary.

KOR-6LBR5S(영기본).indd 21 15. 2. 13. 오후 4:52

COOKING & REHEATING CHART

Cooking chart

Item	Power Level	Cooking Time Per lb./450g	Special Instruction
MEAT			
Beef joint -Rare	P-80	8-10 min.	- Chilled meat and poultry should be removed from the refrigerator at least 30 minutes before cooking. - Always let the meat and poultry stand, covered after cooking.
-Medium	P-80	9-11 min.	
-well done	P-80	11-13 min.	
Pork Joint	P-HI	12-15 min.	
Bacon joint	P-HI	9-10 min.	
POULTRY			
Whole chicken	P-HI	7-9 min.	
Portions chicken	P-80	5-7 min.	
Breast (boned)	P-80	6-8 min.	
FISH			
Fish Fillets	P-HI	4-6 min.	- Brush a little oil or melted butter over the fish, or add 15~30ml(1-2 tbsp) lemon juice, wine, stock, milk or water. - Always let the fish stand, covered, after cooking
Whole Mackerel, Cleaned and prepared	P-HI	4-6 min.	
Whole Trout, Cleaned & Prepared	P-HI	5-7 min.	
Salmon steaks	P-HI	5-7 min.	

NOTE : The above times should be regarded only as a guide. Allow for difference in individual tastes and preferences. The times may vary due to the shape, cut, and composition of the food.
Frozen meat, poultry and fish must be thoroughly thawed before cooking.

KOR-6LBR5S(영기본).indd 22 15. 2. 13. 오후 4:52

Reheating chart

- Baby food particularly needs to be checked carefully before serving to prevent burns.
- When heating pre-packaged ready-cooked foods, always follow the pack instructions carefully.
- If you freeze foods which were bought from the fresh or chilled counters, remember that they should be thoroughly thawed before following the heating instructions on the pocket.

  It's worth putting a note on them so that other members of the household will remember too.
- Remember metal ties and transfer all food from foil containers before reheating.
- Chilled(refrigerated) food takes longer to reheat than food at room temperature (such as just-cooled food or food from the store cupboard).
- All foods should be reheated using full microwave power.

Item	Cooking time	Special Instructions
Baby food 128g jar	30 sec.	Empty into a small serving bowl. Stir well once or twice during heating. Before serving, check the temperature carefully.
Baby milk 100ml / 4fl.oz. 225ml / 8fl.oz.	 20-30 sec. 40-50 sec.	 Stir or shake well and pour into a sterilized bottle. Before serving, shake well and check the temperature carefully.
Sandwich roll or bun 1 roll	20-30 sec.	Wrap in paper towel and place on glass microwaveable rack. ***Note : Do not use recycled paper towels.** As is may contain metal particles.
Lasagne 1 serving (10 1/2 oz./300g)	4-6 min.	Place lasagne on microwaveable plate. Cover with plastic wrap and vent.
Casserole 1 cup 4 cups	 1 1/2-3 min. 5-7 min.	 Cook covered in a microwaveable dish. Stir once halfway through cooking.
Mashed potatoes 1 cup 4 cups	 2-3 min. 6-8 min.	 Cook covered in a microwaveable dish. Stir once halfway through cooking.
Baked beans 1 cup	2-3 min.	Cook covered in a microwaveable dish. Stir once halfway through cooking.
Ravioli or pasta in sauce 1 cup 4 cups	 3-4 min. 7-10 min.	 Cook covered in a microwaveable dish. Stir once halfway through cooking.

KOR-6LBR5S(영기본).indd 23 15. 2. 13. 오후 4:52

VEGETABLE CHART

Use a suitable glass pyrex bowl with lid. Add 30-45ml cold water(2-3 tbsp.) for every 250g unless another water quantity is recommended - see table. Cook covered for the minimum time - see table. Continue cooking to get the result you prefer. Stir once during and once after cooking. Add salt, herbs or butter after cooking. Cover during a standing time of 3 minutes.
Hint : cut the fresh vegetables into even sized pieces. The smaller they are cut, the quicker they will cook.
All vegetables should be cooked using full microwave power.

Cooking Guide for fresh vegetables

Vegetables	Weight	Time	Comments
Broccoli	1/2 lb./250g 1 lb./500g	2-3 min 4-6 min	Prepare even sized florets. Arrange the stems to the centre.
Brussels sprouts	1/2 lb./250g	3-4 min	Add 60-75ml(5-6tbsp.) water.
Carrots	1/2 lb./250g	2-3 min	Cut carrots into even sized slices.
Cauliflower	1/2 lb./250g 1 lb./500g	2-3 min 4-6 min	Prepare even sized florets. Cut big florets into halves. Arrange stems to the centre.
Courgettes	1/2 lb./250g	2-3 min	Cut courgettes into slices. Add 30ml(2tbsp.) water or a knob of butter. Cook until just tender.
Aubergine	1/2 lb./250g	2-3 min	Cut aubergine into small slices and sprinkle with 1 tablespoon lemon juice.
Leeks	1/2 lb./250g	2-3 min	Cut leeks into thick slices.
Mushrooms	0.3 lb./125g 1/2 lb./250g	1-2 min 2-4 min	Prepare small whole or sliced mushrooms. Do not add any water. Sprinkle with lemon juice. Spice with salt and pepper. Drain before serving.
Onions	1/2 lb./250g	2-3 min	Cut onions into slices or halves. Add only 15ml(1tbsp.) water.
Pepper	1/2 lb./250g	2-4 min	Cut pepper into small slices.
Potatoes	1/2 lb./250g 1 lb./500g	3-5 min 7-9 min	Weigh the peeled potatoes and cut them into similar sized halves or quarters.
Turnip cabbage	1/2 lb./250g	3-5 min	Cut turnip cabbage into small cubes.

Cooking Guide for frozen vegetables

Vegetables	Weight	Time	Instructions
Spinach	0.3 lb./125g	2-3 min	Add 15ml(1tbsp.) cold water.
Broccoli	1/2 lb./250g	3-4 min	Add 30ml(2 tbsp.) cold water.
Peas	1/2 lb./250g	3-4 min	Add 15ml(1 tbsp.) cold water.
Green beans	1/2 lb./250g	4-5 min	Add 30ml(2t tbsp.) cold water.
Mixed vegetables (carrots/peas/corn)	1/2 lb./250g	3-4 min	Add 15ml(1ttbsp.) cold water.
Mixed vegetables (Chinese style)	1/2 lb./250g	4-5 min	Add 15ml(1 tbsp.) cold water.

KOR-6LBR5S(영기본).indd 24 15. 2. 13. 오후 4:52

RECIPES

TOMATO & ORANGE SOUP

1 oz.(25g) butter
1 medium onion, chopped
1 large carrot & 1 large potato, chopped
1 3/4lb(800g) canned, chopped tomatoes
juice and grated rind of 1 small orange
1 1/2pints(900ml) hot vegetable stock
salt and pepper to taste

1. Melt the in a large bowl on P-HI for 1 minute.
2. Add the onion, carrot and potato and cook on P-HI for 6 minutes. stir halfway through cooking.
3. Add the tomatoes, orange juice, orange rind and stock. Mix thoroughly. Season with salt and pepper to taste. Cover the bowl and cook on P-HI for 18 minutes. stir 2-3 times during cooking, until the vegetables are tender.
4. Blend and serve immediately.

FRENCH ONION SOUP

1 large onions, sliced
1 tbsp (15ml) corn oil
2 oz.(50g) plain flour
2 pints(1.2 liters) hot meat
or vegetable stock
salt and pepper to taste
2 tbsp (30ml) parsley, chopped
4 thick slices French bread
2 oz.(50g) cheese, grated

1. Place the onion and oil a bowl, mix well and cook on P-HI for 2 minutes.
2. Stir in the flour to make a paste and gradually add stack. Season and add the parsley.
3. Cover the bowl and cook on P-60 for 20 minutes.
4. Pour the soup into serving bowls, submerge bread and sprinkle generously with cheese.
5. Cook on P-80 for 2 minutes, until the cheese has melted.

STIR FRIED VEGETABLES

1 tbsp(15ml) sunflower oil
2 tbsp (30ml) soy sauce
1 tbsp (15ml) sherry
1"(2.5cm) root ginger,
peeled and finely grated
2 medium carrots, cut into fine strips
4 oz.(100g) button mushrooms,
chopped
2 oz.(50g) beansprouts
4 oz.(100g) mange-tout
1 red pepper, seeded and thinly sliced
4 spring onions, chopped
4 oz.(100g) canned water chestnuts,
sliced
1/4 head of chinese leaves, thinly sliced

1. Place the oil, soy sauce, sherry, ginger, garlic and carrots in a large bowl, mix thoroughly
2. Cover and cook on P-HI for 5-6 minutes, stirring once.
3. Add the button mushrooms, beansprouts, mange-tout, red pepper, spring onions, water chestnuts and chinese leaves. Mix thoroughly.
4. Cook on P-HI for 6-7 minutes, until the vegetables are tender. Stir 2-3 times during cooking.

Stir fried vegetables are ideally served with meat or fish.

HONEYED CHICKEN

4 boneless chicken breasts
2 tbsp(30ml) clear honey
1 tbsp(15ml) whole grain mustard
1/2 tsp(2.5ml) dried tarragon
1 tbsp(15ml) tomato puree
1/4 pint(150ml) chicken stock

1. Place the chicken breasts in a casserole dish.
2. Mix all remaining ingredients together and pour over the chicken. Salt and pepper to taste.
3. Cook on P-HI for 13-14 minutes. Rearrange and coat the chicken with the sauce twice during cooking.

KOR-6LBR5S(영기본).indd 25 15. 2. 13. 오후 4:52

BLUE CHEESE & CHIVE JACKETS

2 baking potatoes,
(approx.9 oz.(250g) each)
2 oz.(50g) butter
4 oz.(100g) blue cheese, chopped
1 tbsp(15ml) fresh chives, chopped
2 oz.(50g) mushrooms, sliced
salt and pepper to taste

1. Prick each potato in several places. Cook on P-HI for 12-13 minutes. Halve and scoop the flesh into a bowl, add the butter, cheese, chives, mushrooms, salt and pepper, mix thoroughly.
2. Pile mixture into the potato skins and place in a flan dish, on the rack.
3. Cook on P-60 for 10 minutes.

WHITE SAUCE

1 oz.(25g) butter
1 oz.(25g) plain flour
1/2 pint(300ml) milk
salt and pepper to taste

1. Place the butter in a bowl and cook on P-HI for 1 minute, until melted.
2. Stir in the flour and whisk in the milk. Cook on P-HI for 4-5 minutes, stirring every 2 minutes until thick and smooth. Season with salt and pepper to taste.

STRAWBERRY JAM

1 1/2 lb.(675g) strawberries, hulled
3 tbsp(45ml) lemon juice
1 1/2 lb.(675g) caster sugar

1. Place strawberries and lemon juice in a very large bowl, heat on P-HI for 5 minutes, or until the fruit has softened. Add sugar, mix well.
2. Cook on P-80 for 20-25 minutes, until setting point*is reached, stir every 4-5 minutes.
3. Pour into hot, clean jars. Cover, seal and label.

** setting point : To determine setting point, place 1 tsp(5ml)jam onto chilled saucer. Allow to stand for 1 minute. Move surface of jam gently with your finger, if the surface wrinkles setting point has been reached.*

PLAIN MICROWAVE CAKE

4 oz.(100g) margarine
4 oz.(100g) sugar
1 eggs
4 oz.(100g) self raising flour, sifted
2-3 tbsp(30-45ml) milk

1. line the base of 8" (20.4cm) cake dish with grease-proof paper.
2. Cream the margarine and sugar together until light and fluffy. Beat in the eggs and fold in the sifted flour alternately with the milk.
3. Pour into prepared container. Cook on P-HI for 4-5 minutes, until a skewer comes out cleanly.
4. Leave the cake to stand for 5 minutes before turning out.

OMELETTS

1/2 oz.(15g) butter
4 eggs
6 tbsp(90ml) milk
salt & pepper

1. Whisk together eggs and milk. Season.
2. Place butter in 10"(26cm) flan dish. Cook on P-HI for 1 minute, until melted. Coat the dish with the melted butter.
3. Pour omelette mixture into flan dish. Cook on P-HI for 2 minutes. whisk mixture and cook again on P-HI for 1 minutes.

KOR-6LBR5S(영기본).indd 26 15. 2. 13. 오후 4:52

SCRAMBLED EGG

1/2 oz.(15g) butter
2 eggs
2 tbsp(30ml) milk
salt & pepper

1. Melt the butter in a bowl on P-HI for 1 minute.
2. Add the eggs, milk and seasoning and mix well.
3. Cook on P-HI for 3 minutes, stirring every 30 seconds.

SAVORY MINCE

1 small onion, diced
1 clove garlic, crushed
1 tsp(5ml) oil
7 oz.(200g) can chopped tomatoes
1 tbsp(15ml) tomato puree
1 tsp(5ml) mixed herbs
8 oz.(225g) minced beef
salt and pepper

1. Place onion, garlic and oil in casserole, and cook on P-HI for 2 minutes or until soft.
2. Place all other ingredients in casserole. Stir well.
3. Cover and cook on P-HI for 5 minutes then P-60 for 10-15 minutes or until the meat is cooked.

KOR-6LBR5S(영기본).indd 27 15. 2. 13. 오후 4:52