BH2801/BH3801/BH2401/BH3501/ BH2801N/BH3801N/BH3801D RS232/LAN Control Protocol Installation Guide

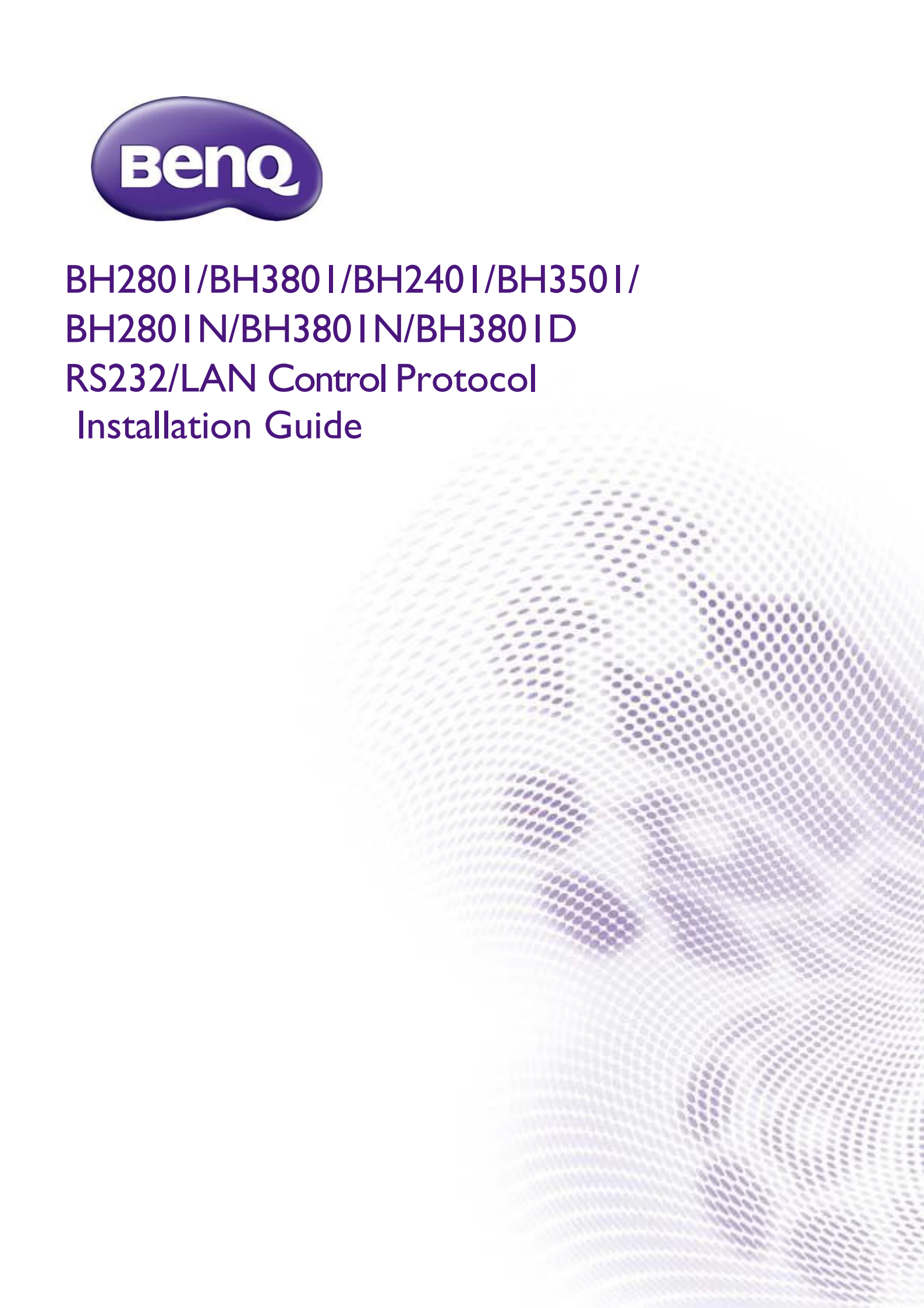

Table of Contents

Introduction 3
Wire arrangement 3
RS232 pin assignment 3
Communication setting 4
Command message reference 4
Connections and communication settings 4
RS232 serial port connection 4
RS232 via LAN 5
RS232 via HDBaseT 5
Protocol Command Description 5
Set-function listing 6
Set-function description 6
Set-function format 6
Set-function table 8
Get-function listing 12
Get-function description 12
Get-function format 13
PC Get-function command to LCD Monitor 21

Introduction

This document describes the hardware interface spec and software protocols of RS232 interface communication between Commercial Display and PC or other control unit with RS232 protocol. This set protocol allow users to assign the ID in the command to control the specify ID monitor. The set protocol contains two sections command: Set-Function and Get-Function

In this document, "PC" represents all the control units that can send or receive the RS232 protocol command.

Wire arrangement

Wire Arrangement		
P1	Color	P2
1	Black	1
2	Brown	3
3	Red	2
4	Orange	4
5	Yellow	5
6	Green	6
7	Blue	7
8	Purple	8
9	Gray	9
Case	Drain wire	Case

RS232 pin assignment



Pin	Description	Pin	Description
1	NC	2	RXD
3	TXD	4	NC
5	GND	6	NC
7	RTS	8	CTS
9	NC		

Use of crossover (null modem) cable requires use with PC.

Communication setting

Baud rate select: 9600bps (fixed)/ Data bits: 8 bits (fixed)

Parity: None (fixed)/ Stop Bits: 1(fixed)

Command message reference

PC sends to Monitor command packet followed by "CR". Every time PC sends control command to the Monitor, the Monitor shall response as follows:

1. If the message is received correctly, it will send "+" (02Bh) followed by "CR" (00Dh).
2. If the message is received incorrectly, it will send "-" (02Dh) followed by "CR" (00Dh).

Connections and communication settings

Choose one of the connections and set up properly before RS232 control.

RS232 serial port connection

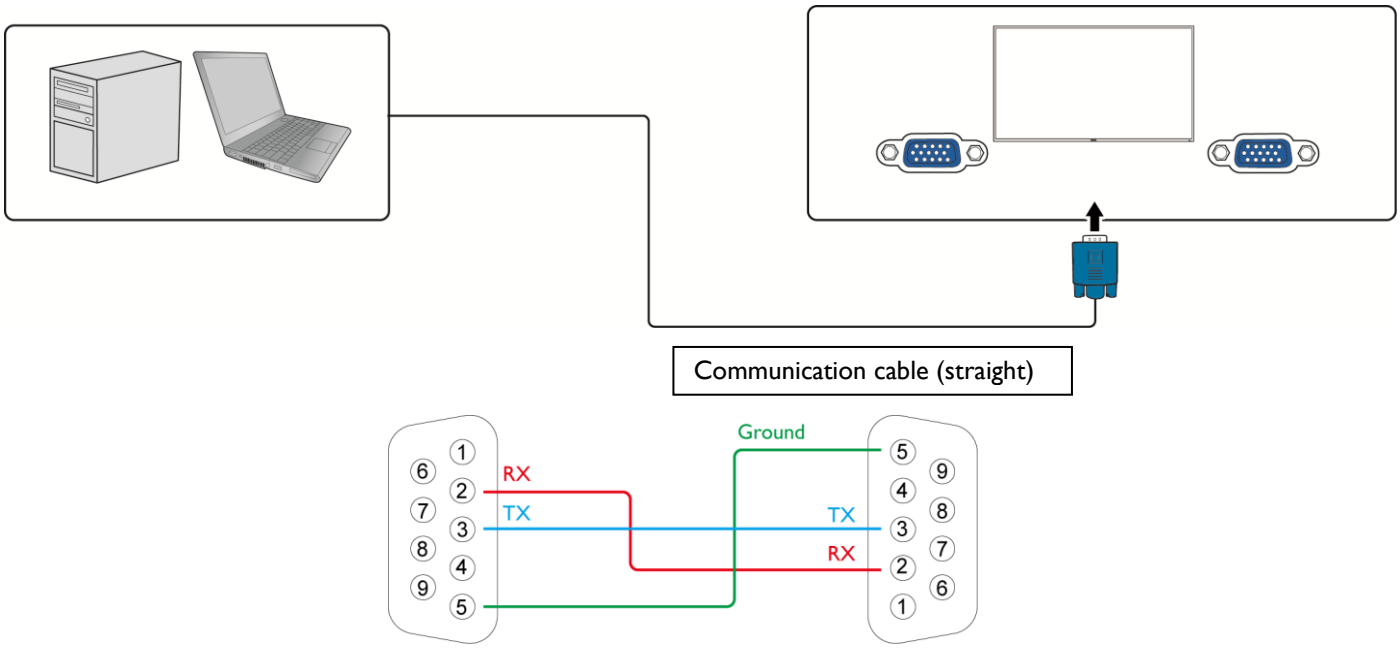

RS232 via LAN

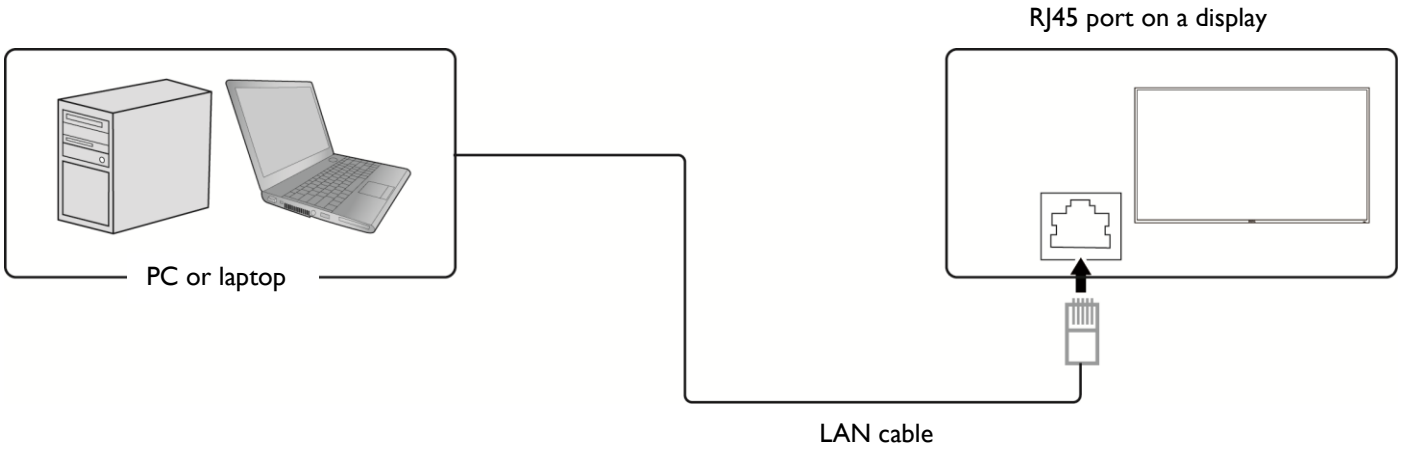

Find the Wired LAN IP address of the connected display from the OSD menu and make sure the display and the computer are within the same network.

IP Protocol Port: 4660

RS232 via HDBaseT

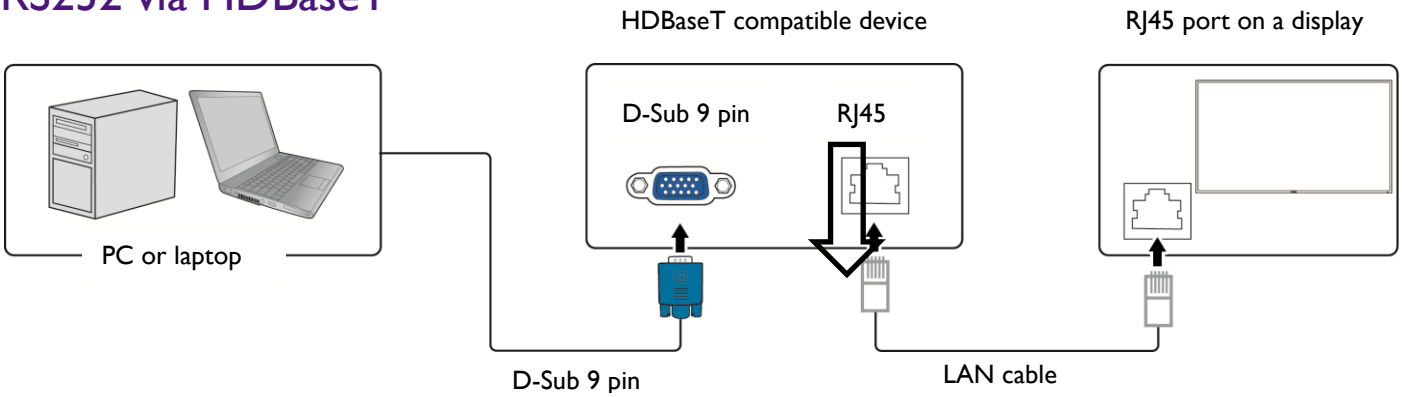

Protocol Command Description

Item	Description
Length	Total Bytes of Message excluding "CR"
Display ID	Identification for each of display
Command Type	Identify command type, "s" (0x73h): Set Command "g" (0x67h): Get Command "r" (0x72h): Reply Command "+" (0x2Bh): Valid command Reply "-" (0x2Dh): Invalid command Reply
Command	Function command code: One byte ASCII code
Value [1~3]	Three bytes ASCII that defines the value

CR	0x0D

Set-function listing

The PC can control the LCD Monitor for specific actions. The Set-Function command allows you to control the LCD monitor behavior in a remote sit through the RS232 port. The Set-Function packet format consists of 11 bytes.

Set-function description

Item	Description
Length	Total Bytes of Message excluding "CR"
Display ID	Identification for each of display display ID is “01” for LAN control
Command Type	Identify command type, "s" (0x73h): Set Command
Command	Function command code: One byte ASCII code
Value [1~3]	Three bytes ASCII that defines the value
CR	0x0D

Set-function format

Send: (Command Type="s")

Name	Length	ID	Command type	Command	Value1	Value2	Value3	CR
Byte count	1 Byte	2 Byte	1 Byte	1 Byte	1 Byte	1 Byte	1 Byte	1 Byte
Bytes order	1	2~3	4	5	6	7	8	9

Reply: (Command Type="+" or "-")

Name	Length	ID	Command type	CR
Byte count	1 Byte	2 Byte	1 Byte	1 Byte
Bytes order	1	2~3	4	5

Example 1: Set Brightness as 76 for Display -02 and this command is valid.

Send (Hex Format)

Name	Length	ID	Command type	Command	Value1	Value2	Value3	CR

Hex	0x38	0x30 0x32	0x73	0x24	0x30	0x37	0x36	0x0D

Reply (Hex Format)

Name	Length	ID	Command type	CR
Hex	0x34	0x30 0x31	0x2B	0x0D

Example 2: Set Brightness as 176 for Display -02 and this command is NOT valid.

Send (Hex Format)

Name	Length	ID	Command type	Command	Value1	Value2	Value3	CR
Hex	0x38	0x30 0x32	0x73	0x24	0x31	0x37	0x36	0x0D

Reply (Hex Format)

Name	Length	ID	Command type	CR
Hex	0x34	0x30 0x31	0x2D	0x0D

Example 3: Set Tint as 32 for Display -03 and this command is valid.

Send (Hex Format)

Name	Length	ID	Command type	Command	Value1	Value2	Value3	CR
Hex	0x38	0x30 0x33	0x73	0x27	0x30	0x33	0x32	0x0D

Reply (Hex Format)

Name	Length	ID	Command type	CR

Hex	0x34	0x30 0x31	0x2B	0x0D

Example 4: Set Tint as 75 for Display -03 and this command is NOT valid.

Send (Hex Format)

Name	Length	ID	Command type	Command	Value1	Value2	Value3	CR
Hex	0x38	0x30 0x33	0x73	0x27	0x30	0x37	0x35	0x0D

Reply (Hex Format)

Name	Length	ID	Command type	CR
Hex	0x34	0x30 0x31	0x2D	0x0D

Example 5: Set Brightness as 76 for all Display and this command is valid.

Send (Hex Format)

Name	Length	ID	Command type	Command	Value1	Value2	Value3	CR
Hex	0x38	0x39 0x39	0x73	0x24	0x30	0x37	0x36	0x0D

No Reply.

Set-function table

Set Function	Len	Cmd Type	Cmd Code (Hex)	RS232 (ASCII Bytes)	LAN (ASCII Bytes)
Power	8	s	21	000 : ---- / Monitor Off	000 :Monitor Off (Blacklight off +mute)
				001 : On / Monitor On	001 :Monitor On (Blacklight on + last status)
				002 : Standby (or android off)	002 : Standby (android off)
				003 : Reboot System	003 : Reboot System
Video Source	8	s	22	001 : HDMI	001 : HDMI
				101 : android	101 : android

Contrast	8	s	23	000 ~ 100	000 ~ 100
Brightness	8	s	24	000 ~ 100	000 ~ 100
Sharpness	8	s	25	000 ~ 100	000 ~ 100
Aspect Ratio	8	s	31	000 : Full	000 : Full
				002 : 1:1	002 : 1:1
Language	8	s	32	000: English	000: English
				001: Français	001: Français
				002: Español	002: Español
				003: 繁中	003: 繁中
				004: 简中	004: 简中
				005: Português	005: Português
				006: German	006: German
				007: Dutch	007: Dutch
				008: Polish	008: Polish
				009: Russia	009: Russia
				010:Czech	010:Czech
				011:Danish	011:Danish
				012:Swedish	012:Swedish
				013:Italian	013:Italian
				014:Romanian	014:Romanian
				015:Norwegian	015:Norwegian
				016:Finnish	016:Finnish
				017:Greek	017:Greek
				019:Arabic	019:Arabic
				020:Japanse	020:Japanse
				021: Thailand	021: Thailand
				022: Korean	022: Korean
				023 : Hungarian	023 : Hungarian
				024 : Persian	024 : Persian
				025 : Vietnamese	025 : Vietnamese
Sound Mode	8	s	33	001 : Standard	001 : Standard
				002: Class	002: Class
				003: Movie	003: Movie
				004: Meeting	004: Meeting
				005: Custom	005: Custom
Volume	8	s	35	000 ~ 100	000 ~ 100
Mute	8	s	36	000: Off	000: Off

				001: On	001: On
Balance	8	s	39	000~100	000~100
Treble	8	s	37	000~100	000~100
Bass	8	s	38	000~100	000~100
Reomte comtrol command	8	s	40	000 : Vol +	000 : Vol +
				001 : Vol -	001 : Vol -
				010 : Remote up	010 : Remote up
				011 : Remote down	011 : Remote down
				012 : Remote left	012 : Remote left
				013 : Remote right	013 : Remote right
				014 : Remote OK	014 : Remote OK
				020 : Remote Menu Key	020 : Remote Menu Key
				021 : Remote Input source	021 : Remote Input source
				022 : Remote Exit	022 : Remote Exit
				040 : X-Sign	040 : X-Sign
				043 : Android Setting	043 : Android Setting
IR Control	8	s	42	000: Disable	000: Disable
				001: Enable	001: Enable
Button&IR Control	8	s	43	000: Disable	000: Disable
				001: Enable	001: Enable
Button Control	8	s	45	000: Disable	000: Disable
				001: Enable	001: Enable
Pixel Shift	8	s	47	000: Off	000: Off
				001: On	001: On
Picture Mode		s	81	000: Standard	000: Standard
				001: Bright	001: Bright
				002 : Soft	002 : Soft
				003 : Custom	003 : Custom
Backlight	8	s	84	000 ~ 100	000 ~ 100
DCR	8	s	85	000: Off	000: Off
				001: On	001: On
Color Temp	8	s	86	000 : Cool	000 : Cool
				001 : Standard	001 : Standard
				002 : Warm	002 : Warm
RTC Year	8	s	98	000 ~ 099	000 ~ 099

RTC Month	8	s	99	001 ~ 012	001 ~ 012
RTC Day	8	s	9A	001 ~ 031	001 ~ 031
RTC Hour	8	s	9B	000 ~ 023	000 ~ 023
RTC Minute	8	s	9C	000 ~ 059	000 ~ 059
Power Save	8	s	A9	000: Off	000: Off
				001: Low	001: Low
				002: High	002: High
On/Off Timer	14	s	E0	Byte1~Byte9 (1) Byte1: Decide which Timer is selected, and its enable/disable setting. Byte1[3:0]=0x1~0x07. There are totally 7 Timers, this value is used to decide which Timer is selected. Byte1[7]: Reserved, should be 0. Byte1[6]: The Timer is enable or not. Byte1[6]=1 means enable. Byte1[5]: The On Timer is enable or not. Byte1[5]=1 means enable. Byte1[4]: The Off Timer is enable or not. Byte1[4]=1 means enable. (2) Byte2: The Day of the On/Off Timer. bit0 for Sunday, bit1 for Monday, bit2 for Tuesday, bit3 for Wednesday, bit4 for Thursday, bit5 for Friday, bit6 for Saturday, bit7 for Everday. (3) Byte3: The Hour of the On Timer. Byte3=0x00~0x17. (4) Byte4: The Minute of the On Timer. Byte4=0x00~0x3B.	Byte1~Byte9 (1) Byte1: Decide which Timer is selected, and its enable/disable setting. Byte1[3:0]=0x1~0x07. There are totally 7 Timers, this value is used to decide which Timer is selected. Byte1[7]: Reserved, should be 0. Byte1[6]: The Timer is enable or not. Byte1[6]=1 means enable. Byte1[5]: The On Timer is enable or not. Byte1[5]=1 means enable. Byte1[4]: The Off Timer is enable or not. Byte1[4]=1 means enable. (2) Byte2: The Day of the On/Off Timer. bit0 for Sunday, bit1 for Monday, bit2 for Tuesday, bit3 for Wednesday, bit4 for Thursday, bit5 for Friday, bit6 for Saturday, bit7 for Everday. (3) Byte3: The Hour of the On Timer. Byte3=0x00~0x17. (4) Byte4: The Minute of the On Timer. Byte4=0x00~0x3B. (5) Byte5: The Hour of the Off Timer. Byte5=0x00~0x17. (6) Byte6: The Minute of the Off Timer. Byte6=0x00~0x3B.

				(5) Byte5: The Hour of the Off Timer. Byte5=0x00~0x17. (6) Byte6: The Minute of the Off Timer. Byte6=0x00~0x3B. (7) Byte7: Select the Video Source. 0x00=VGA, 0x01=HDMI1, 0x02=HDMI2, 0x03=AV, 0x04=YPbPr, 0x05=S-Video, 0x06=DVI, 0x07=DisplayPort, 0x08=SDI, 0x09=Multi-Media. 0x0A=Network, 0x0B=USB Display (8) Byte8~9 are reserved, and should be 0x00.	(7) Byte7: Select the Video Source. 0x00=VGA, 0x01=HDMI1, 0x02=HDMI2, 0x03=AV, 0x04=YPbPr, 0x05=S-Video, 0x06=DVI, 0x07=DisplayPort, 0x08=SDI, 0x09=Multi-Media. 0x0A=Network, 0x0B=USB Display (8) Byte8~9 are reserved, and should be 0x00.

Get-function listing

The PC can interrogate the LCD Monitor for specific information. The Get-Function packet format consists of 5 bytes which are similar to the Set-Function packet structure. Note that the "Value" byte is always = 00.

Get-function description

Item	Description
Length	Total Bytes of messages excluding "CR"
Display ID	Identification for each of display
Command Type	Identify command type, "g" (0x67h): Get Command
Command	Function command code: One byte ASCII code
Value [1~3]	Three bytes ASCII that defines the value NOTE: To get backlight senor, thermal sensor, and ambient sensor, you need four bytes ASCII that defines the value and the length is 9.
CR	0x0D

Get-function format

Send: (Command Type="g")

Name	Length	ID	Command type	Command	Value1	Value2	Value3	CR
Byte count	1 Byte	2 Byte	1 Byte	1 Byte	1 Byte	1 Byte	1 Byte	1 Byte
Bytes order	1	2~3	4	5	6	7	8	9

Reply: (Command Type="r" or "-")

If the Command is valid, Command Type ="r"

Name	Length	ID	Command type	Command	Value1	Value2	Value3	CR
Byte count	1 Byte	2 Byte	1 Byte	1 Byte	1 Byte	1 Byte	1 Byte	1 Byte
Bytes order	1	2~3	4	5	6	7	8	9

If the Command is Not valid, Command Type="-"

Name	Length	ID	Command type	CR
Byte count	1 Byte	2 Byte	1 Byte	1 Byte
Bytes order	1	2~3	4	5

Example 1: Get Brightness from Display -05 and this command is valid.

The Brightness value is 67.

Send (Hex Format)

Name	Length	ID	Command type	Command	Value1	Value2	Value3	CR
Hex	0x38	0x30 0x35	0x67	0x62	0x30	0x30	0x30	0x0D

Reply (Hex Format)

Name	Length	ID	Command type	Command	Value1	Value2	Value3	CR

Hex	0x38	0x30 0x35	0x72	0x62	0x30	0x36	0x37	0x0D

Example 3: Get Tint from Display -0007 and this command is valid.

The Tint value is 32.

Send (Hex Format)

Name	Length	ID	Command type	Command	Value1	Value2	Value3	CR
Hex	0x38	0x30 0x37	0x67	0X65	0x30	0x30	0x30	0x0D

Reply (Hex Format)

Name	Length	ID	Command type	Command	Value1	Value2	Value3	CR
Hex	0x38	0x30 0x37	0x72	0x65	0x30	0x33	0x32	0x0D

Example 4: Get Tint from Display -07, but the Brightness command ID is error and it is NOT in the command table.

Send (Hex Format)

Name	Length	ID	Command type	Command	Value1	Value2	Value3	CR
Hex	0x38	0x30 0x37	0x67	0XD7	0x30	0x30	0x30	0x0D

Reply (Hex Format)

Name	Length	ID	Command type	CR
Hex	0x34	0x30 0x31	0x2D	0x0D

Example 5: Get backlight sensor from Display -0007 and this command is valid.

The lux value is 1786 (ASCII code).

Send (Hex Format)

Name	Length	ID	Command type	Command	Value1	Value2	Value3	Value4	CR
Hex	0x39	0x30 0x37	0x67	0X6F	0x30	0x30	0x30	0x30	0x0D

Reply (Hex Format)

Name	Length	ID	Command type	Command	Value1	Value2	Value3	Value4	CR
Hex	0x39	0x30 0x37	0x72	0X6F	0x31	0x37	0x38	0x36	0x0D

Example 6: Get ambient sensor from Display -0007 and this command is valid.

The lux value is 1568 (ASCII code).

Send (Hex Format)

Name	Length	ID	Command type	Command	Value1	Value2	Value3	Value4	CR
Hex	0x39	0x30 0x37	0x67	0X70	0x30	0x30	0x30	0x30	0x0D

Reply (Hex Format)

Name	Length	ID	Command type	Command	Value1	Value2	Value3	Value4	CR
Hex	0x39	0x30 0x37	0x72	0X70	0x31	0x35	0x36	0x38	0x0D

Example 7: Get thermal sensor from Display -0007 and this command is valid.

The value is +075 degree (ASCII code).

NOTE: Positive degree is "+"ASCII code and negative degree is "-"ASCII code.

Send (Hex Format)

Name	Length	ID	Command type	Command	Value1	Value2	Value3	Value4	CR
Hex	0x39	0x30 0x37	0x67	0X71	0x30	0x30	0x30	0x30	0x0D

Reply (Hex Format)

Name	Length	ID	Command type	Command	Value1	Value2	Value3	Value4	CR
Hex	0x39	0x30 0x37	0x72	0X71	0x2B	0x30	0x37	0x35	0x0D

Example 8: Get Running Hours from Display -0007 and this command is valid. The value is 21,356 hours (ASCII code).

Send (Hex Format)

Name	Length	ID	Command type	Command	Value1	Value2	Value3	Value4	Value5	CR
Hex	0x3A	0x30 0x37	0x67	0X76	0x30	0x30	0x30	0x30	0x30	0x0D

Reply (Hex Format)

Name	Length	ID	Command type	Command	Value1	Value2	Value3	Value4	Value5	CR
Hex	0x3A	0x30 0x37	0x72	0X76	0x32	0x31	0x33	0x35	0x36	0x0D

PC Get-function command to LCD Monitor

Get Function	Len	ID	Cmd Type	Cmd Code (Hex)	RS232	LAN
Model Info	20	1	g	20	(1) Input value: Byte1 - Byte2 - Byte3…Byte15 Byte2~Byte11=0x00 Byte1=0x01: Get Customer Name Byte1=0x02: Get Customer Model Name Byte1=0x04: Get Scaler Firmware Version Byte1=0x05: Get LAN Firmware Version Byte1=0x06: Get Serial Number (2) Return value: Byte1 - Byte2 -	(1) Input value: Byte1 - Byte2 - Byte3…Byte15 Byte2~Byte11=0x00 Byte1=0x01: Get Customer Name Byte1=0x02: Get Customer Model Name Byte1=0x04: Get Scaler Firmware Version Byte1=0x05: Get LAN Firmware Version Byte1=0x06: Get Serial Number (2) Return value: Byte1 - Byte2 -

					(2) Return value: Byte1 - Byte2 - Byte3…Byte15 The Byte1 value at the return value should be the same as the value of Byte1 at input value. Byte2~Byte15 should be ASCII format. Ex: If Customer=Generic, Byte1=0x01, Byte2='G', Byte3='e',...Byte8='c', Byte9~Byte11=0x00. Ex: If the Scaler Firmware Version=1.02, Byte1=0x03, Byte2='1', Byte3='.', Byte4='0', Byte5='2', Byte6~Byte11=0x00.	Byte3…Byte15 The Byte1 value at the return value should be the same as the value of Byte1 at input value. Byte2~Byte15 should be ASCII format. Ex: If Customer=Generic, Byte1=0x01, Byte2='G', Byte3='e',...Byte8='c', Byte9~Byte11=0x00. Ex: If the Scaler Firmware Version=1.02, Byte1=0x03, Byte2='1', Byte3='.', Byte4='0', Byte5='2', Byte6~Byte11=0x00.
Signal Status	8	1	g	22	000: Signal unstable	000: Signal unstable
					001: Signal stable (Active Sync exists)	001: Signal stable (Active Sync exists)
Treble	8		g	37	000~100	000~100
Bass	8		g	38	000~100	000~100
Balance	8	1	g	39	000~100	000~100
Contrast	8	1	g	61	000 ~ 100	000 ~ 100
Brightness	8	1	g	62	000 ~ 100	000 ~ 100
Sharpness	8		g	63	000 ~ 100	000 ~ 100
Sound Mode	8	1	g	65	001 : Standard	001 : Standard
					002: Class	002: Class
					003: Movie	003: Movie
					004: Meeting	004: Meeting
					005: Custom	005: Custom
Volume	8	1	g	66	000 ~ 100	000 ~ 100
Mute	8	1	g	67	000: Off	000: Off
					001: On	001: On
IR Control	8	1	g	68	000: Disable	000: Disable
					001: Enable	001: Enable
Button&I	8	1	g	69	000: Disable	000: Disable

R Control					001: Enable	001: Enable
Video Source	8	1	g	6A	001 : HDMI	001 : HDMI
					101 : android	101 : android
Power	8	1	g	6C	000 : ---- / Monitor Off	000 :Monitor Off (Blacklight off +mute)
					001 : On / Monitor On	001 :Monitor On (Blacklight on + last status)
					002 : Standby (or android off)	X
Pixel Shift	8	-1	g	72	000: Off	000: Off
					001: On	001: On
Button Control	8	1	g	73	000: Disable	000: Disable
					001: Enable	001: Enable
Operation Time	10	1	g	76	00000 ~ 99999	00000 ~ 99999
Aspect Ratio	8	1	g	77	000 : Full	000 : Full
					002 : 1:1	002 : 1:1
Language	8	1	g	78	000: English	000: English
					001: Français	001: Français
					002: Español	002: Español
					003: 繁中	003: 繁中
					004: 简中	004: 简中
					005: Português	005: Português
					006: German	006: German
					007: Dutch	007: Dutch
					008: Polish	008: Polish
					009: Russia	009: Russia
					010:Czech	010:Czech
					011:Danish	011:Danish
					012:Swedish	012:Swedish
					013:Italian	013:Italian
					014:Romanian	014:Romanian
					015:Norwegian	015:Norwegian
					016:Finnish	016:Finnish
					017:Greek	017:Greek
					019:Arabic	019:Arabic
					020:Japanse	020:Japanse
					021: Thailand	021: Thailand
					022: Korean	022: Korean

					023 : Hungarian	023 : Hungarian
					024 : Persian	024 : Persian
					025 : Vietnamese	025 : Vietnamese
Picture Mode	8	1	g	B1	000: Standard	000: Standard
					001: Bright	001: Bright
					002 : Soft	002 : Soft
					003 : Custom	003 : Custom
Backlight	8	1	g	B4	000 ~ 100	000 ~ 100
DCR	8		g	B5	000: Off	000: Off
					001: On	001: On
Color Temp	8	1	g	B6	000 : Cool	000 : Cool
					001 : Standard	001 : Standard
					002 : Warm	002 : Warm
RTC Year	8	1	g	C8	000 ~ 099	000 ~ 099
RTC Month	8	1	g	C9	001 ~ 012	001 ~ 012
RTC Day	8	1	g	CA	001 ~ 031	001 ~ 031
RTC Hour	8	1	g	CB	000 ~ 023	000 ~ 023
RTC Minute	8	1	g	CC	000 ~ 059	000 ~ 059
WOL	8		g	D8	000: Off	000: Off
					001: On	001: On
Power Save	8	1	g	D9	000: Off	000 : Off
					001: Low	001 : Low
					002: High	002 : High

On/Off Timer	14	0	g	E0	Input value: Byte1 - Byte2 - Byte3…Byte9 (1) Byte1[3:0]: The Number of the On/Off Timer. There are totally 7 On/Off Timers, and this byte is used to selected which timer is going to be accessed. (2) Byte1[7:4] is reserved, should be 0. (3) Byte2~9 are reserverd, should be 0x00. Return value: Byte1 - Byte2 - Byte3…Byte9 (1) Byte1[3:0]: Should retuen the same value as Byte1 at Input value. Byte1[7]: Reserved, should be 0. Byte1[6]: The Timer is enable or not. Byte1[6]=1 means enable. Byte1[5]: The On Timer is enable or not. Byte1[5]=1 means enable. Byte1[4]: The Off Timer is enable or not. Byte1[4]=1 means enable. (2) Byte2: The Day of the On/Off Timer. bit0 for Sunday, bit1 for Monday, bit2 for Tuesday, bit3 for Wednesday, bit4 for Thursday, bit5 for Friday, bit6 for Saturday, bit7 for Everday. (3) Byte3: The Hour of the On Timer. Byte3=0x00~0x17. (4) Byte4: The Minute of the On Timer. Byte4=0x00~0x3B.	Input value: Byte1 - Byte2 - Byte3…Byte9 (1) Byte1[3:0]: The Number of the On/Off Timer. There are totally 7 On/Off Timers, and this byte is used to selected which timer is going to be accessed. (2) Byte1[7:4] is reserved, should be 0. (3) Byte2~9 are reserverd, should be 0x00. Return value: Byte1 - Byte2 - Byte3…Byte9 (1) Byte1[3:0]: Should retuen the same value as Byte1 at Input value. Byte1[7]: Reserved, should be 0. Byte1[6]: The Timer is enable or not. Byte1[6]=1 means enable. Byte1[5]: The On Timer is enable or not. Byte1[5]=1 means enable. Byte1[4]: The Off Timer is enable or not. Byte1[4]=1 means enable. (2) Byte2: The Day of the On/Off Timer. bit0 for Sunday, bit1 for Monday, bit2 for Tuesday, bit3 for Wednesday, bit4 for Thursday, bit5 for Friday, bit6 for Saturday, bit7 for Everday. (3) Byte3: The Hour of the On Timer. Byte3=0x00~0x17. (4) Byte4: The Minute of the On Timer. Byte4=0x00~0x3B. (5) Byte5: The Hour of the Off Timer. Byte5=0x00~0x17. (6) Byte6: The Minute of the Off Timer. Byte6=0x00~0x3B. (7) Byte7: Select the Video Source. 0x00=VGA, 0x01=HDMI1, 0x02=HDMI2, 0x03=AV,

					(5) Byte5: The Hour of the Off Timer. Byte5=0x00~0x17. (6) Byte6: The Minute of the Off Timer. Byte6=0x00~0x3B. (7) Byte7: Select the Video Source. 0x00=VGA, 0x01=HDMI1, 0x02=HDMI2, 0x03=AV, 0x04=YPbPr, 0x05=S-Video, 0x06=DVI, 0x07=DisplayPort, 0x08=SDI, 0x09=Multi-Media. 0x0A=Network, 0x0B=USB Display 0xFF=Default. Other values are reserved. (8) Byte8~9 are reserved, and should be 0x00.	0x04=YPbPr, 0x05=S-Video, 0x06=DVI, 0x07=DisplayPort, 0x08=SDI, 0x09=Multi-Media. 0x0A=Network, 0x0B=USB Display 0xFF=Default. Other values are reserved. (8) Byte8~9 are reserved, and should be 0x00.
Network Setting	14		g	E1	Input Value: Byte1 - Byte2 - Byte3…Byte9 (1) Byte1=0x00: IP Setup Mode Byte1=0x01: IP Address Byte1=0x02: Get Subnet Mask Byte1=0x03: Default Gateway Byte1=0x04: Primary DNS Byte1=0x05: Secondary DNS Byte1=0x06: MAC	Input Value: Byte1 - Byte2 - Byte3…Byte9 (1) Byte1=0x00: IP Setup Mode Byte1=0x01: IP Address Byte1=0x02: Get Subnet Mask Byte1=0x03: Default Gateway Byte1=0x04: Primary DNS Byte1=0x05: Secondary DNS Byte1=0x06: Current connecting NIC MAC Address Byte1=0x07: Ethernet (RJ45) MAC Addess (2) Byte2~9 are reserved, should be 0x00.

					Address (2) Byte2~9 are reserved, should be 0x00. Return value: Byte1 - Byte2 - Byte3…Byte9 The Byte1 at the return value should be the same as the value of Byte1 at Input value. Byte2~Byte15 should be hex value format (1) If Byte1=0x00(IP Setup Mode) at Input value, the return value should be Byte1=0x00 Byte2=0x00: Manual 0x01: DHCP Byte3~9 are reserved, should be 0x00. (2) If Byte1=0x01(IP Address) at Input value, the return value should be Ex: IP address=169.254.81.38 Byte1=0x01 (same as Byte1 at Input value) Byte2=0xA9 (=169), Byte3=0xFE (=254), Byte4=0x51(=81), Byte5=0x26 (=38) Byte6~9 are reserved, should be 0x00. (3) If Byte1=0x02~0x05 at Input value, refer to (2) (4) If Byte1=0x06(MAC Address) at Input value, the return value should be Ex: MAC address=00:22:64:7E:2C:82	Return value: Byte1 - Byte2 - Byte3…Byte9 The Byte1 at the return value should be the same as the value of Byte1 at Input value. Byte2~Byte15 should be hex value format (1) If Byte1=0x00(IP Setup Mode) at Input value, the return value should be Byte1=0x00 Byte2=0x00: Manual 0x01: DHCP Byte3~9 are reserved, should be 0x00. (2) If Byte1=0x01(IP Address) at Input value, the return value should be Ex: IP address=169.254.81.38 Byte1=0x01 (same as Byte1 at Input value) Byte2=0xA9 (=169), Byte3=0xFE (=254), Byte4=0x51(=81), Byte5=0x26 (=38) Byte6~9 are reserved, should be 0x00. (3) If Byte1=0x02~0x05 at Input value, refer to (2) (4) If Byte1=0x06(MAC Address) at Input value, the return value should be Ex: MAC address=00:22:64:7E:2C:82 Byte1=0x06 (same as Byte1 at Input value) Byte2=0x00, Byte3=0x22, Byte4=0x64, Byte5=0x7E, Byte6=0x2C, Byte7=0x82 Byte8~9 are reserved, should

					Byte1=0x06 (same as Byte1 at Input value) Byte2=0x00, Byte3=0x22, Byte4=0x64, Byte5=0x7E, Byte6=0x2C, Byte7=0x82 Byte8~9 are reserved, should be 0x00.	be 0x00.