Electrolux PROFESSIONAL

Libero Line Series
Cast Iron Panini Grill - 1 1/2 Zone

ITEM #

MODEL #

NAME #

SIS #

AIA #



602120 - 602121 - 602122

Short Form Specification

Item No.

Panini grill with top and bottom ribbed cast iron plates. The cooking surface has a vitreous enamel coating against scratches and rust as well as being acid and salt proof, resistant to oxidation. Self-balancing upper plates adjustable to different heights. Cooking surface 355x255mm. Integrated thermostat with adjustable temperature up to 300°C. Shock-proof heating coils for uniform cooking throughout. Stainless steel chassis. Collection tray for grease and crumbs.

Main Features

- Available in 3 different versions:
  -top and bottom ribbed surface
  -top and bottom smooth surface
  -top ribbed surface and bottom smooth surface
- Made of stainless steel AISI 430 and the cooking surface is made of a special cast iron treated with verified food enamel, this guarantees hygienic conditions and high resistance to acids, salts and oxidation processes.
- Shock-proof heating elements mounted inside the plate for a perfect thermal conductivity.
- Adjustable thermostat up to 300 °C
- Self-balancing upper plate adjusts to different heights to reduce cooking times and double performance.
- Top plate shut-off switch standard.

APPROVAL:

Electrolux PROFESSIONAL
Libero Line Series
Cast Iron Panini Grill - 1 1/2 Zone

Libero Line Series
Cast Iron Panini Grill - 1 1/2 Zone

Front

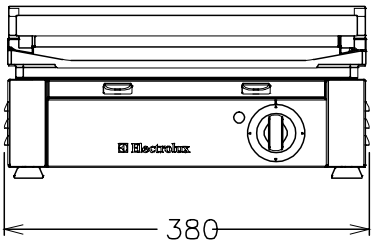

Side

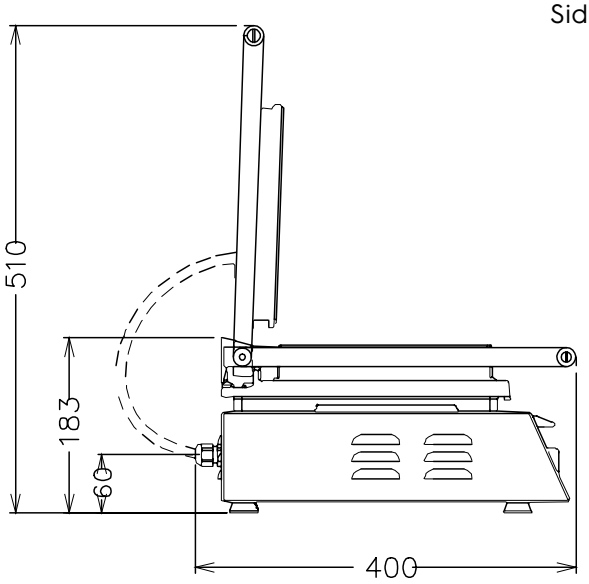

EI = Electrical inlet (power)
EO = Electrical Outlet

Top

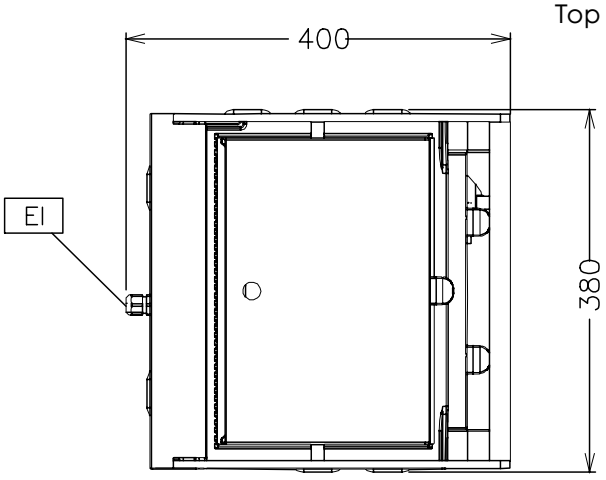

Electric

Supply voltage:	
602120 (PGRR2)	230 V/1 ph/50 Hz
602121 (PGRS2)	230 V/1 ph/50/60 Hz
602122 (PGSS2)	230 V/1 ph/50 Hz
Total Watts:	2.05 kW

Key Information:

Cooking surface dimension:	
602120 (PGRR2)	355 x 255 mm
602121 (PGRS2)	355 x 255 mm
602122 (PGSS2)	355 x 255 mm
External dimensions, Width:	380 mm
External dimensions, Height:	235 mm
External dimensions, Depth:	435 mm
Net weight:	21 kg
Plug Type	1phase: Schuko; 3phase: CEE

When cooking meat products, the top plate should be in contact with the food surface.

FIRST USE OF THE MACHINE

- When the machine is delivered, the steel surfaces are protected with a nylon anti-scratch film. This film has to be removed.
- The insulating materials used during the manufacturing and the residuals of grease due to the mechanical installation of single parts, heat and produce smoke, for this reason, **it is necessary to start the machine at maximum temperature for 15-20 minutes.**

GENERAL CLEANING

- Clean the grill at least once a day and, if necessary more often.
- All the machine parts that are in contact with the product must be cleaned.
- Never clean the machine by means of compressed water or water jets.
- Cleaning can be performed when surface is hot, scrape with a metallic brush on the cooking grid several times.
- Empty the grease tray.
- It is advisable to perform these cleaning operations when the grill temperature is at minimum so that the residual grease that sticks to the grid can melt.
- Do not pour water or other liquids on the grill when it is hot, because the changes of temperature can provoke their breaking.

The company reserves the right to make modifications to the products without prior notice. All information correct at time of printing.

2019.09.09