PHILIPS

Lighting



High Power GearUnits

ECP330 2xSON-T600W 230-240V

GearUnits - 2 pcs - SON-T - 600 W

Philips is one of the few companies able to provide total floodlight system solutions comprising all necessary elements – floodlight, lamp source and control gear unit. Our innovative high-power GearUnits are designed to meet our customers' need for a compact gear solution that is completely ready for installation. The pre-wired high-power control gear units are intended for use in combination with floodlights that are suitable for high-wattage HID lamps and cannot integrate electrical components because of limited space or high temperatures. A gear unit contains all electrical components (ballast, ignitors, capacitors), wiring and terminal blocks needed to ensure initial lamp ignition and proper operation of the lamp in stabilized current. The electromagnetic high-power GearUnits are available in both IP20 (ECB330) and IP65 (ECP330) versions. Within the GearUnits family there is also an electronic flicker-free ballast version (ECM330) available in IP20, which is suitable for the MVF403 MHN-LA 1000 W and MVF404 MHN-SE HO 2000 W ArenaVision floodlights. The ArenaVision floodlight family is specially designed for TV broadcasts from indoor and outdoor sports facilities. Electronic-ballast GearUnits completely eliminate the flicker effect, thereby guaranteeing perfect images filmed with super-slow-motion cameras.

Product data

General Information	
Number of light sources	2 pcs
Lamp family code	SON-T [SON-T]
Lamp power	600 W
Compensation circuit	Inductive parallel compensated
Number of gear units	2 units
Gear	CONV [Conventional]
Electrical circuit protection	-

Connection	Screw connection block 3-pole
Flammability mark	For mounting on normally flammable surfaces
CE mark	CE mark
ENEC mark	-
Product family code	ECP330 [GearUnits]

Operating and Electrical	
Input Voltage	230 to 240 V

High Power GearUnits

Input Frequency	50 Hz
Ignitor	-

Controls and Dimming

Dimmable	No

Mechanical and Housing

Housing Material	Aluminum
Color	Silver
Dimensions (Height x Width x Depth)	NaN x NaN x NaN mm (NaN x NaN x NaN in)

Approval and Application

Ingress protection code	IP65 [Dust penetration-protected, jet-proof]
Mech. impact protection code	IK10 [20 J vandal-resistant]
Energy Efficiency Index	A3

Initial Performance (IEC Compliant)

Initial input power	1284 W

Application Conditions

Ambient temperature range	-30 to +55 °C

Product Data

Full product code	871829106283700
Order product name	ECP330 2xSON-T600W 230-240V
EAN/UPC - Product	8718291062837
Order code	910925726712
Numerator - Quantity Per Pack	1
Numerator - Packs per outer box	1
Material Nr. (12NC)	910925726712
Net Weight (Piece)	18.700 kg

Dimensional drawing

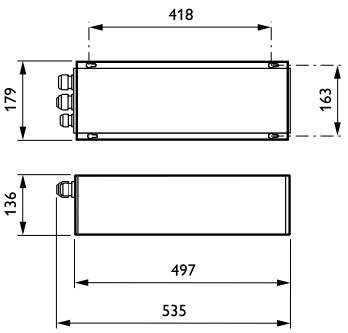

GearUnits ECB330/ECP330

© 2019 Signify Holding All rights reserved. Signify does not give any representation or warranty as to the accuracy or completeness of the information included herein and shall not be liable for any action in reliance thereon. The information presented in this document is not intended as any commercial offer and does not form part of any quotation or contract, unless otherwise agreed by Signify. Philips and the Philips Shield Emblem are registered trademarks of Koninklijke Philips N.V.