DATASHEET - U-PKZ0(240V50HZ)



Undervoltage release, 240V50Hz

Part no.	**U-PKZ0(240V50HZ)**
Catalog No.	**073136**
Alternate Catalog No.	**XTPAXUVR240V50H**

Powering Business Worldwide™

Delivery program

Product range			Accessories
Accessories			Undervoltage release
Actuating voltage			240 V 50 Hz
Voltage type			Standard voltage
Current actuation			AC
Contact sequence			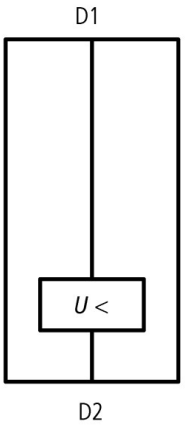
Connection technique			Screw terminals
For use with			Undervoltage release PKZ0(4), PKE
For use with			PKZM0 PKZM4 PKZM0-T PKM0 PKZM01 PKE

Notes

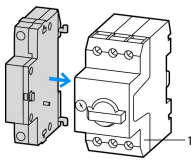

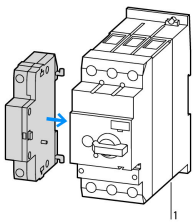

1 Motorschutzschalter

Notes Can be fitted to the left of:
Motor protective circuit-breaker
Cannot be combined with:
A-PKZ0 shunt release
When combined with circuit-breaker can be used as emergency switching-off device according to EN 60204.

Notes Can be fitted to left side of the motor protection switch
Cannot be combined with shunt release A-PKZ0
When combined with circuit breaker, can be used as EMERGENCY STOP device in accordance with IEC/EN 60204

Technical data

General

Terminal capacities		mm^2	
Solid or flexible conductor, with ferrule		mm^2	1 x (0,75 - 2,5) 2 x (0,75 - 2,5)
Solid or stranded		AWG	1 x (18 - 14)

			2 x (18 - 14)
Actuating voltage			240 V 50 Hz

Pick-up-/drop-out voltage

Pick-up voltage		x U_c	0,85 - 1,1
Drop-out voltage		x U_c	0,7- 0,35

Power consumption

AC			
Pull-in power	Pick-up	VA	5
Sealing power	Sealing	VA	3

Design verification as per IEC/EN 61439

Technical data for design verification			
Rated operational current for specified heat dissipation	I_n	A	0
Heat dissipation per pole, current-dependent	P_{vid}	W	0
Equipment heat dissipation, current-dependent	P_{vid}	W	0
Static heat dissipation, non-current-dependent	P_{vs}	W	0.5
Heat dissipation capacity	P_{diss}	W	0
Operating ambient temperature min.		°C	-25
Operating ambient temperature max.		°C	55
IEC/EN 61439 design verification			
10.2 Strength of materials and parts			
10.2.2 Corrosion resistance			Meets the product standard's requirements.
10.2.3.1 Verification of thermal stability of enclosures			Meets the product standard's requirements.
10.2.3.2 Verification of resistance of insulating materials to normal heat			Meets the product standard's requirements.
10.2.3.3 Verification of resistance of insulating materials to abnormal heat and fire due to internal electric effects			Meets the product standard's requirements.
10.2.4 Resistance to ultra-violet (UV) radiation			Meets the product standard's requirements.
10.2.5 Lifting			Does not apply, since the entire switchgear needs to be evaluated.
10.2.6 Mechanical impact			Does not apply, since the entire switchgear needs to be evaluated.
10.2.7 Inscriptions			Meets the product standard's requirements.
10.3 Degree of protection of ASSEMBLIES			Does not apply, since the entire switchgear needs to be evaluated.
10.4 Clearances and creepage distances			Meets the product standard's requirements.
10.5 Protection against electric shock			Does not apply, since the entire switchgear needs to be evaluated.
10.6 Incorporation of switching devices and components			Does not apply, since the entire switchgear needs to be evaluated.
10.7 Internal electrical circuits and connections			Is the panel builder's responsibility.
10.8 Connections for external conductors			Is the panel builder's responsibility.
10.9 Insulation properties			
10.9.2 Power-frequency electric strength			Is the panel builder's responsibility.
10.9.3 Impulse withstand voltage			Is the panel builder's responsibility.
10.9.4 Testing of enclosures made of insulating material			Is the panel builder's responsibility.
10.10 Temperature rise			The panel builder is responsible for the temperature rise calculation. Eaton will provide heat dissipation data for the devices.
10.11 Short-circuit rating			Is the panel builder's responsibility. The specifications for the switchgear must be observed.
10.12 Electromagnetic compatibility			Is the panel builder's responsibility. The specifications for the switchgear must be observed.
10.13 Mechanical function			The device meets the requirements, provided the information in the instruction leaflet (IL) is observed.

Technical data ETIM 7.0

Low-voltage industrial components (EG000017) / Under voltage coil (EC001022)			
Electric engineering, automation, process control engineering / Low-voltage switch technology / Circuit breaker (LV < 1 kV) / Undervoltage trip (ecl@ss10.0.1-27-37-04-17 [AKF015013])			
Rated control supply voltage Us at AC 50HZ		V	240 - 240
Rated control supply voltage Us at AC 60HZ		V	0 - 0
Rated control supply voltage Us at DC		V	0 - 0
Voltage type for actuating			AC
Type of electric connection			Screw connection

Number of contacts as normally open contact	0
Number of contacts as normally closed contact	0
Number of contacts as change-over contact	0
Delayed	No
Suitable for power circuit breaker	No
Suitable for off-load switch	No
Suitable for motor safety switch	Yes
Suitable for overload relay	No

Approvals

Product Standards	UL 508; CSA-C22.2 No. 14; IEC60947-4-1; CE marking
UL File No.	E36332
UL Category Control No.	NLRV
CSA File No.	165628
CSA Class No.	3211-05
North America Certification	UL listed, CSA certified
Specially designed for North America	No

Characteristics

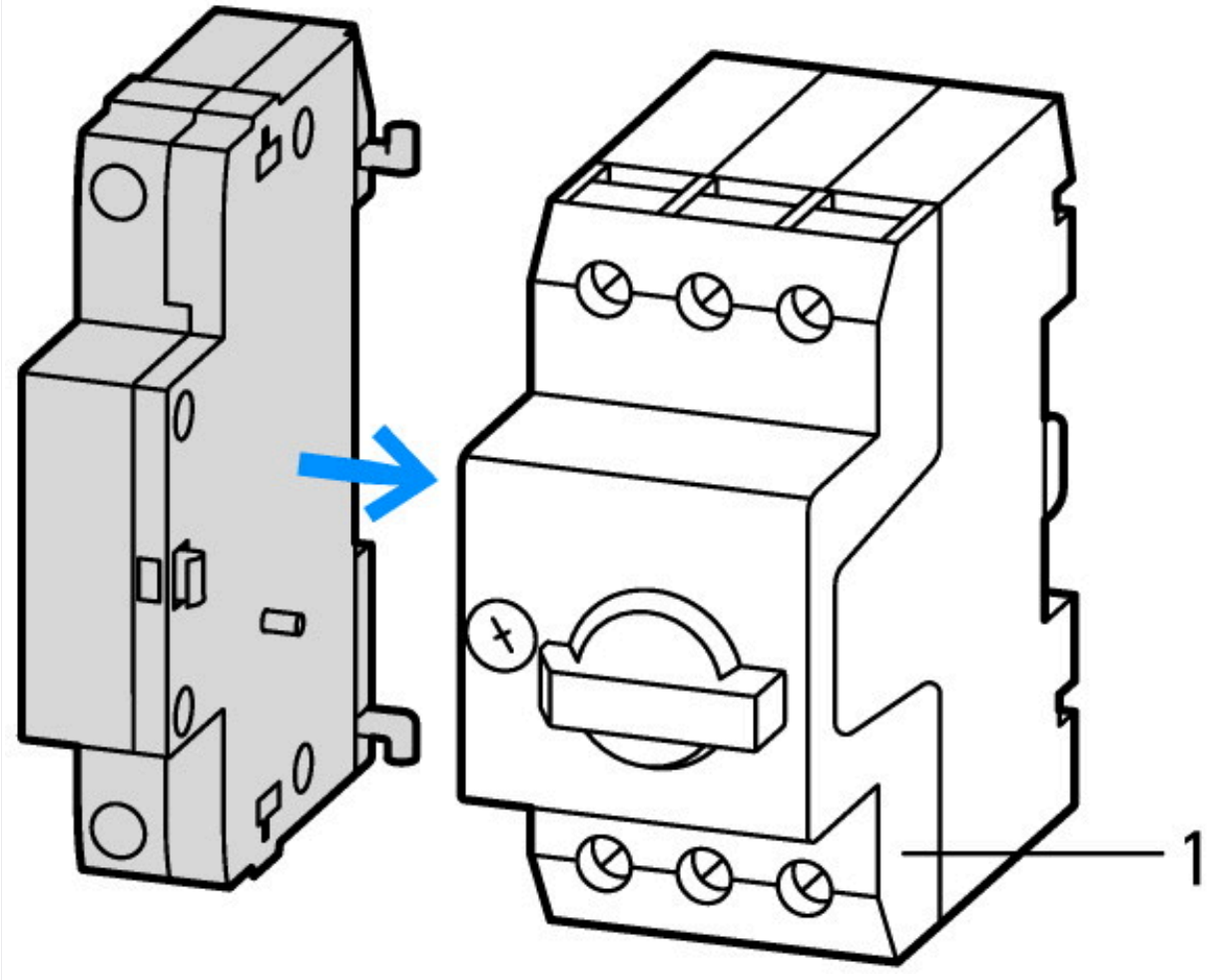

1: Motor-protective circuit-breakers

Dimensions

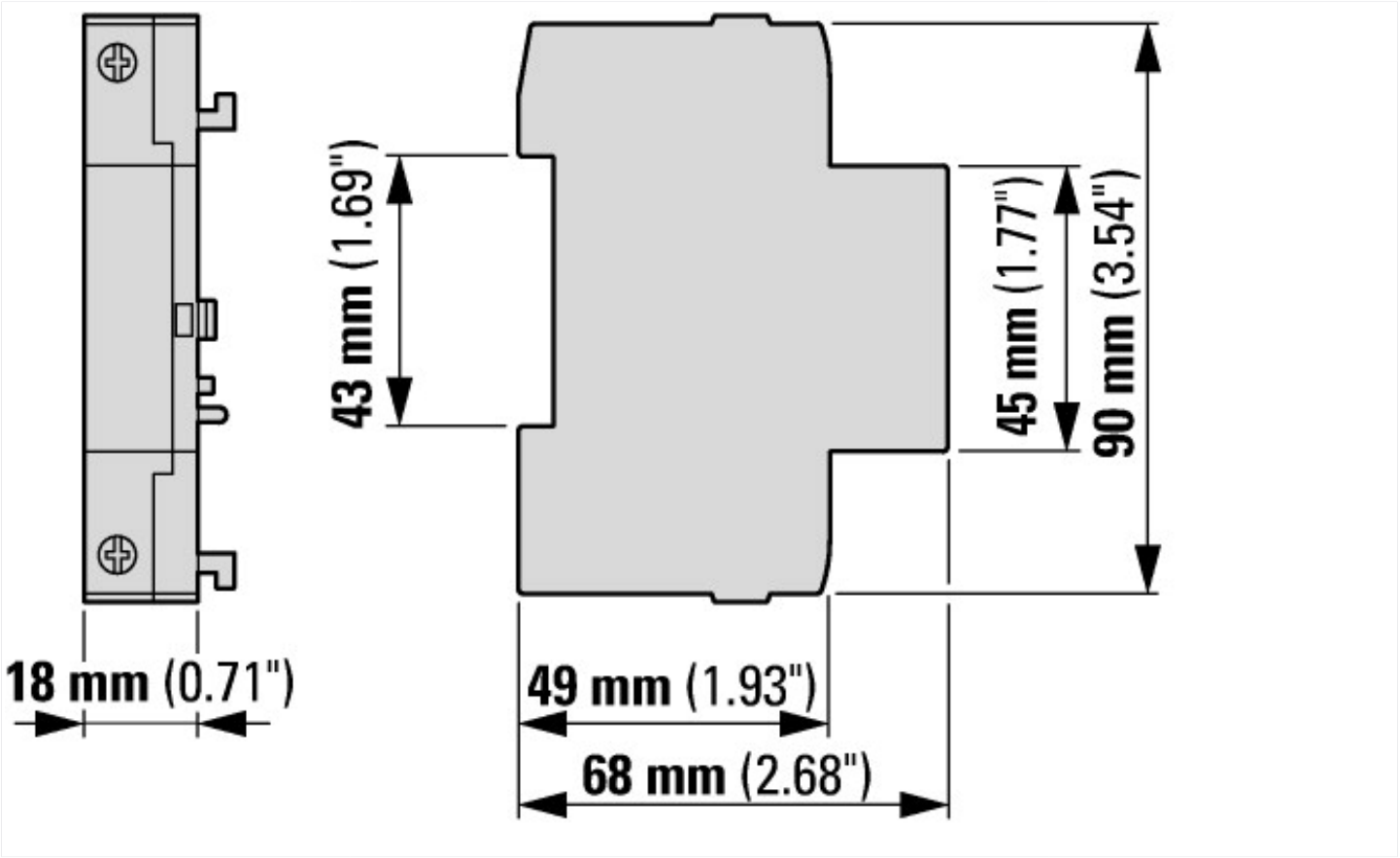

Assets (links)

Declaration of CE Conformity

00002851

Instruction Leaflets

IL03402034Z2018_06

Additional product information (links)

IL03402034Z (AWA1210-1945) Motor-protective circuit-breaker, Starter	
IL03402034Z (AWA1210-1945) Motor-protective circuit-breaker, Starter	ftp://ftp.moeller.net/DOCUMENTATION/AWA_INSTRUCTIONS/IL03402034Z2018_06.pdf
IL03407011Z (AWA1210-1925) Motor-protective circuit-breaker	
IL03407011Z (AWA1210-1925) Motor-protective circuit-breaker	ftp://ftp.moeller.net/DOCUMENTATION/AWA_INSTRUCTIONS/IL03407011Z2018_04.pdf
Motor starters and "Special Purpose Ratings" for the North American market	http://www.eaton.eu/ecm/groups/public/@pub/@europe/@electrical/documents/content/pct_3258146.pdf
Busbar Component Adapters for modern Industrial control panels	http://www.moeller.net/binary/ver_techpapers/ver960en.pdf

© 07/2019 by Eaton Industries GmbH